CITADEL: Europa Surface Simulation

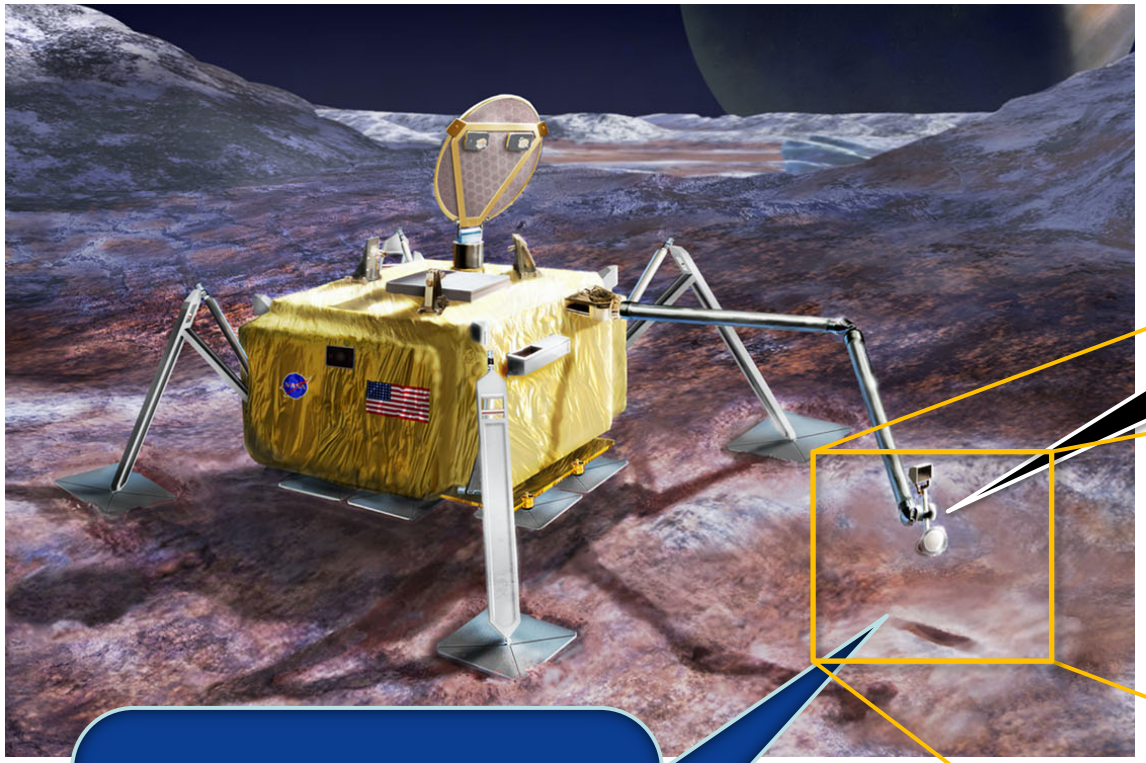

Surface Interaction
- Create trench > 10 cm depth
- Collect 7 cc of material
- Transprt & deliver sample for analysis
- Maintain sample at temp < 150 K

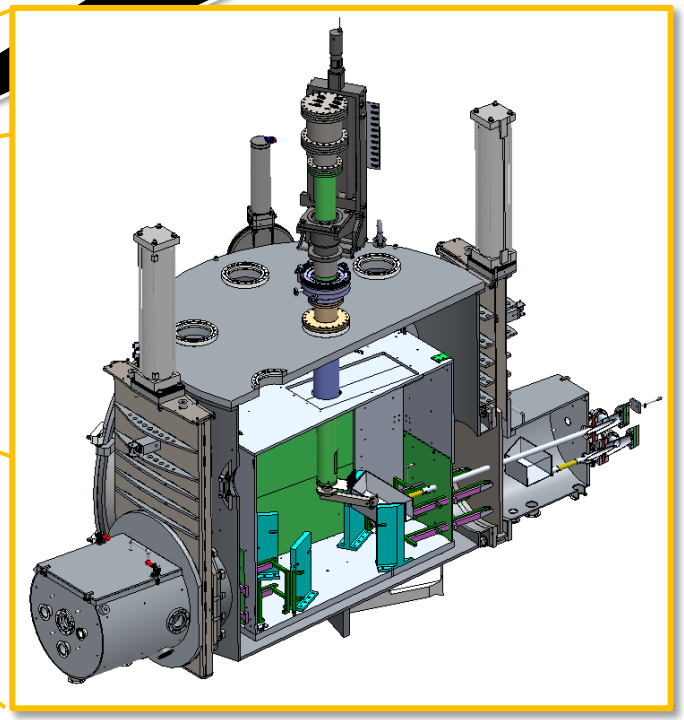

Challenging Environment
- Unknown surface topography (potentially rough at all scales)
- Unknown material properties (potentially with reactive constituents)
- Cryogenic surface temps (70–130 K)

Authors:
Chris Sercel
Dan Berisford
Tom Green
Eric Roberts

Jet Propulsion Laboratory, California Institute of Technology

Copyright 2018 California Institute of Technology. U.S. Government sponsorship acknowledged.
Pre-Decisional Information – For Planning and Discussion Purposes Only