Progress on single-footprint retrievals from AIRS

Bill Irion
Jet Propulsion Laboratory
California Institute of Technology

With thanks to
Qing Yue
Sergio DeSouza-Machado
and the AIRS team.

Copyright 2018 California Institute of Technology. Government sponsorship acknowledged.

Single Footprint Retrievals from AIRS L1b Spectra

- Uses AIRS L1b directly – no microwave and no cloud-clearing
- 13.5 km horizontal resolution at nadir, but no retrieval below thick clouds
- SARTA forward model + Delta-4-Stream cloud calculation (*Strow et al.*, 2003; *Ou et al.*, 2013)
- Simultaneous optimal estimation retrieval (TES heritage; *Bowman et al., 2006*)
  - surface temperature,
  - cloud-top temperature, cloud optical depth and particle size
  - profiles of temperature, water vapor
- MODIS L2 cloud properties (averaged on AIRS footprint) used as cloud *a priori*
- ECMWF 6hr analyses used for surface, temperature and water vapor profile *a priori*

Granule 44
Sept 6, 2002
(Subtropical Western Pacific. Note tropical cyclone to west)

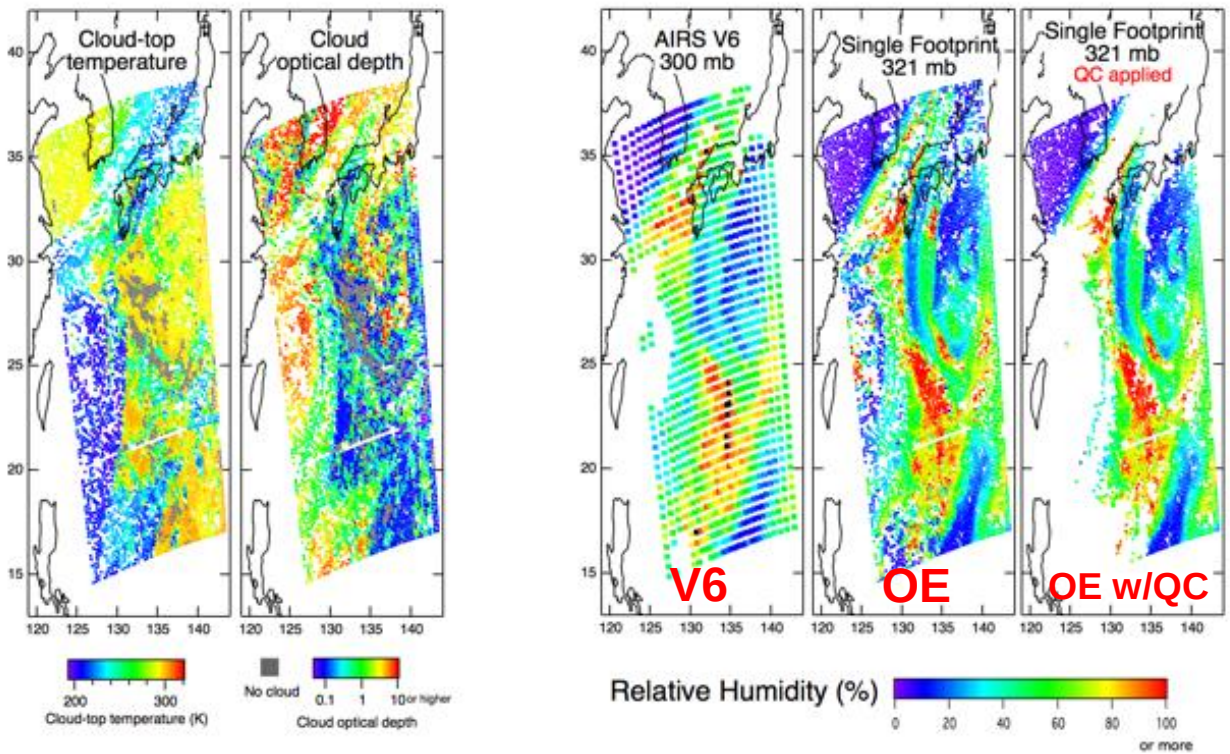

Irion, F. W., et al.: Single-footprint retrievals of temperature, water vapor and cloud properties from AIRS, Atmos. Meas. Tech., 2018.

Clouds often not realistic in current forward model in AIRS-OE

- Delta-4-Stream scattering code outputs cloud at only a single temperature, wedged into a single forward model layer.
  - OK for thin clouds, but upwelling radiance biases for thick clouds?
  - Many failed retrievals above high thick clouds
- Maximum one cloud in an AIRS footprint
- No aerosol calculations
- Problems from with ozone 10 micron band using L1b directly
  - Newer version of SARTA helps with this.

Current work in progress is to adapt forward model of DeSouza-Machado et al. ("SARTA TwoSlab") *Atmos. Meas. Tech.*, 2018

- Ability to use 2 clouds or cloud/aerosol combination over multiple layers.
  - Would open up more footprints for retrieval
- Work in progress to integrate SARTA TwoSlab Fortran into AIRS-OE retrieval
  - Conversion from executable to callable subroutine finished and tested.

Make the code faster ….??

- SARTA Two-Slab (thanks Sergio!) converted from F77 to F90.
  - Now a callable library from python (or anything else)

- Several subroutines “modularized” to save data between calls from Levenberg-Marquardt solver
  - Stores predictors between calls, recalculating them only when needed.
  - Used to avoid redundancies while calculating finite-difference Jacobians.
    - e.g., don’t recalculate temperature predictors if only ozone changes.
  - Saves about 20% of time needed for a retrieval

- Can use either “Two-Slab” or “D4S” cloud representation
  - D4S cloud transmissivities calculated externally and passed as argument.

- Big time sink (~4s) is averaging MODIS cloud properties on AIRS spatial response footprint
  - Currently uses Matplotlib mapping libraries for this. Faster alternatives?

Use of sub-layers in SARTA-D4S cloud representation?

(H/T: Qing)

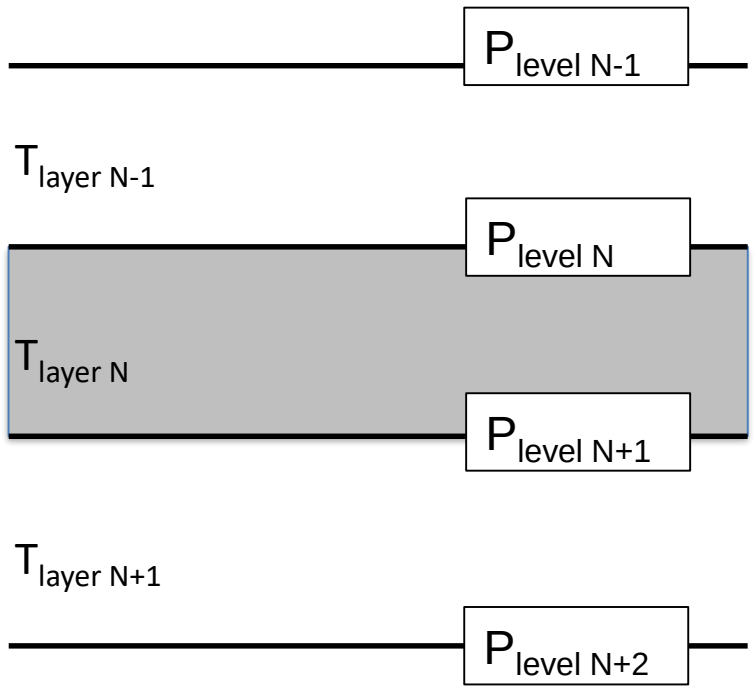

Current method is to fill cloud in single layer if that's where its cloud-top temperature should lie.

Planck functions calculated from layer temperature.

Use of sub-layers in SARTA-D4S cloud representation?

(H/T: Qing)

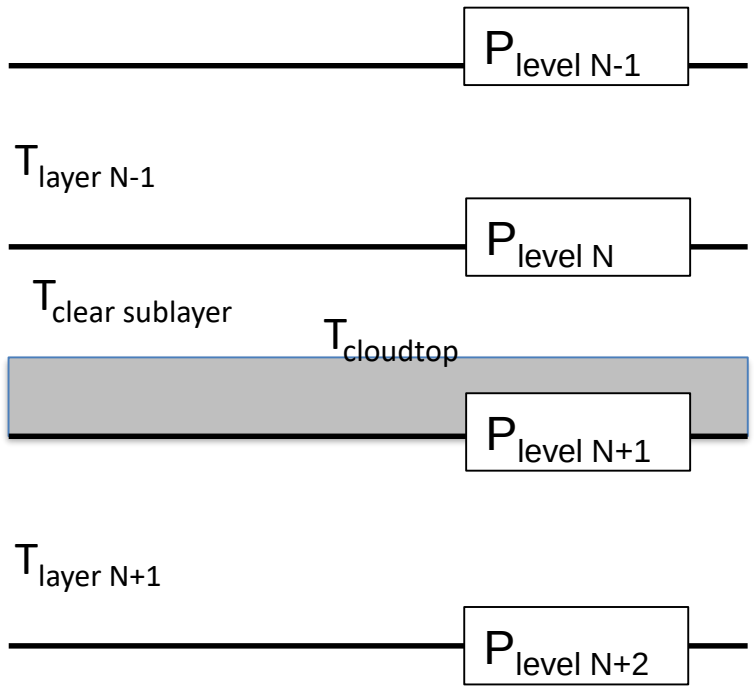

Alternative method is to split the cloudy layer (the depth of which depends on the cloud-top temperature)

Calculate the transmissivities of the clear and cloudy sub-layers.

Planck functions calculated from clear sublayer and cloud-top temperatures.

Overall transmissivity doesn't change, but the upward and downward radiance calculations do.

Granule 44, Sept. 6, 2002 918mb

RH w/o sublayering

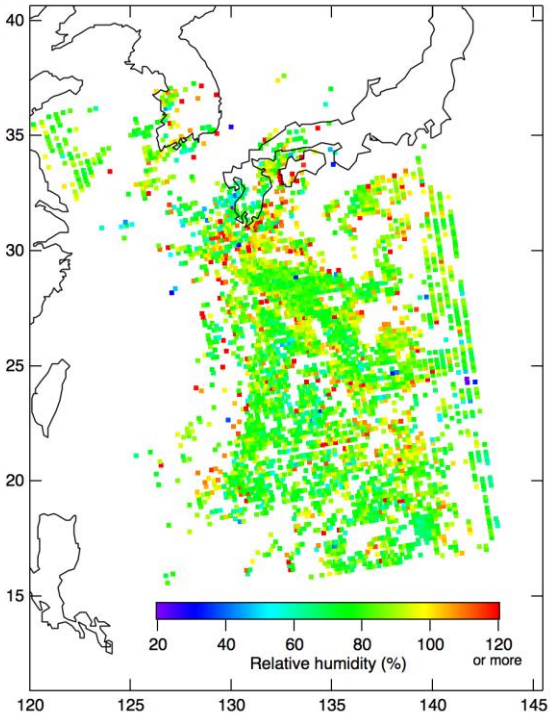

RH with sublayering

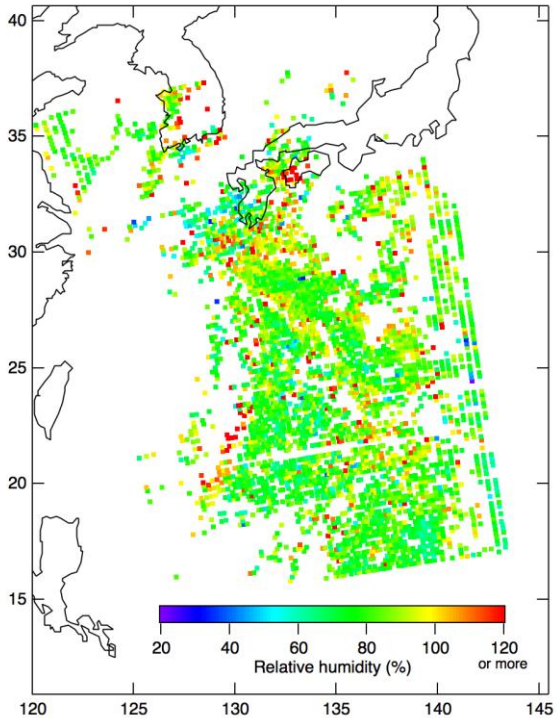

Histograms

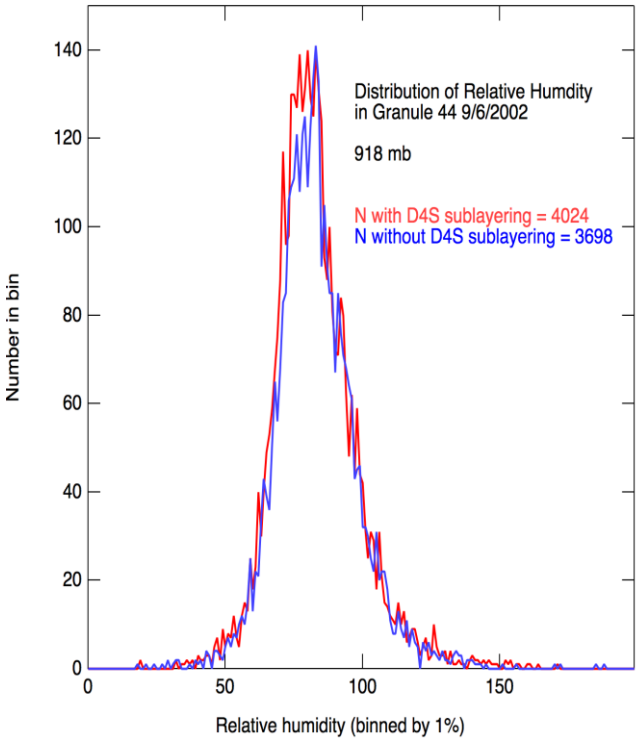

Distribution of RH doesn't change much, but QC-passed yield goes up…

MAGIC sonde comparison

Older version of SARTA
No sublayering for clouds
210 sondes, 8633 observations

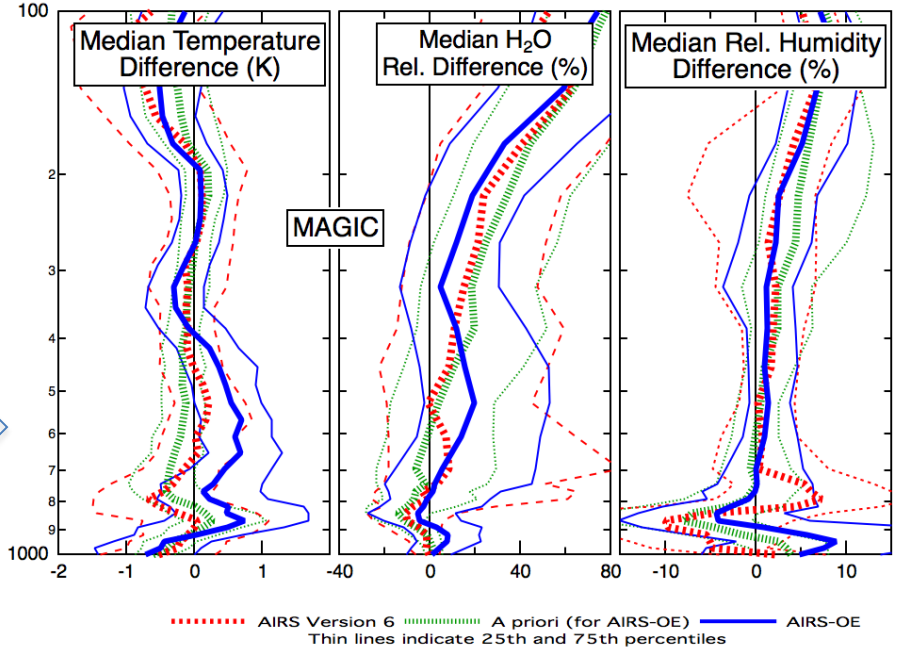

Newer (F90) version of SARTA
With sublayering for clouds
212 sondes, 10471 observations

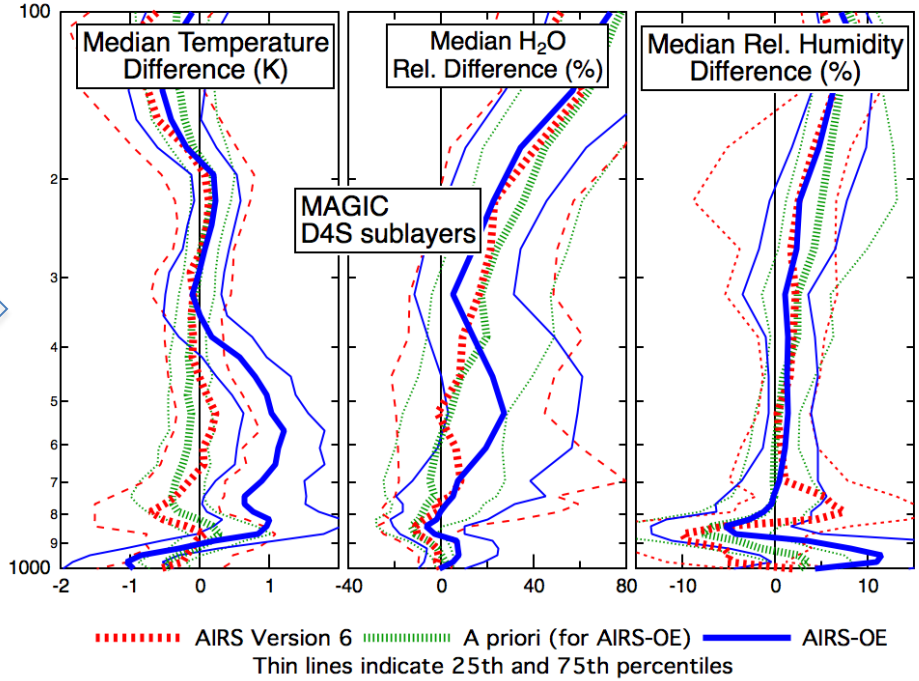

Incorporation of SARTA TwoSlab into OE retrieval

Work In Progress!!!!

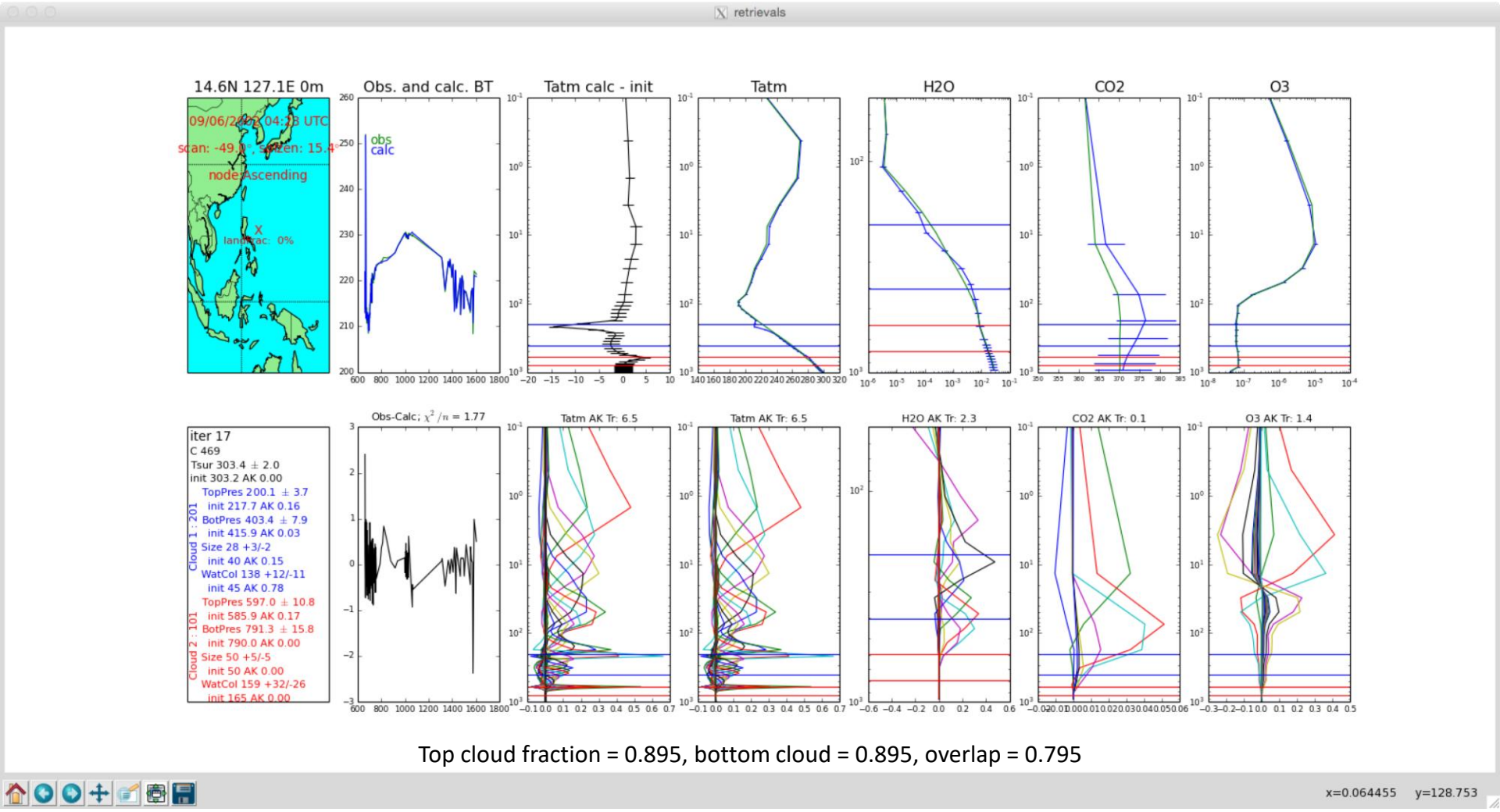

Top cloud fraction = 0.895, bottom cloud = 0.895, overlap = 0.795

ECMWF a priori for clouds – big dependence on cloud fraction and overlap

Incorporation of SARTA TwoSlab into OE retrieval

Work In Progress!!!!

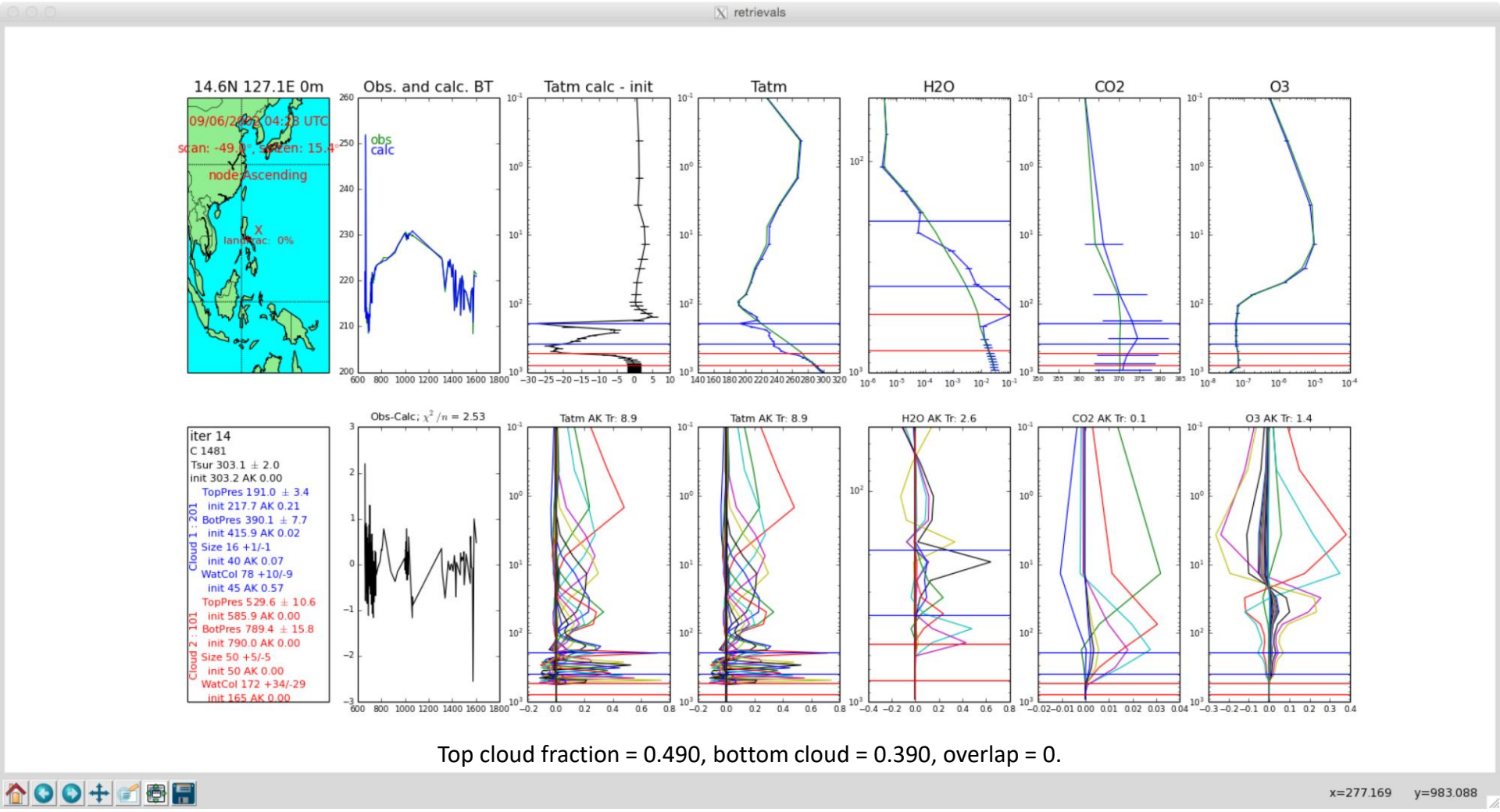

Top cloud fraction = 0.490, bottom cloud = 0.390, overlap = 0.

ECMWF a priori for clouds – big dependence on cloud fraction and overlap

Moving forward …

- Continue testing of using sublayers in SARTA-D4S.
- Fix bugs, constraints etc. of OE retrieval using SARTA TwoSlab approach.
  - Add in MODIS information?
    - Only gives data on top-most clouds
    - May be useful to constrain total cloud fraction.
    - Needs faster implementation of MODIS cloud averaging over AIRS spatial response
- Add in AMSU data for joint AIRS-AMSU retrieval?
  - Cross-platform retrievals shown for ozone by Dejian Fu.
  - Use HSB in demonstration?