2018 IEEE SYMPOSIUM ON ELECTROMAGNETIC COMPATIBILITY, SIGNAL AND POWER INTEGRITY

EMC+SIPI 2018

July 30 – August 3, 2018 *Long Beach, CA*

Your Port for EMC+SIPI Compliance

EMC+SIPI 2018
July 30 – August 3, 2018 Long Beach, CA
2018 IEEE SYMPOSIUM ON ELECTROMAGNETIC COMPATIBILITY, SIGNAL AND POWER INTEGRITY
YOUR PORT FOR EMC+SIPI COMPLIANCE

Input Impedance Measurement and Power System Stability Analysis for DC Spacecraft Buses

WED-PM-2

Manuel Martin Soriano

msoriano@jpl.nasa.gov

© 2018 California Institute of Technology. Government sponsorship acknowledged.

Jet Propulsion Laboratory
California Institute of Technology

Roadmap

- Relevance
- Stability Criteria
- Verification Methodologies
- Impedance Measurement Demonstration
- Nyquist Stability Analysis

© 2018 California Institute of Technology. Government sponsorship acknowledged.

Relevance

- Spacecraft bus distributes power across N-many loads/subsystems
- Stability between loads and source(s) is crucial, especially at constant power
- Key Example: International Space Station

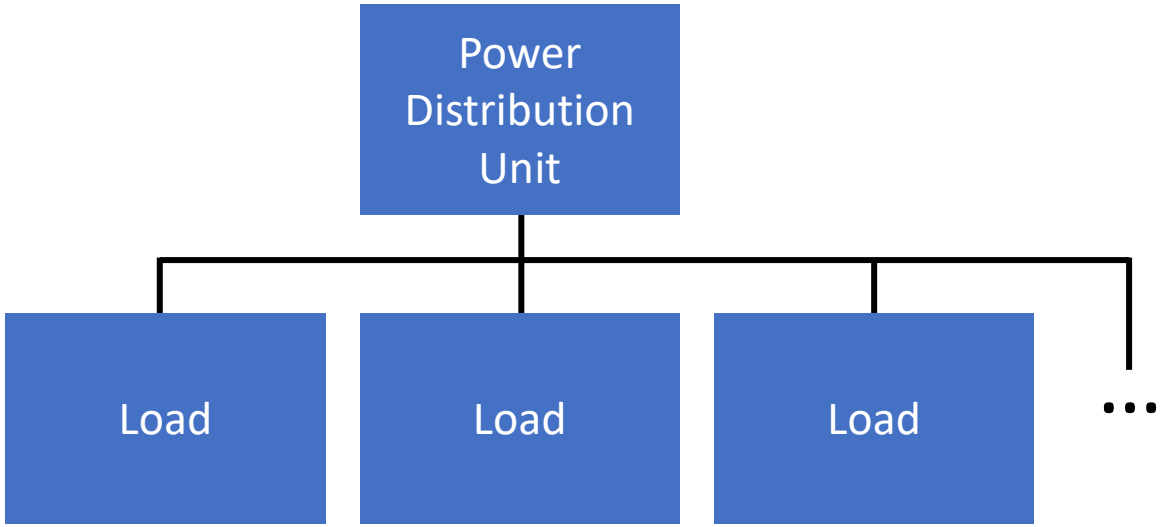

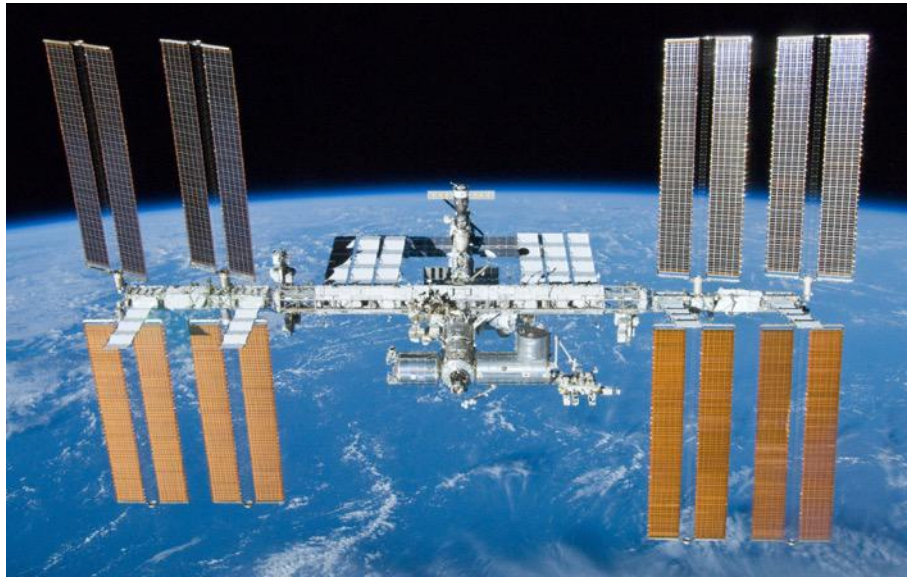

© 2018 California Institute of Technology. Government sponsorship acknowledged.

Stability Criteria

$$Z = R + jX \qquad Z_R = R \qquad Z_C = \frac{1}{j\omega C} \qquad Z_L = j\omega L$$

- Middlebrook Criterion
  Load impedance is greater than source impedance at all frequencies.

$$|Z_{Source}| \ll |Z_{Load}| \text{ or } |\mathrm{T}_{MLG}| = \left|\frac{Z_S}{Z_L}\right| \ll 1$$

- Gain and Phase Margin Criterion
  There is arbitrarily sufficient gain and phase margin between the source and load, where

$$GS = 20\log(Z_L) - 20\log(Z_S) \quad \text{and} \quad PS = \phi_L - \phi_S$$

© 2018 California Institute of Technology. Government sponsorship acknowledged.

Verification Methods

- Circuit Modeling/Simulation
- Impedance Measurement
- Additional Analyses

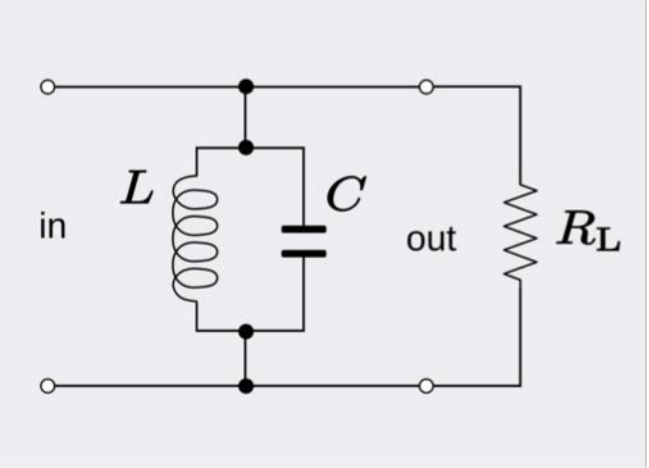

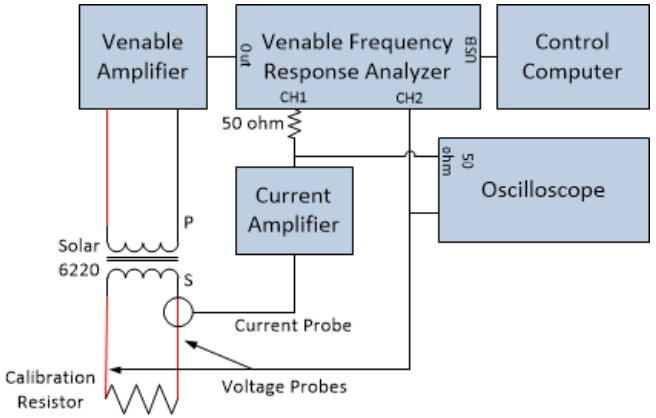

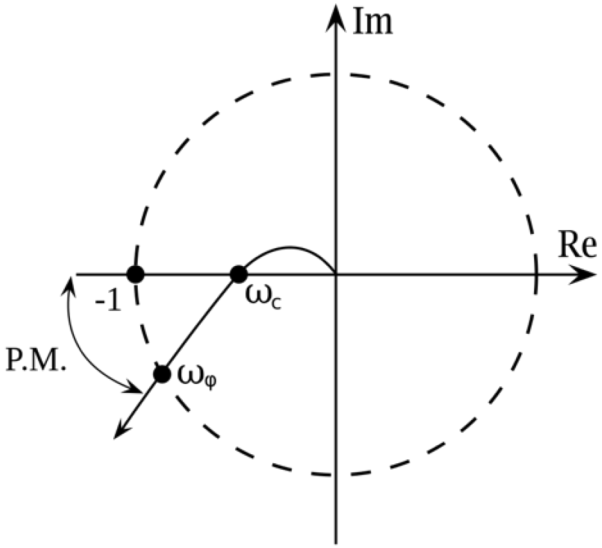

© 2018 California Institute of Technology. Government sponsorship acknowledged.

Impedance Measurement Demonstration

© 2018 California Institute of Technology. Government sponsorship acknowledged.

Impedance Measurement Setup

- Calibrate test equipment setup before proceeding
- Various selection of measurement hardware available

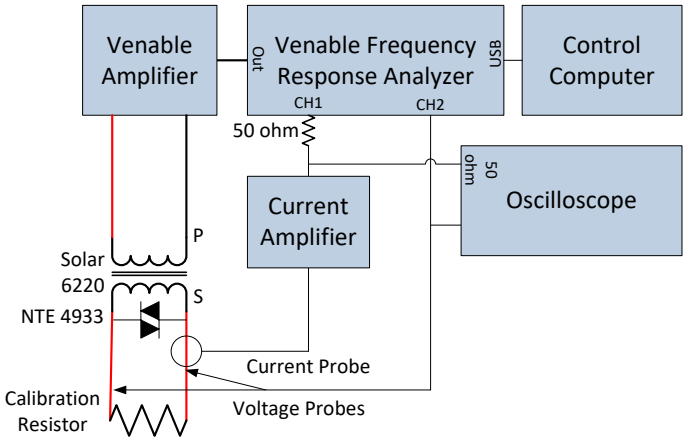

Calibration Setup

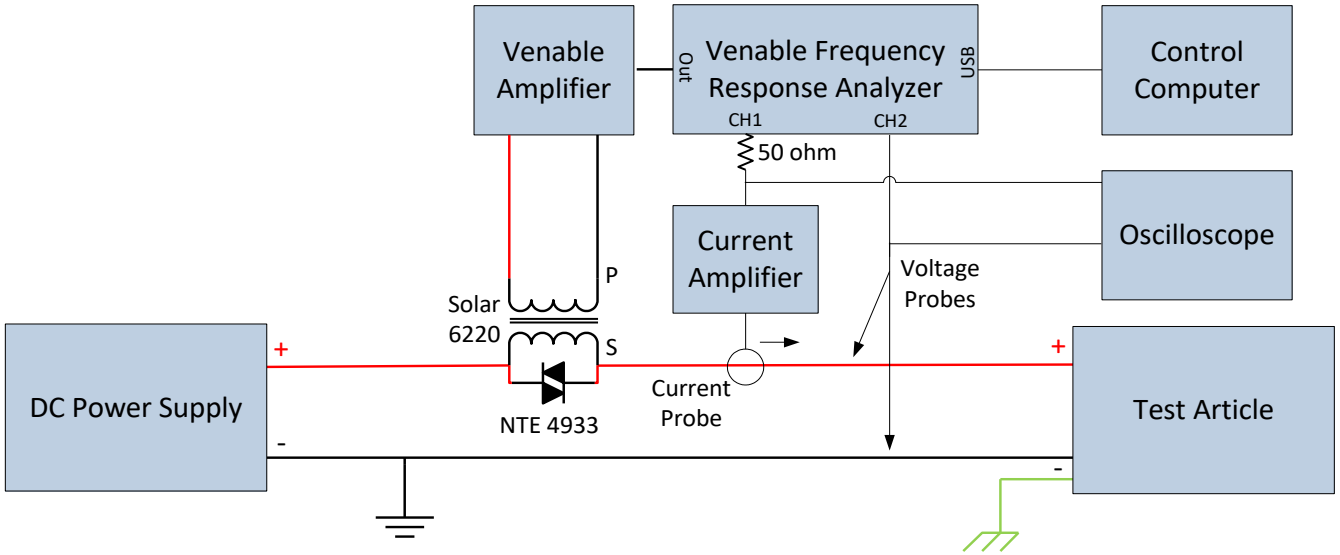

Test Setup

© 2018 California Institute of Technology. Government sponsorship acknowledged.

Example Data

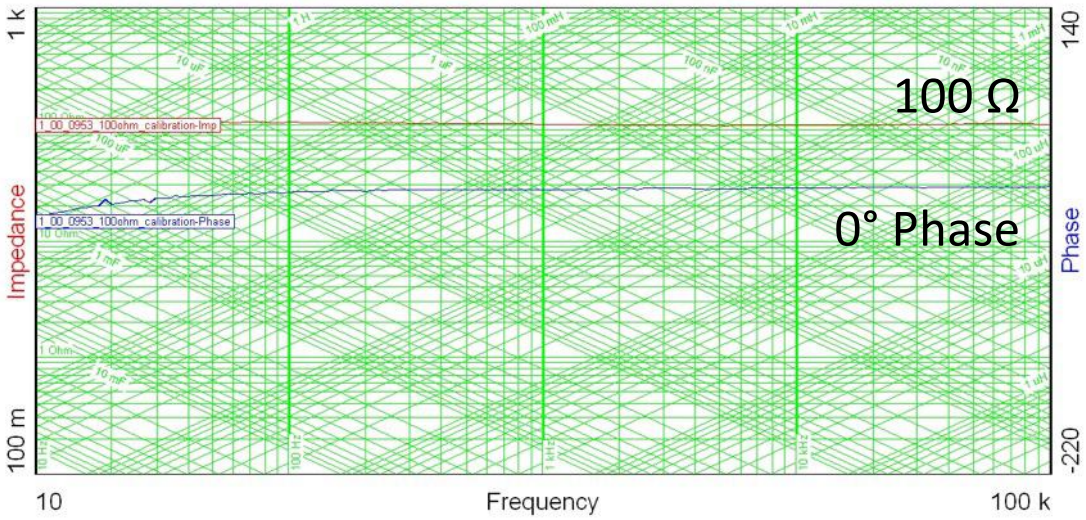

Calibration Run with
100 Ω NI Resistor

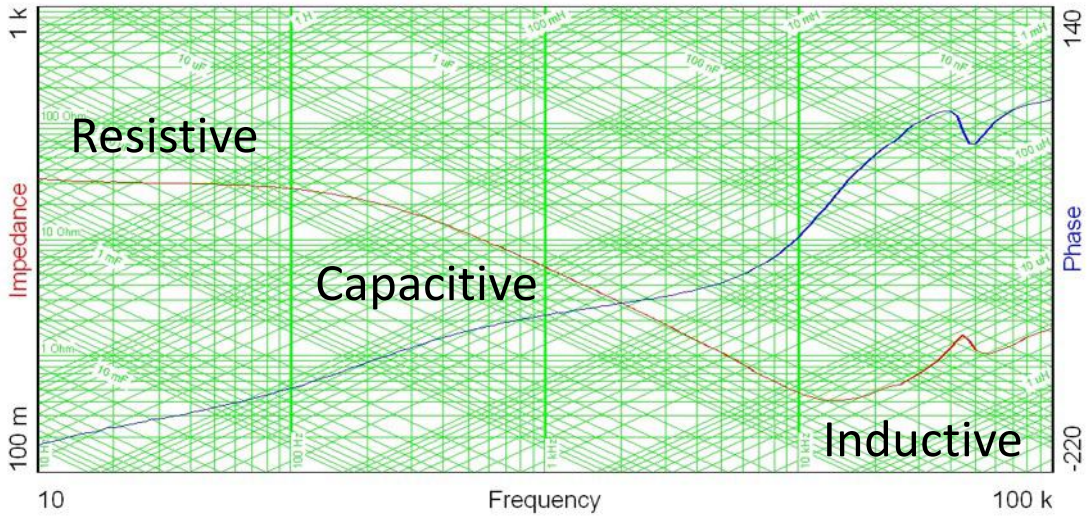

OCO-3 PCE at Full Load

© 2018 California Institute of Technology. Government sponsorship acknowledged.

Assessing the Data

- Do we meet Middlebrook Stability Criterion?
- Is the system stable?

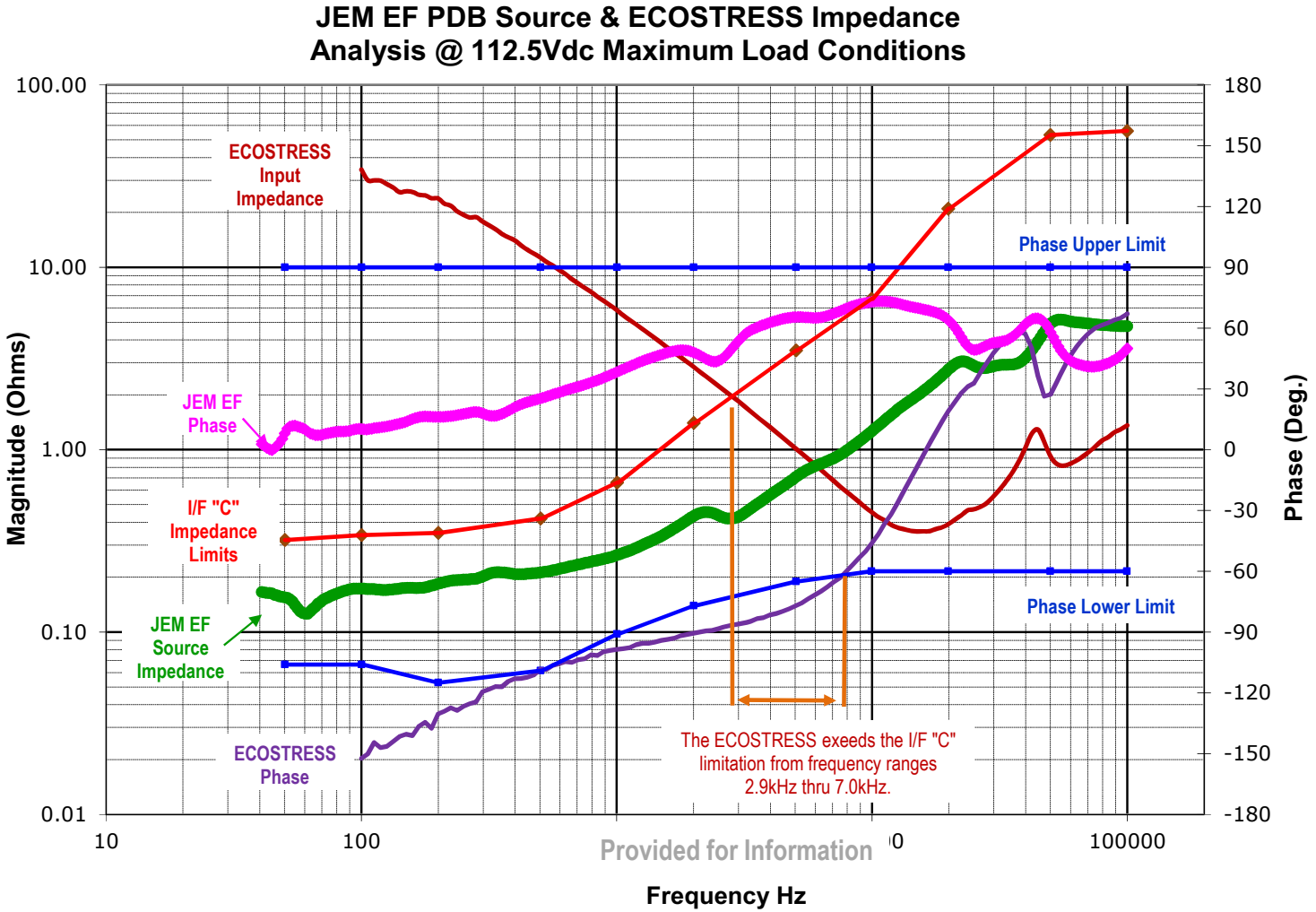

Courtesy of Henry Hoang, Boeing/NASA JSC

© 2018 California Institute of Technology. Government sponsorship acknowledged.

Nyquist Stability Analysis

- Traces transfer function between source and load in a Nyquist plot
- Gain Separation

$$Tm = \frac{ZS}{ZL}$$

Phase Separation

$$PS = \phi_S - \phi_L$$

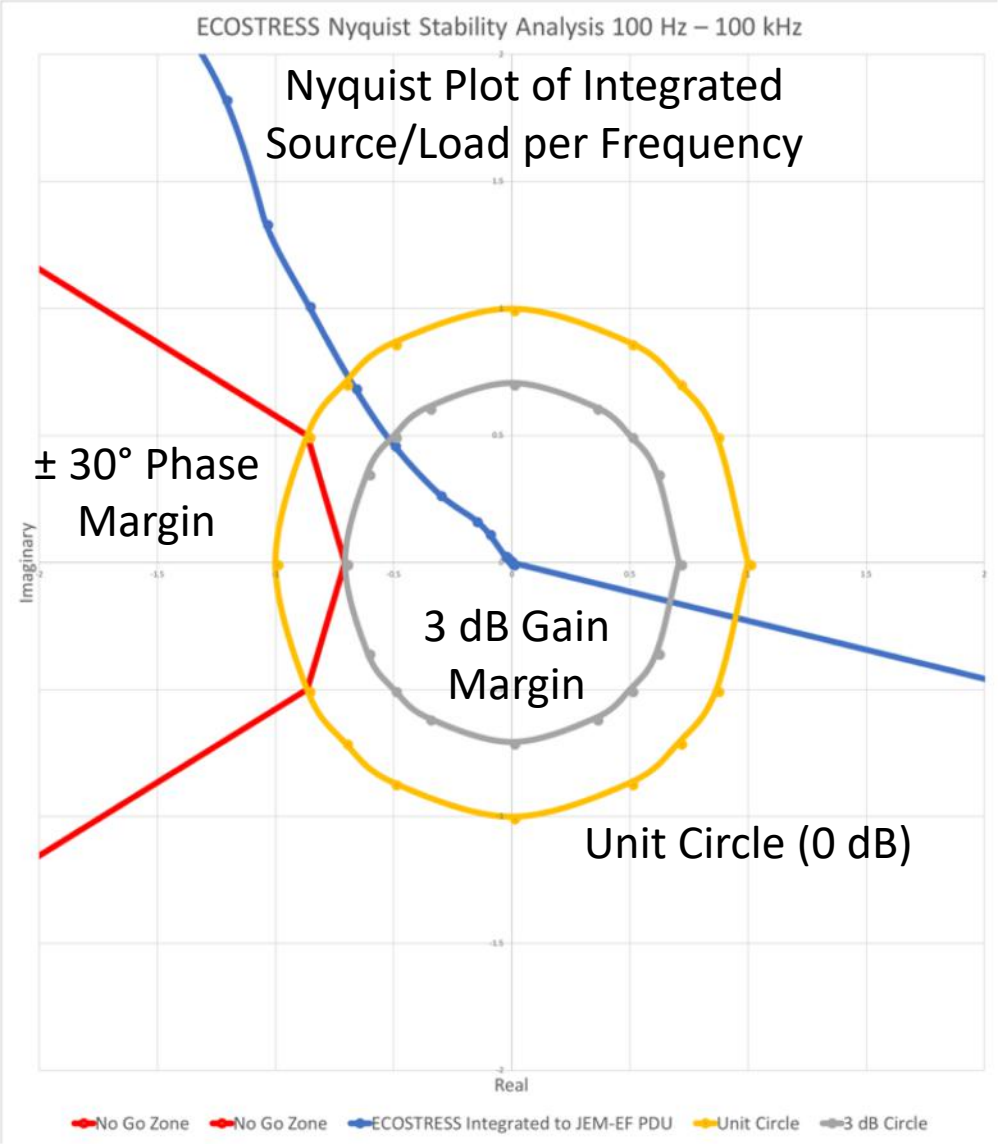

© 2018 California Institute of Technology. Government sponsorship acknowledged.

Lessons Learned

- Test early in project lifecycle, especially development units with resistive loads
- System-level hardware may have unintended impedance sources
- Give test article time to stabilize at respective load condition

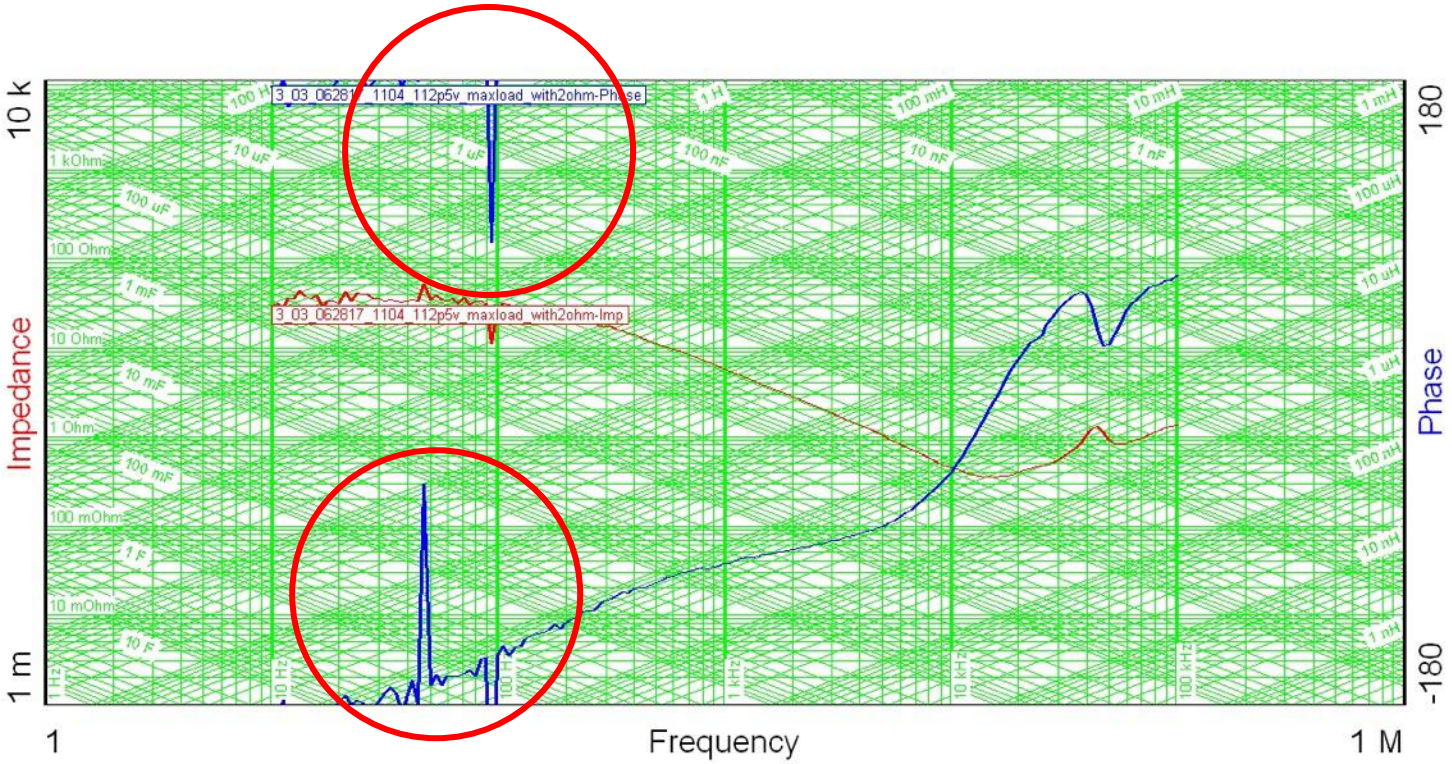

Cryocooler Drive Frequency
with Second Harmonic

© 2018 California Institute of Technology. Government sponsorship acknowledged.

Conclusion

- Verification of power system stability is vital in the integration and operation of increasingly complex DC spacecraft buses
- Multiple methods are available to verify stability
- Power Stability Criteria is recommended for hardware requirements/specification definition

© 2018 California Institute of Technology. Government sponsorship acknowledged.

References

[1] H. Hoang, Training Course, Topic: "Training of Venable Test Equipment at JPL: ECOSTRESS Payload." ISS Power Laboratory, Boeing EPS, May 25, 2017.

[2] A. Riccobono and E. Santi, "Comprehensive Review of Stability Criteria for DC Power Distribution Systems," *IEEE Trans. on Industry Applications,* vol. 50, no. 5, pp. 3525-35, Sept/Oct. 2014.

[3] C. Paul, *Introduction to Electromagnetic Compatibility,* 2nd ed. Hoboken, New Jersey: Wiley, 2006.

© 2018 California Institute of Technology. Government sponsorship acknowledged.