Progress Report on the Spacecraft Atmosphere Monitor's Development Model

S. M. Madzunkov[1], R. D. Kidd[1], B. Bae[2], J. Simcic[2], S. Schowalter[2], J. Gill[3], R. Schaefer[4], E. Diaz[5], M. L. Homer[6], D. Nikolić[2] and M. Darrach[7]
California Institute of Technology, Jet Propulsion Laboratory, 4800 Oak Grove Drive, Pasadena, CA, 91109

The Spacecraft Atmosphere Monitor (S.A.M.) is a miniature gas chromatograph (GC) mass spectrometer (MS) intended for assessing trace volatile organic compounds and the major constituents in the atmosphere of present (the International Space Station) and future crewed spacecraft. As such, S.A.M. will continuously sample concentrations of major air constituents (CH_4, H_2O, N_2, O_2, and CO_2) and report results in two-second intervals. The S.A.M. is a technology demonstration planned to launch in 2018 and we report here on recent developments taking place in building a testbed and development model of the instrument. The S.A.M. is mechanically designed to operate under hi-G loads present during launch events and can operate at sub-atmospheric pressures relevant to extra-vehicular activities. Total instrument mass is projected at 9.5 kg with power consumption estimated at 35 W. The S.A.M. instrument will provide on-demand reporting on trace volatile organic compounds (VOC) at ppm to ppb levels of 40+ species relevant for astronaut health.

Nomenclature

ASIC	=	Application Specific Integrated Circuit
COTS	=	Commercial Off-the-Shelf
DM	=	Development Model
EB	=	Electronics Boards
FID	=	Flame Ionization Detector
FPGA	=	Field-Programmable Gate Array
GC	=	Gas Chromatograph
GR	=	Gas Reservoir
HV	=	High Voltage
ISS	=	International Space Station
JPL	=	Jet Propulsion Laboratory
LV	=	Low-Voltage
MC	=	Microcolumn
MCA	=	Major Constituents Analysis
MEMS	=	Micro-Electro-Mechanical System
MS	=	Mass Spectrometer
MV	=	Microvalve
PC	=	Preconcentrator
PCB	=	Power Control Board
PCGC	=	Preconcentrator/Gas Chromatograph
POR	=	Power on Reset
ppb	=	Parts-per-Billion
ppm	=	Parts-per-Million
PRT	=	Platinum Resistance Thermometer
NAS	=	Network Attached Storage
NEG	=	Non-Evaporable Getter
QIT	=	Quadruple Ion Trap
rf	=	Radio Frequency
S.A.M.	=	Spacecraft Atmosphere Monitor
sccm	=	standard cubic centimeter per min
SEU	=	Single Event Upset
SMAC	=	Spacecraft Max. Allowable Conc.
SI	=	Sampling Interface
SPI	=	Serial Peripheral Interface
TB	=	Testbed
TIC	=	Total Ion Current
TG	=	Trace Gas
UART	=	Universal Asynchronous Receiver / Transmitter
UHV	=	Ultra High Vacuum
VCAM	=	Vehicle Cabin Atmosphere Monitor
VHCE	=	Valve Heater Control Electronics
VOC	=	Volatile Organic Compound

[1] Senior Technologist, Group 382D, M/S 306-392.
[2] Technologist, Group 382D, M/S 306-392.
[3] Microdevice Engineer, Group 389A, M/S 306-392.
[4] Electronics Engineer, Group 382D, M/S 306-392.
[5] Systems Engineer, Group 382B, M/S 171-B56.
[6] Technologist, Group 3463, M/S 303-300.
[7] Senior Technologist, Group 382D, M/S 306-431.

© 2017 California Institute of Technology. Government sponsorship acknowledged.

I. Introduction

THE S.A.M. instrument is JPL's atmospheric monitoring module [1,2] for the international Space Station (ISS) that is based on a GCMS system consisting of a QITMS interfaced with microfabricated preconcentrator (PC) and GC unit (the PCGC subassembly) and small gas carrier reservoir (GR), see Figure 1A. Miniature PCGC offers further reduction in the overall instrument size to the 24 x 22 x 19 cm envelope and 10 liter volume. This reduction in size is achieved using compact and foldable electronics boards (EB) and sampling interface (SI) inlet ports isolated with Mindrum Inc. solenoid valves. The instrument also uses a NexTorr D 100-5 ion/getter system that has a pumping speed comparable to a 100 L/s sputter ion pump but requires much less space and weight. The *rf* module consists of a high-power amplifier, a high-Q, high-voltage air-core resonant tank, and a folding auxiliary electronics design. The QITMS requires a smaller UHV chamber, features a "wireless" design, and deploys a novel electron gun geometry and ion detector design. These modifications to the QITMS provide S.A.M. with a capability to operate under higher G loads typical for launch or re-entry. Trace gas (TG) analysis is based on a unique MEMS-PCGC module built at JPL and allows for reduced power and smaller carrier gas consumption as compared to its predecessor, the Vehicle Cabin Atmosphere Monitor (VCAM) [4-7]. In the major constituents analysis (MCA) mode the QITMS sensor is required to have a mass range of 10-50 Da to be able to detect compounds from CH_4 to CO_2, whereas in the trace gas (TG) analysis mode this mass range is extended to 30-300 Da for identification of volatile organic compounds. Operating pressures range from a base vacuum (no gas flow and electron filament off) of 5E-10 Torr to less than 5E-9 Torr inside the QIT (with continuous MCA gas intake and filament on), or up to 3E-6 Torr when in TG mode with H_2 carrier gas. Based on these operating pressures the continuous pumping requirements can be illustrated on the following example.

To be able to report MCA values every 2 seconds and to perform TG analysis once a week for a period of two years, the QITMS sensor should have a pump with N_2 and H_2 capacity greater than 0.5 Torr L and 35 Torr L, respectively. In addition, pumping speeds must exceed 3 L/s for ambient N_2 gas and 100 L/s for H_2 carrier gas. For example, if N_2 pressures inside and outside of the QIT are maintained at 5E-9 Torr and 5E-10 Torr, respectively, then the sample gas will leak out of the QIT into the vacuum chamber with an effective conductance of 0.06 L/s and ion/getter pump will have to adsorb about 3E-10 Torr L/s of N_2. This in turn translates to bi-annual N_2 consumption of about 0.02 Torr L, which is well below the total capacity of 0.25 Torr L for N_2 (about 10% of pump capacity, leaving 90% for H_2) when QITMS is operated in the MCA mode. However, when operating in TG mode at 760 Torr, the flow of H_2 carrier gas is 0.07 sccm and ion/getter pump needs to adsorb at most 1E-3 Torr L/s of H_2; if operated once a week for 20 min, the bi-annual sorption of H_2 is at most 125 Torr L. Since the NexTorr D 100-5

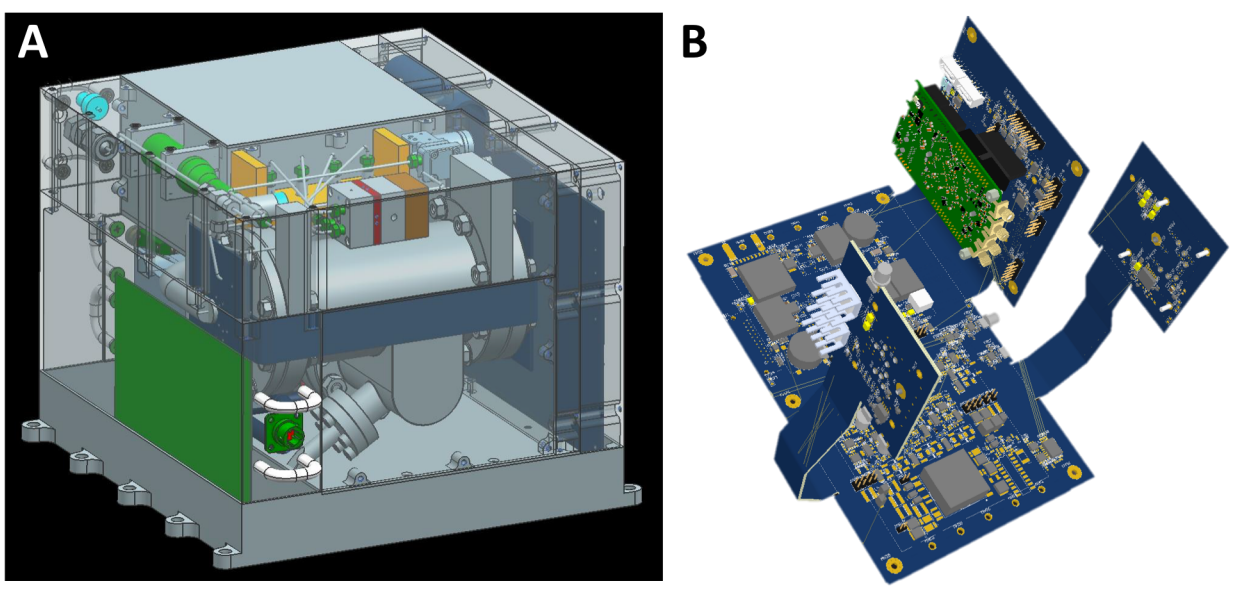

Figure 1. Conceptual design of S. A. M. instrument. *(A) CAD model of the Spacecraft Atmosphere Monitor and (B) its flex-electronics shown separately.*

ion/getter pump has the total capacity of 135 Torr L for H_2, this represents ~93% of pump's capacity and its bi-annual operation without regeneration is almost feasible. Another example would be an annual, 10 minutes per day, TG mode of operation supported by two ion/getter pumps. The same sensor should also be equipped with an integral heater capable of heating the ion trap to at least 90 °C to be able to get rid of adsorbed water and to prevent the sticking of VOCs to the MS surface. In order to meet the sufficient count statistics required for accurate MCA operation on 2 s basis, the QITMS sensor must have a sensitivity above 1E12 counts/Torr/s.

In this report we provide an overview of the development and assembly of the Testbed (TB) flat-sat model and preliminary MCA measurements as well as the progress in development and assembly of the Development Model (DM). The software necessary to run the instrument autonomously is constantly developed and already exists as a combination of C^{++} code and Linux command line utilities. All the time critical events/operations are performed with Field-Programmable Gate Array (FPGA) voltage regulations, including timing, *rf* control, and data acquisition; at currently, the software is optimized for the ARM v7 processor and communicates with the FPGA via predefined set of registers, and will retrieve measured data on per measurement frame basis. At present, our main development platform for computing and *rf* synthesis is the Red Pitaya, which is a commercial grade open-source software measurement and control board that will be modified in the near future to include industrial grade and rad-hard electronics components.

II. Instrument Overview

The functional block diagram of the instrument is given in Figure 2 where all unlabeled valves are assumed to be microfabricated MEMS microvalves (MV). The MEMS-GC module has a single, three-layer block subassembly which contains three MEMS devices: (i) the preconcentrator (PC) fused onto (ii) the MEMS microvalve (MV) array, and, (iii) the 4 m MEMS gas chromatograph (GC) microcolumn. The isolation and selective routing of the calibrant, carrier gas, and cabin atmosphere through the S.A.M. is provided by three low-leakage solenoid valves from Mindrum, Inc. The sensor module consists of the QITMS in a high vacuum chamber, pumped by a combination ion/getter pump. Details of the development, fabrication, and performance of the individual MEMS devices have been reported elsewhere [2,8].

In the MCA mode of operation, following the sample input, an analyte is circulated through valve V3 into the vacuum chamber using the pressure difference sustained by the pumping of the sensor subassembly (base pressure < 1E-9 Torr). In this way the MCA mode is unaffected by any malfunctioning of the GC system which is designed to independently monitor the trace gas VOCs. This preserves the instrument's baseline integrity in the event of a partial system failure.

In the trace gas mode of operation, gas flow is maintained by a sample pump (Model: D250BL from TCS micropump, UK) and directed through the preconcentrator using microvalves S and V. At the end of the sampling cycle, microvalves S and V are closed, the PC is flash-heated, then microvalve I is opened for injection. The MEMS valves serve to route the carrier gas to push the desorbed VOCs to GC block; this ensures that the desorbed analytes are only circulated through the GC block and carried into the sensor subassembly (QITMS). As a result, various organic compounds are chronologically separated and introduced into the QITMS, where following their ionization by electron impact, all charged molecular fragments are confined with different residency times and detected proportionally to their mass-to-charge ratio. S.A.M. is intended to continuously operate for a year in absence of any regeneration of vacuum pump cycle, so the entire sample introduction system is designed to minimize the use of gas. In the case of saturation, the ion/getter pump must be connected to a separate vacuum system to extract the adsorbed gases during pump regeneration.

The S.A.M. electronics module (Figure 1B) evolved from the development for the MARINE (Mass Analyzer for Real-time Investigation of Neutrals at Europa) [9] electronics and is being designed to accommodate an aggressive packaging requirement while also meeting demands to demonstrate new capability (touchscreen, WiFi, supplemental rf waveform drive, vacuum preservation fault detection and full instrument autonomy) and consume minimal power in a tight schedule with limited design resources.

The selected compute element is a COTS open source instrument platform (Red Pitaya) which employs the Xilinx Zynq and high speed waveform converters to perform instrument grade waveform synthesis and acquisition out of the box. The open source nature of the software puts a community of developers behind the board, while the programmable logic portion of the Zynq can be programmed with the JPL MS FPGA design, and as the design matures, the processor portion of the Zynq can re-program the FPGA bit file on the fly. By outmatching expensive rad-hard ASIC devices, the Virtex®-5QV FPGA is one of the possible off-the-shelf candidates for the high performance rad-hard reconfigurable FPGA. The non-volatile storage is baselined to be on the resident microSD card with a potential back up of serial peripheral interface (SPI) flash and ISS network attached storage (NAS). With

the popularity of the Zynq, several flight boards are in development and will provide a path-to-flight after this technology demonstration i.e., a custom JPL cubesat Zynq board is in the design phase and various vendors have Zynq boards on their linecards.

Given the instrument size constraints, and carrying hundreds of interconnects for power delivery, signal drive, acquisition and monitoring, the cabling would quickly become onerous and fill the volume of the enclosure. Thus a rigid-flex approach was adopted and allows the electrical design to deliver the majority of its signals over flex and particularly provide the critical sensor electrode signals to its pins on either side of the vacuum chamber. In select areas, such as rf signal delivery and power amplifier supply delivery, shielded cables and connectors will still be used. The high voltage portions require care and the interconnects will be potted both in the supply board and at the HV pin delivery into the chamber.

It is expected that the processor may undergo anomalous resets in orbit as in its predecessor instrument. Additionally, due to the portable nature of S.A.M., it is likely that the instrument will undergo a power loss event due to inadvertent cable detachment. In either situation, S.A.M. has its valve heater control electronics VHCE board carrying a rad-tolerant ProAsic FPGA. This FPGA does fault detection and safes the instrument in any anomalous scenario. Instrument safing has to have enough energy storage to fire four critical valves to preserve UHV and gracefully shutdown any operating supply. In the case of a Single Event Upset (SEU) in the Zynq processor, the VHCE is responsible for safing the instrument and then applying cycled power and a power on reset (POR) signal to the Zynq board. The energy storage is being baselined as stacked ceramic capacitors due to their proven use in spaceflight, however an alternate approach being studied is storing the energy in low voltage ultracapacitors at the input to the dc/dc converter for the valve power supply. The VHCE also implements all of the GCMS unique aspects of the instrument – controlling the 300 V MEMS electrostatic valves, driving various heaters and a pressure transducer and acquiring and reporting overall instrument telemetry over a standard UART.

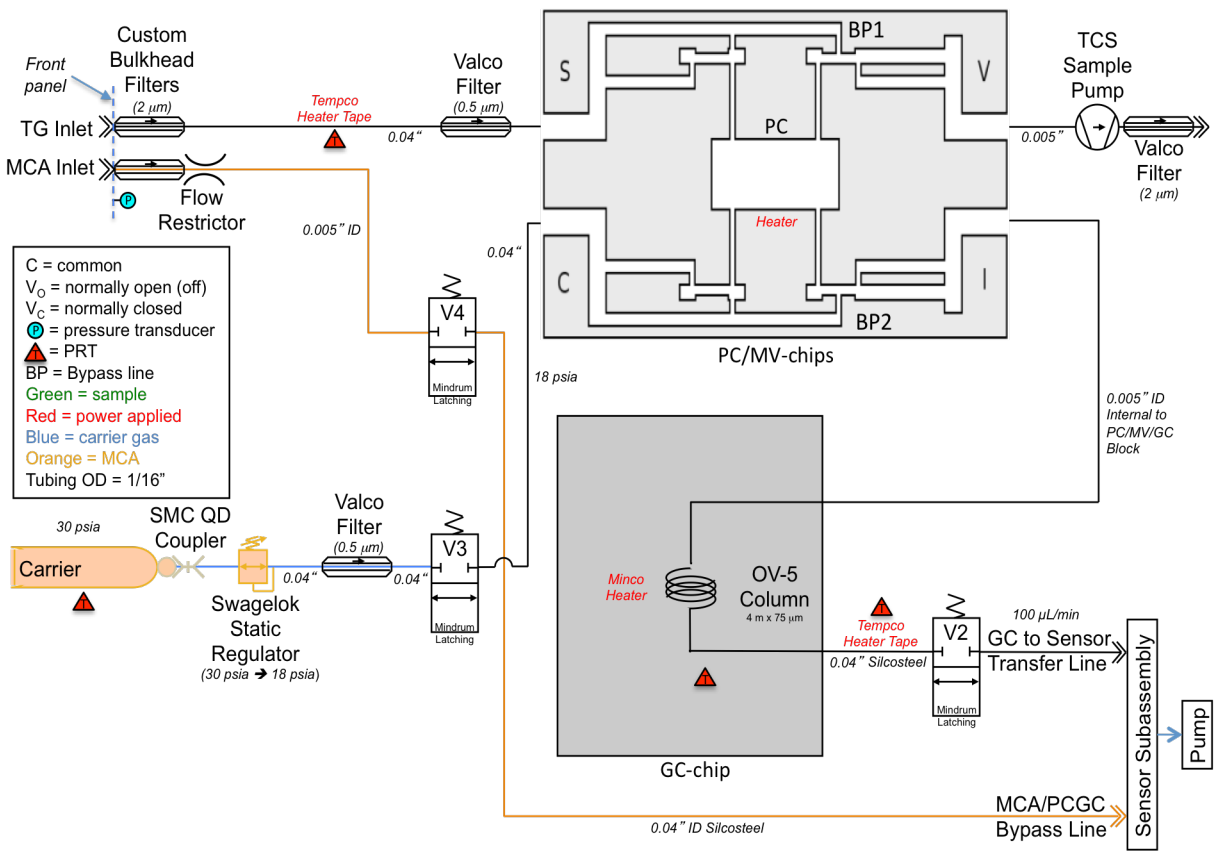

Figure 2. Functional Block Diagram of the S.A.M. *This diagram shows the plumbing for both the Trace Gas (TG) and Major Constituents Analysis (MCA) lines. The three PCGC chips are actually housed in a single three-layer Vespel block.*

III. Development, Assembly and Testing of the Testbed

The Testbed was assembled in late 2016 as a flat-sat configuration (Figure 3). It consists of bread-board electronics for controlling the PCGC, breadboard electronics for operating the mass spectrometer and brassboard versions of both the PCGC and QITMS subassemblies. The TB can operate with either helium or hydrogen as the carrier gas and either a turbo molecular pump/roughing pump configuration (for He) or the COTS ion/getter pump (for H_2). The turbo molecular pump/roughing pump setup is also used to condition/regenerate the getters.

The TB PCGC MEMS-GC module has two Vespel block subassemblies: (i) the GC block, containing the total 4 m length of a MEMS gas chromatograph column and (ii) the PC/MV block, containing the preconcentrator (PC) and MEMS MV.

The PC consists of (a) the Si doped heater, (b) a Carboxen layer and its chamber where Carboxen particles are filled in, (c) the inlet-outlet layer that connects the PC chamber to inlet and outlet via channels, and (d) an image of Carboxen particles. The heater can be flash heated to 250°C in 0.5 sec (without Carboxen) due to the thermally isolated design and material of the heater, which are implemented by through-etching around the heating plate and silicon-on-insulator, respectively. The PC gains for the first highest peak and all the peaks summed up are 4,331 and 12,170, respectively [8]. While a 4,331 PC gain is high enough for analysis of ppb concentration VOC compounds, this implies that the PC has potential of the extreme high gain of 12,170 once the single heat cycle desorbs all of the adsorbed analytes shown in the multiple peaks

The MV consists of five main components of the electrostatically-operated MV: the top cap (TCAP), the valve closing (VC), the membrane (MEM), the valve opening (VO), and the bottom cap (BCAP). Four membrane valves are embedded. TCAP/BCAP and VC/BCAP are bonded as a stack using Au diffusion bonding technology. TCAP/VC and BCAP /VO stack sandwich is bonded to the MEM layer using benzocyclo-butene (BCB) adhesive to complete the MV assembly. The layers consist of a moving membrane that moves up and down in response to an electric field that is applied between the membrane and the upper and lower piece of silicon. These are the first electrostatic MEMS valves to achieve over a million cycles, and achieved 47 million cycles before failure which is equivalent to 5.9 years of operation when the valve is switched every 4 seconds. The MV chip integrates six microvalves with four membrane valves and two bypass valves, which are composed of three valves of Sample (S), Vent (V), and Bypass1 (BP1) that load the VOC samples; and the other three valves of Carrier (C), Injection (I), and Bypass2 (BP2) to route and inject the sweep gas through a 1 µL chamber to the microcolumn that is designed for low dispersion and has a new deactivation method applied (Figure 2).

The GC consists of an overall footprint of the 60 µm (W) x 100 µm (D) x 4 m long serpentine chip with a hydraulic diameter of 86 µm. The serpentine microchannel provides better separation in the micro level of the chip design compared to a spiral column. The MC has a one-hour coating treatment. In general, a longer dynamic coating time increases both the thickness and the uniformity. These are facilitated by smaller pressure gradients due to the reduced flow rate of the coating solution. The uniform coating improves the peak shape such that peak tailing is less

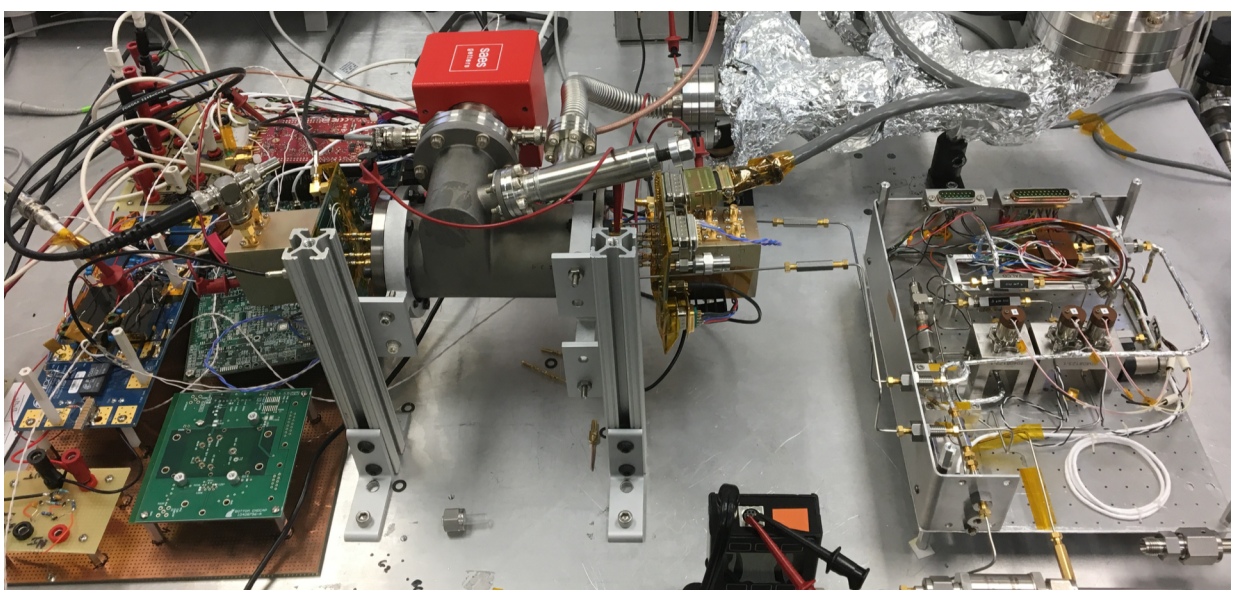

Figure 3. Photograph of the Testbed (TB) flat-sat setup. *Breadboard electronics are on the left, the QITMS subassembly is in the middle and the PCGC subassembly is to the right.*

pronounced. In general, assuming uniform coating thickness, longer columns of the OV-5 coating will improve the peak separation. For polar compounds, stacking another column with a different polarity coating may also improve the peak separation and will help investigate how the baseline pulse form into the GC column changes during successive flash elutions.

The TB system continues to undergo tuning, primarily in the mass spectrometer *rf* control and the PCGC TG sequencing. Although preliminary TG measurements (using H_2 as carrier gas) have been performed using BTEX, the TB has primarily been used for demonstrating MCA measurements (Figure 4).

IV. Development, Assembly and Testing of the Development Model

Starting in the beginning of 2017, work commenced on the final design, fabrication (or procurement), and assembly of the S.A.M. development model (DM). Figure 5 shows the main DM subassemblies and progress of the integration. Figure 5A shows the most of the aluminum chassis. Figure 5B shows the PCGC subassembly with its metal hydride hydrogen tank beside it. Currently, gas GSE (ground support equipment) is installed to allow attachment of external gas supplies. Figure 5C shows the S.A.M. electronics boards prior to integration into the DM: (a) the prototype mezzanine board for the Valve Heater Control

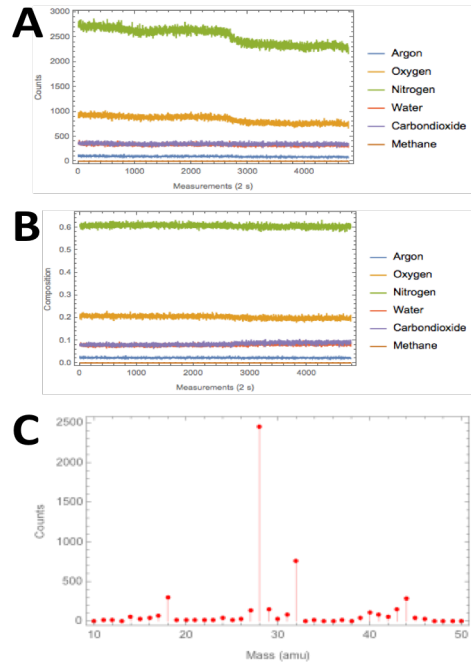

Figure 4. Major Constituents Analysis (MCA) performed on the TB. *(A) Counts vs. time; (B) frac vs. time; (C) centroid.*

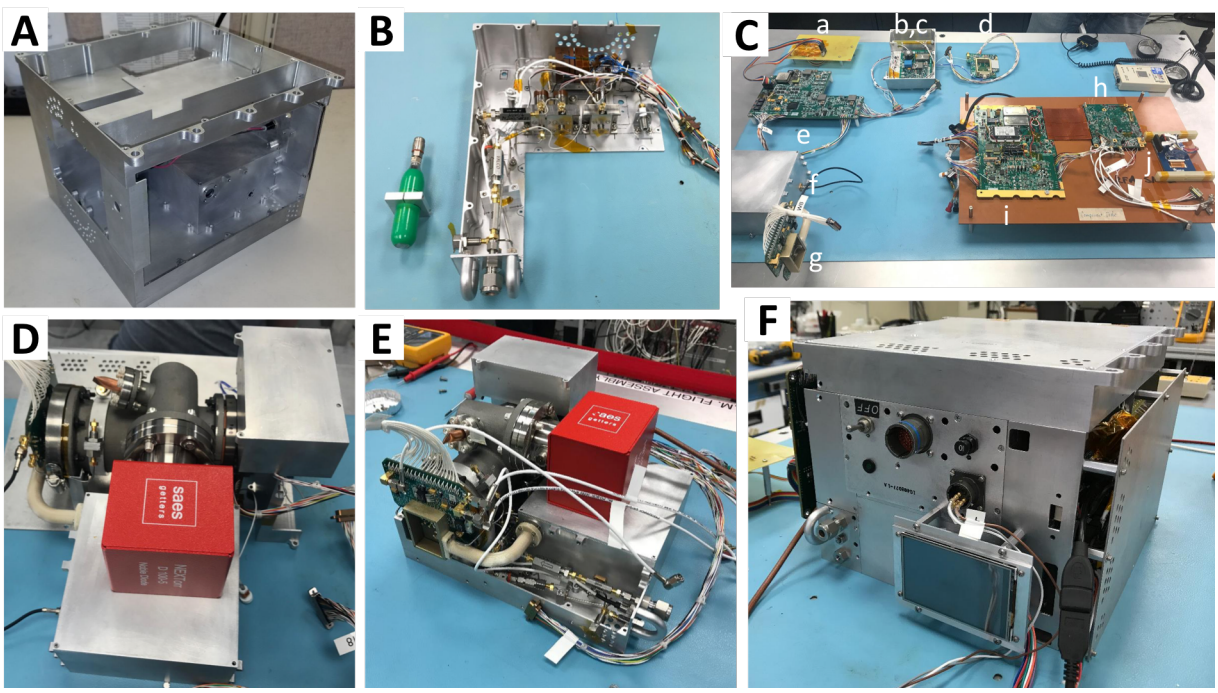

Figure 5. Photographs the Development Model (DM) Assembly. *(A) The aluminum chassis. (B) The PCGC subassembly with its metal hydride hydrogen tank beside it. Initially, the PCGC will be tested with an external pressurized hydrogen tank; the PCGC is shown with the gas GSE installed. (C) The S.A.M. electronics boards (acronyms explained in the text): (a) VHCE-Mezz prototype, (b) AHVPS, (c) LVPS, (d) ECB-Bottom, (e) VHCE, (f) SRL, (g) ECB-Top, (h) back of Red Pitaya, (i) MSRFA, (j) back of the Display. (D) The QITMS subassembly with its electronics. (E) The QITMS subassembly mounted on top of the PCGC subassembly. (F) The complete Development Model (DM).*

Electronics' stacked ceramic capacitors (VHCE-Mezz); (b) Adjustable High Voltage Power Supply (AHVPS); (c) Low Voltage Power Supply (LVPS); (d) Bottom End-Cap Board (ECB-Bottom); (e) Valve Heater Control Electronics (VHCE); (f) Series Resonant Inductor (SRL); (g) Top End-Cap Board (ECB-Top); (h) back of the Red Pitaya; (i) Mass Spectrometer Rigid Flex Assembly (MSRFA), (j) back of the Display. Figure 5D shows the QITMS subassembly with its electronics. Figure 5E shows the QITMS subassembly mounted on top of the PCGC subassembly. The QITMS subassembly consists of the "wireless" QITMS, detector, and electron gun housed inside a 3-D printed sintered metal titanium vacuum chamber. The COTS ion/getter pump (JB Anderson/SAES) is mounted onto this chamber. The MEMS-GC module has the flight-like single, three-layer block subassembly - this contains three MEMS devices: (i) the preconcentrator (PC) fused onto (ii) the MEMS microvalve (MV) array, and, (iii) the 4 m MEMS gas chromatograph (GC) microcolumn. The DM PCGC also consists of the diaphragm sampling pump, three Mindrum valves in two Titanium manifolds, a Minco flex heater (in the GC end of the MEMS-block), Tempco heater tape, Honeywell PRTs, filters, and 1/16" OD VICI-Valco stainless steel tubing.

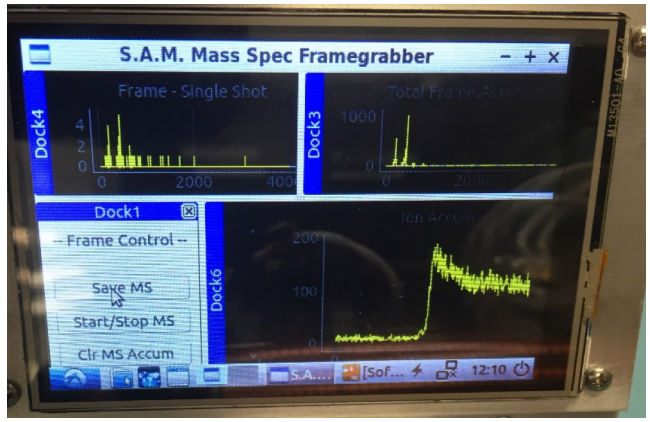

Figure 6. Mass Spectra Shown on the DM Display. *Initial mass spectra (of residual air in chamber) with the DM operated remotely (via WiFi).*

Figure 5F shows the completely assembled Development Model with temporary standoffs for the two sides; Figure 6 is a photograph of initial mass spectra (of residual air in chamber) with the DM operated remotely (via WiFi).

V. Summary

We have presented a progress report on the development of the S.A.M. instrument as a technological demonstration governed by the operational and size requirements for habitat integration on board the ISS. For trace VOCs, we employ MEMS PCGC technology to reduce the overall instrument footprint and power budget. The Testbed has been assembled and preliminary tests are encouraging. This has led the team assemble the Development Model of S.A.M., a functioning model that has the same footprint and projected performance of the flight versions of the Spacecraft Atmosphere Monitor.

Acknowledgments

This work has been carried out at the Jet Propulsion Laboratory, California Institute of Technology, under the contract with the National Aeronautic and Space Administration. Authors would like to thank reviewers for carefully reading the manuscript and for providing comments that helped improve the quality of this article.

References

[1]Madzunkov, S.M., et al., "Report on Development Status of the Micro Total Atmosphere Monitor for ISS and Orion", *Proceedings 45th International Conference on Environmental Systems*, Bellevue, Washington (2015).

[2]Madzunkov, S.M., et al., "Progress report on the Spacecraft Atmosphere Monitor", *Proceedings 46th International Conference on Environmental Systems*, Vienna, Austria (2016).

[3]Chutjian, A., et al., "Overview of the vehicle cabin atmosphere monitor, a miniature gas chromatograph/mass spectrometer for trace contamination monitoring on the ISS and CEV", *Proceedings 37th International Conference on Environmental Systems*, Chicago, Illinois (2007).

[4]Chutjian, A., et al., "Results from the Vehicle Cabin Atmosphere Monitor: a miniature gas chromatograph/mass spectrometer for trace contamination monitoring on the ISS and Orion", *Proceedings 38th International Conference on Environmental Systems*, San Francisco, California (2008).

[5]Darrach, M.R., et al., "Validation test results from the Vehicle Cabin Atmosphere Monitor", *Proceedings 40th International Conference on Environmental Systems*, Barcelona, Spain (2010).

[6]Darrach, M.R., et al., "On-orbit measurements of the ISS atmosphere by the Vehicle Cabin Atmosphere Monitor", *Proceedings 41st International Conference on Environmental Systems*, Portland, Oregon (2011).

[7]Darrach, M.R., et al., "Trace chemical and major constituents measurements of the International Space Station atmosphere by the Vehicle Cabin Atmosphere Monitor", *Proceedings 42nd International Conference on Environmental Systems*, San Diego, California (2012).

[8]Bae, B., et al., "Development of a MEMS preconcentrator (PC) - gas chromatograph (GC) for the Spacecraft Atmosphere Monitor for ISS and Orion", *Hilton Head Workshop 2016: A Solid-State Sensors, Actuators and Microsystems Proceedings*, Hilton Head, South Carolina (2016).

[9]Darrach, M.R., et al., "The Mass Analyzer for Real Time Investigation of Neutrals at Europa (MARINE)", *IEEE Aerospace Conference*, #2.0701, March 1-8 Big Sky, MT (2014).