Mars Deep Drilling Concept

JPL Strategic Investment Task FY2018

Brian Wilcox

Jet Propulsion Laboratory, California Institute of Technology

KISS Workshop

15 Feb 2018

© 2018 California Institute of Technology. Government sponsorship acknowledged.

Percussion Drilling

- Each blow of a hammer causes hard teeth (e.g. tungsten carbide) to break the rock face at each tooth.
- A fluid (liquid or gas) flushes out the cuttings.
- The bit is rotated by a small angle and the process repeats.
- The angle is carefully chosen so that all areas of the hole face are broken before the cycle of impact locations repeat.

Why Percussive Deep Drilling?

- Rule-of-Thumb in petroleum drilling industry is that the Weight-on-Bit (WOB) for diamond drag (e.g. not percussive) drill bits needs to be ~4000 pounds of force (lbf) per inch of bit diameter. (Each diamond cutter is at a different radius and cuts its own groove. So the number of cutters is proportional to the diameter, and each cutter needs a set force.)
- The torque is proportional to the WOB times the drill diameter.
- This linear relationship between diameter and torque is to be compared to the cubic relationship between a steel shaft diameter and its allowable torque.
- The net result is that no materials exist which can deliver enough torque in a small hole - at 0.5GPa stress a solid steel shaft meets the rule-of-thumb at a diameter of 1.4 cm.

Small-Hole Percussive Drilling of Basalt in 2003-4

- Fixture built using commercial rotary-percussive core drill to measure static and dynamic reactions during coring operations on basalt

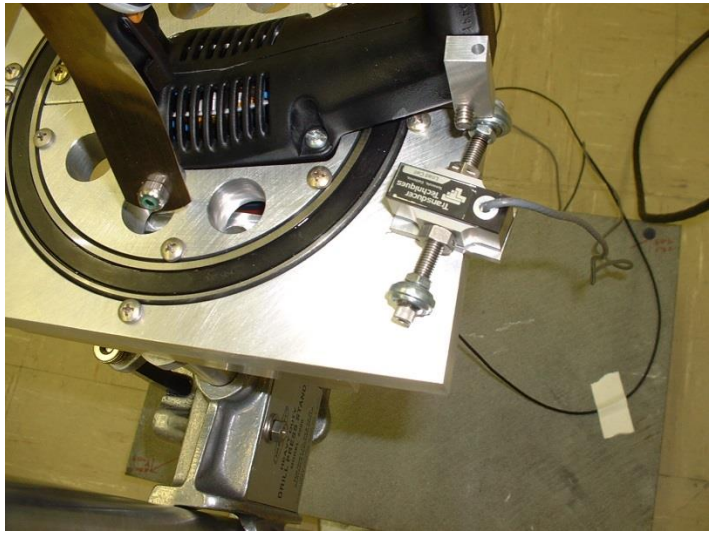

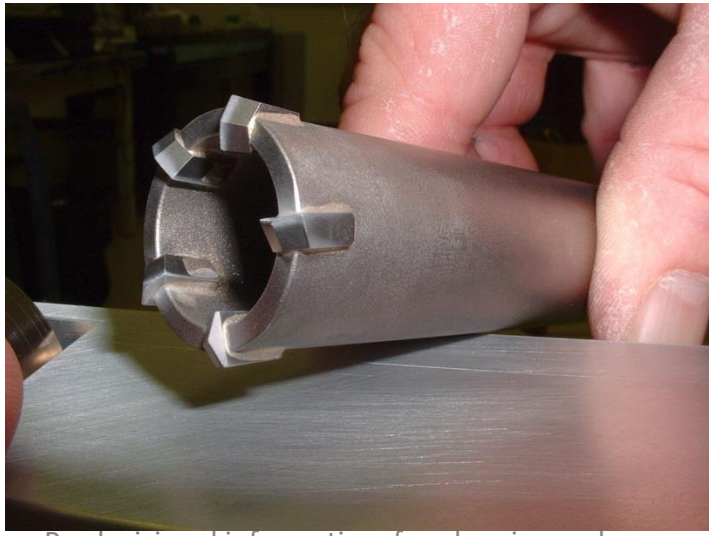

Threshold in Impact Energy to Break Basalt

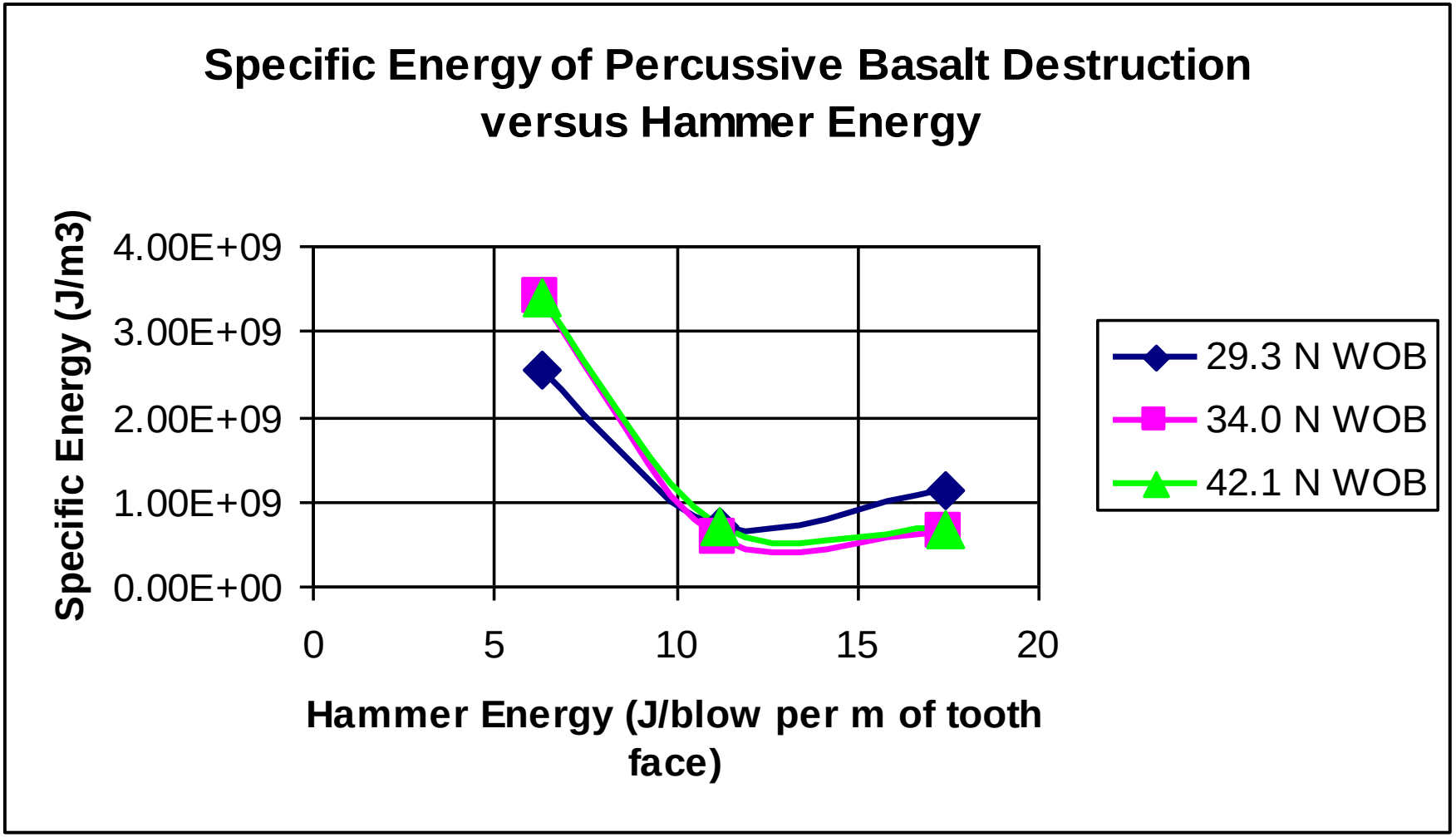

Wireline Systems in Drilling

- Wireline refers to spool of tether between downhole assembly lowered into hole using a winch spool.
- Drilling can be accomplished by having downhole assembly excavate cuttings into a "muck bucket", which is raised to surface when downhole assembly is winched up using wireline.
- Muck bucket is emptied, any maintenance or repair is performed on downhole assembly, and downhole assembly is lowered back into hole to repeat process.
- Wireline can transmit necessary power and/or data to downhole assembly.
- Lining of hole is not accomplished by these systems, so effective only when drilling through competent rock.

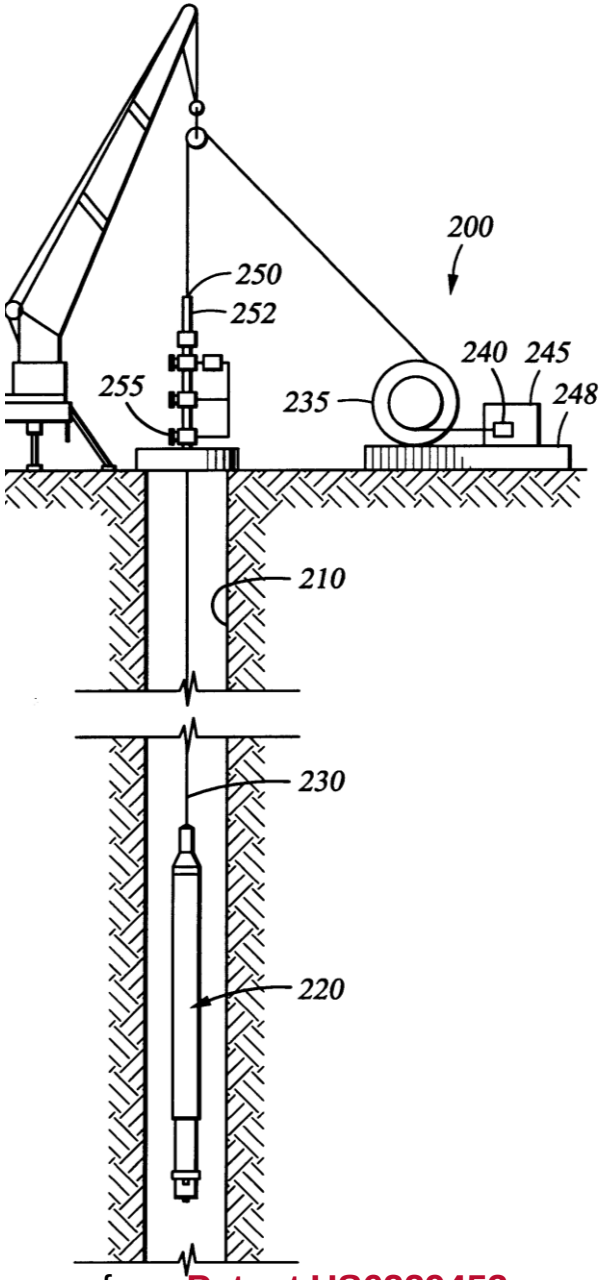

Image from **Patent US6229453**

Mars Deep Subsurface Drilling Concept

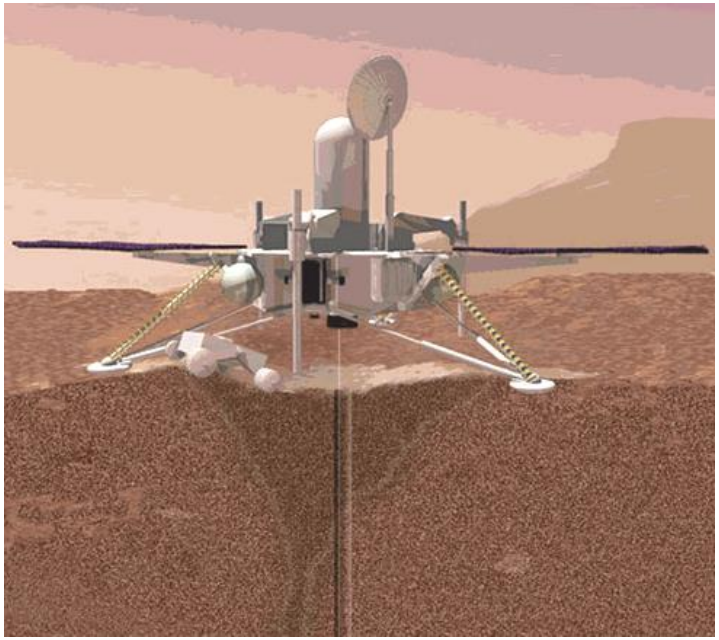

Objectives:

- The objective of this task is to analyze and test methods for penetrating deep (1-10 km) into the Mars Subsurface environment within the mass, power, planetary protection, and cost constraints of realistic near-term robotic Mars missions.

Approach:

- The initial approach is to examine wireline drilling using a CO2-powered rotary-percussive downhole assembly, requiring minimum weight-on-bit, that is tripped out of the hole regularly to dump cuttings.

Mission Concept:

- Land system as payload on MSL-class rover,
- Rove around until a suitable rock outcrop is located.
- Make ~1 km loop around outcrop, dropping fine wire used as Ground-Penetrating Radar antenna.
- Return to outcrop and connect to both ends of wire loop.
- Begin GPR sounding to establish that rock is likely to be competent all the way to the subsurface aquifer. (If not, may seek other site; can have extra spools of wire.)
- Begin drilling.

Advantages:

- Relatively easy to sterilize downhole assembly and related equipment via dry-heat sterilization to several hundred degrees Celsius.
- Weight of downhole assembly provides sufficient weight-on-bit for rotary-percussive drill mechanism.
- Relatively small torque-reaction against sidewall (provided by "toothed rollers" which are spring-loaded against bare rock inside face of hole.
- Mass of system essentially independent of maximum depth, since hole is not lined and spool of wireline is lightweight.

JackHammer

- Basic concept of pneumatic jackhammer patented in 1894.
- Reciprocating valve out of phase with reciprocating hammer.

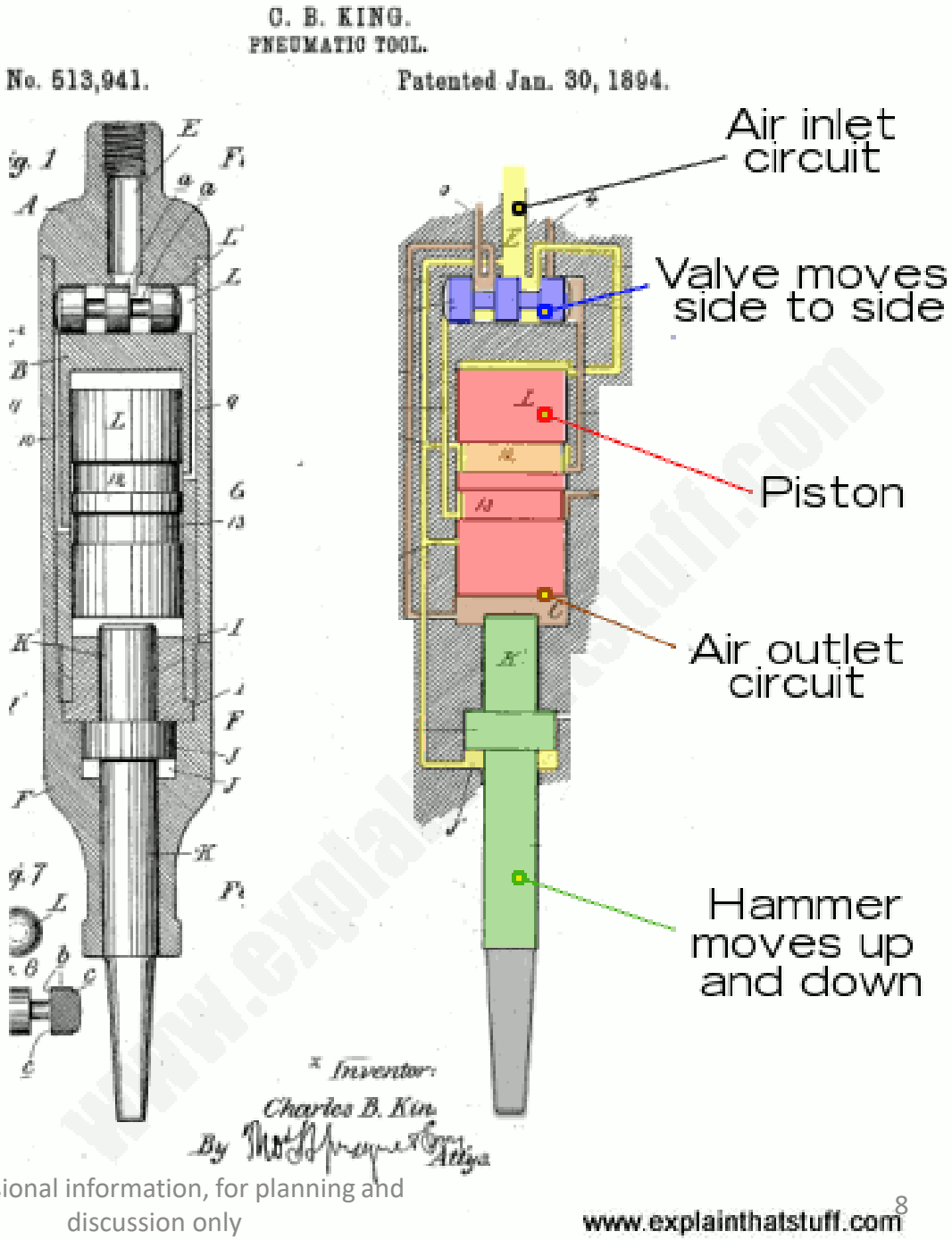

Predecisional information, for planning and discussion only

Hammer Drill (slowed)

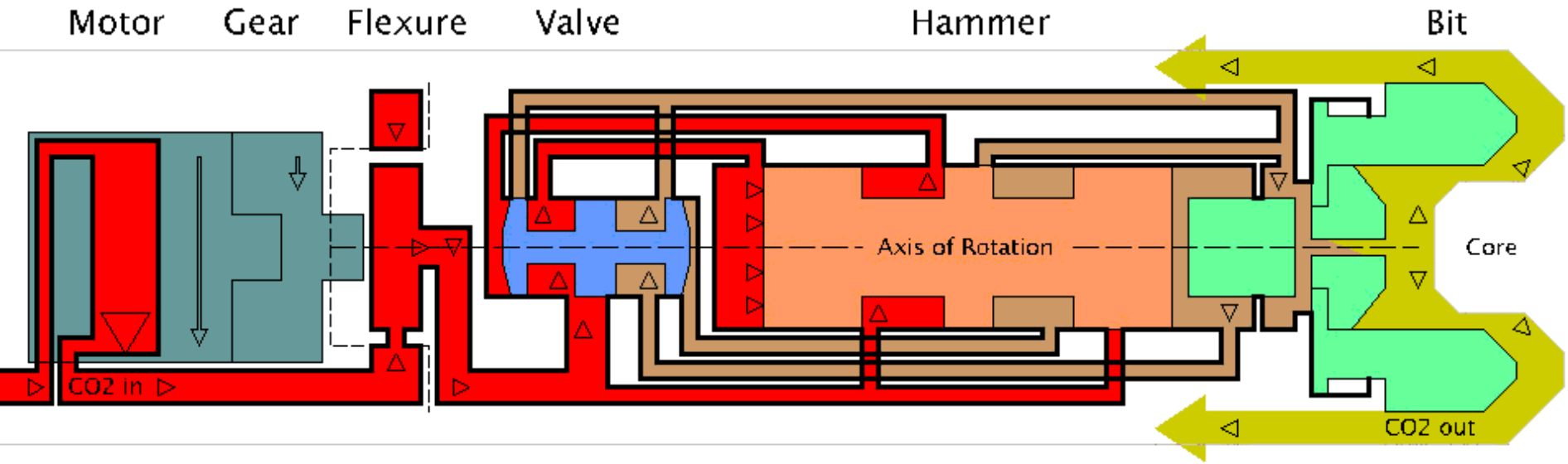

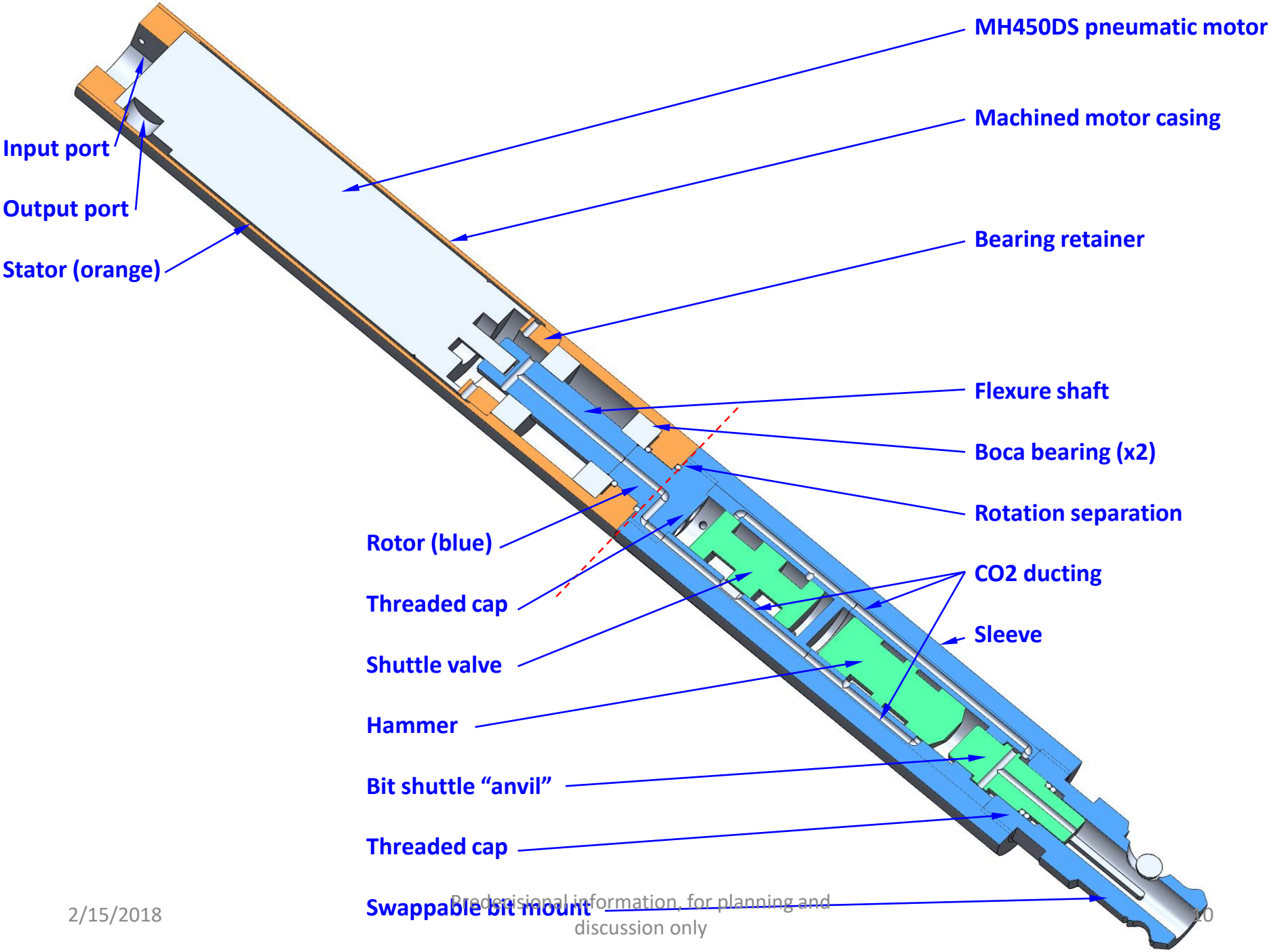

Predecisional information, for planning and discussion only

1 Gen Manufactured (test reciprocating mechanism)

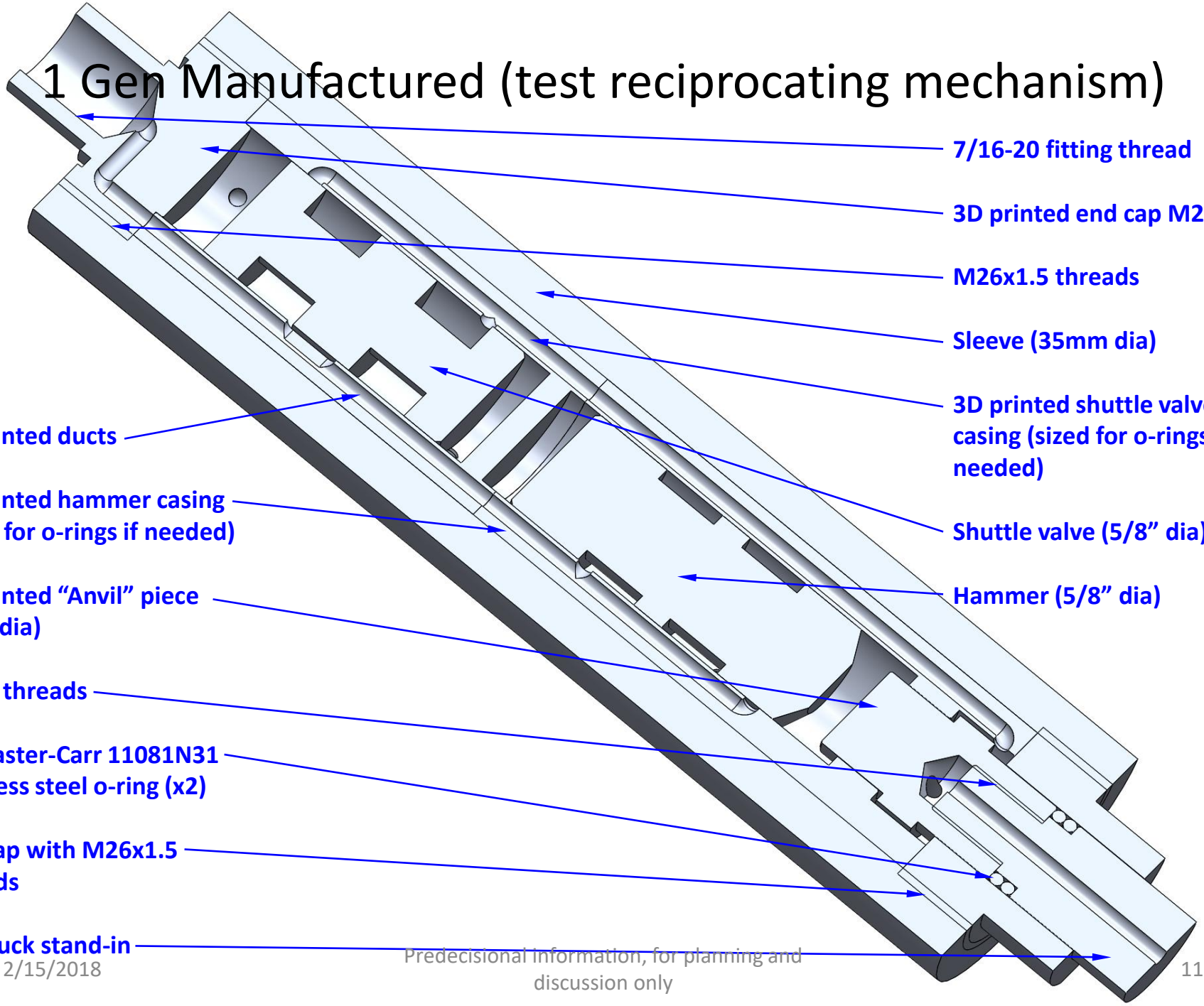

Predecisional information, for planning and discussion only

3D-Printed Stainless (316 alloy) Hardware

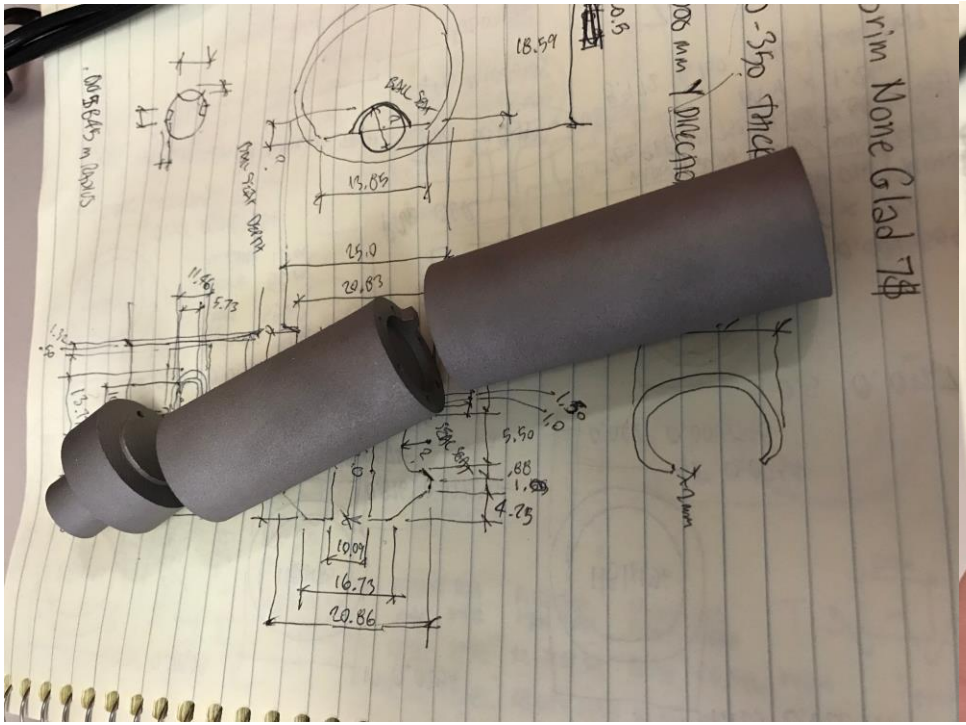

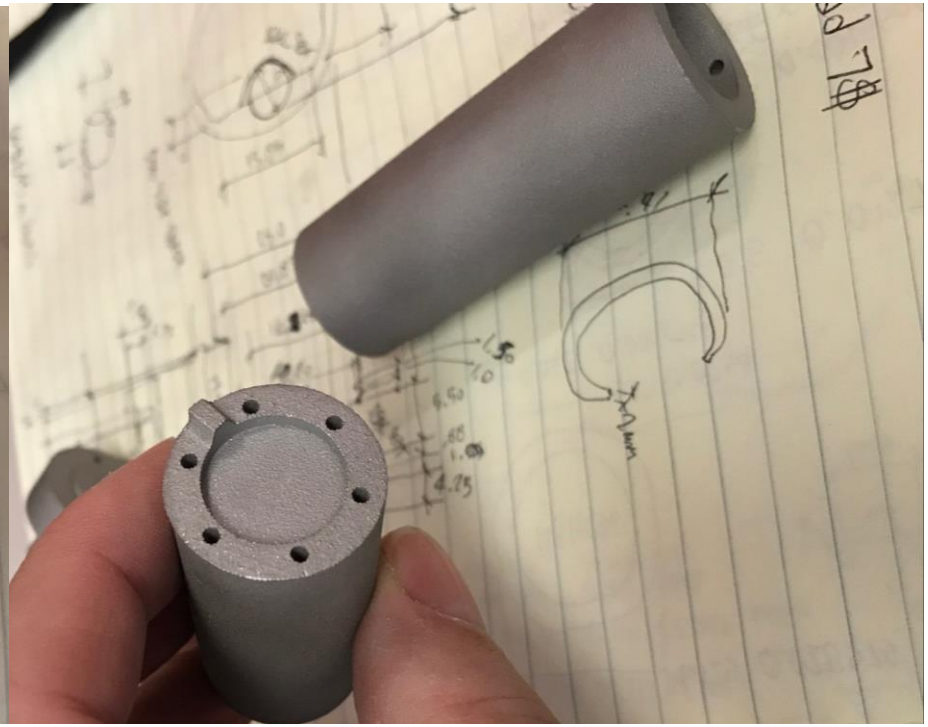

Commercial "Micro"-Hydraulic Motor

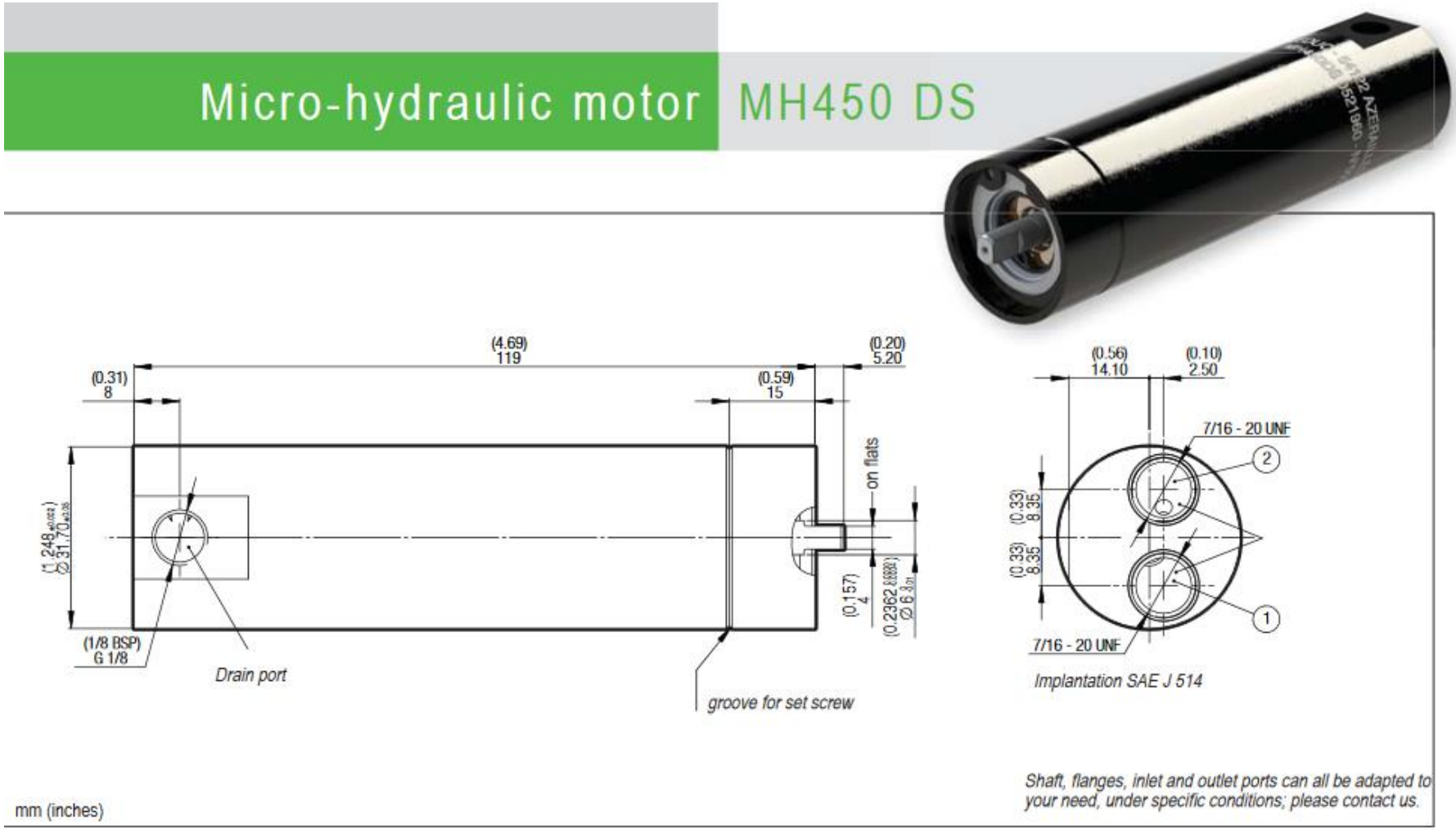

from http://www.hydroleduc.com/images/links/catalogues/hydro%20leduc%20documentation_en/micro%20hydraulics/hydroleduc_micro_en.pdf

Fused Silica Capillary Tubing

Polymicro Technologies™
Polyimide Coated
Fused Silica Capillary Tubing

molex

Delivering industry-leading performance including tight ID and OD tolerances, Polymicro Technologies™ polyimide coated TSP and high-temperature TSG capillary tubing ensures precise flow-rate control of liquids and gases for Scientific, Industrial and Medical applications

Features and Benefits

Pure synthetic fused silica capillary	Mirror-smooth interior surfaces for stable flow of liquids and gases. Low metal ion content provides an inert inner surface. Facilitates efficient cleaving or cutting for custom lengths of tubing
Wide range of internal and external diameters with tight dimensional control	Enables design flexibility and operation efficiency. Superior dimensional stability over long lengths of tubing. External diameters mate with existing industry equipment connector technologies
TSP and TSG polyimide coatings	Offer excellent abrasion resistance during handling and usage. Resist temperatures up to +350ºC for TSP; up to +400ºC for TSG. Allow product flexure with superior bend radius
Custom options available	Boost design efficiency. Provide small production values at reasonable costs. Ensure prototype methodology is directly scalable to high volume with minimal design costs

Polymicro Technologies™
Polyimide Coated Capillary Tubing

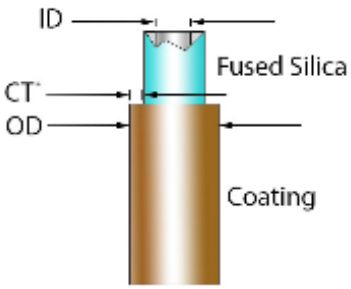

Fused Silica Capillary Diagram

from https://www.molex.com/molex/products/family?key=polymicro_capillary_tubing&channel=products&pageTitle=Introduction

We are using 1000 meters of model TSP450670 (450µ ID, 625µ OD+24µ polyimide coating)

Liquid CO2 Pump

powers downhole assembly

- Downhole assembly powered by pressurized liquid CO_2.
- Liquid CO_2 can be ordered via JPL iProcurement.

Model SFC-24 Pump

Positive Displacement Pump for Liquid CO_2

Reliable, Accurate and Consistent Performance

The Model SFC-24 Positive Displacement Pump provides reliable, accurate and reproducible pumping of liquid CO2 for SFC, SFE, and other applications. The SFC-24 is available with a maximum flow rate of 24 mL/min, and can reach pressures to 10,000 psi.

The pump's constant pressure mode features a selectable pressure set point. The flow rate auto-adjusts to maintain pressure. The SFC-24 features integrated cooling systems using Peltier thermoelectric modules.

Easy Maintenance

The cooling is fully self-contained within the pump cabinet, eliminating the need for external refrigeration units and the associated piping, coolants, and Freon. Peltier technology is 100% solid state.

Standard Features

- All aluminum pump heads (for heat transfer)
- Integrated cooling system using Peltier thermoelectric modules
- Stainless Steel fluid path (other than pump heads)
- In-line electronic pressure transducer
- Simple front panel keypad controls with led display
- Motor stall detector
- Outlet filter
- RS232 and remote voltage control standard

All Pumps carry a 3-Year Warranty.

PSS1019-Rev D-041715

SSI Scientific Systems, Inc.
Designed from Experience. Built for The Future.
www.ssihplc.com

Scientific Systems, Inc.
349 North Science Park Road
State College, PA 16803

Phone: 800-441-4752 • 814-234-7311
Fax: 814-234-2469 • 814-238-6072
Email: sales@ssihplc.com

from https://www.instrument-solutions.com/wp-content/uploads/SSI-Scientific-supercritical-SFC-24-Pump.pdf

CO_2 Equation of State

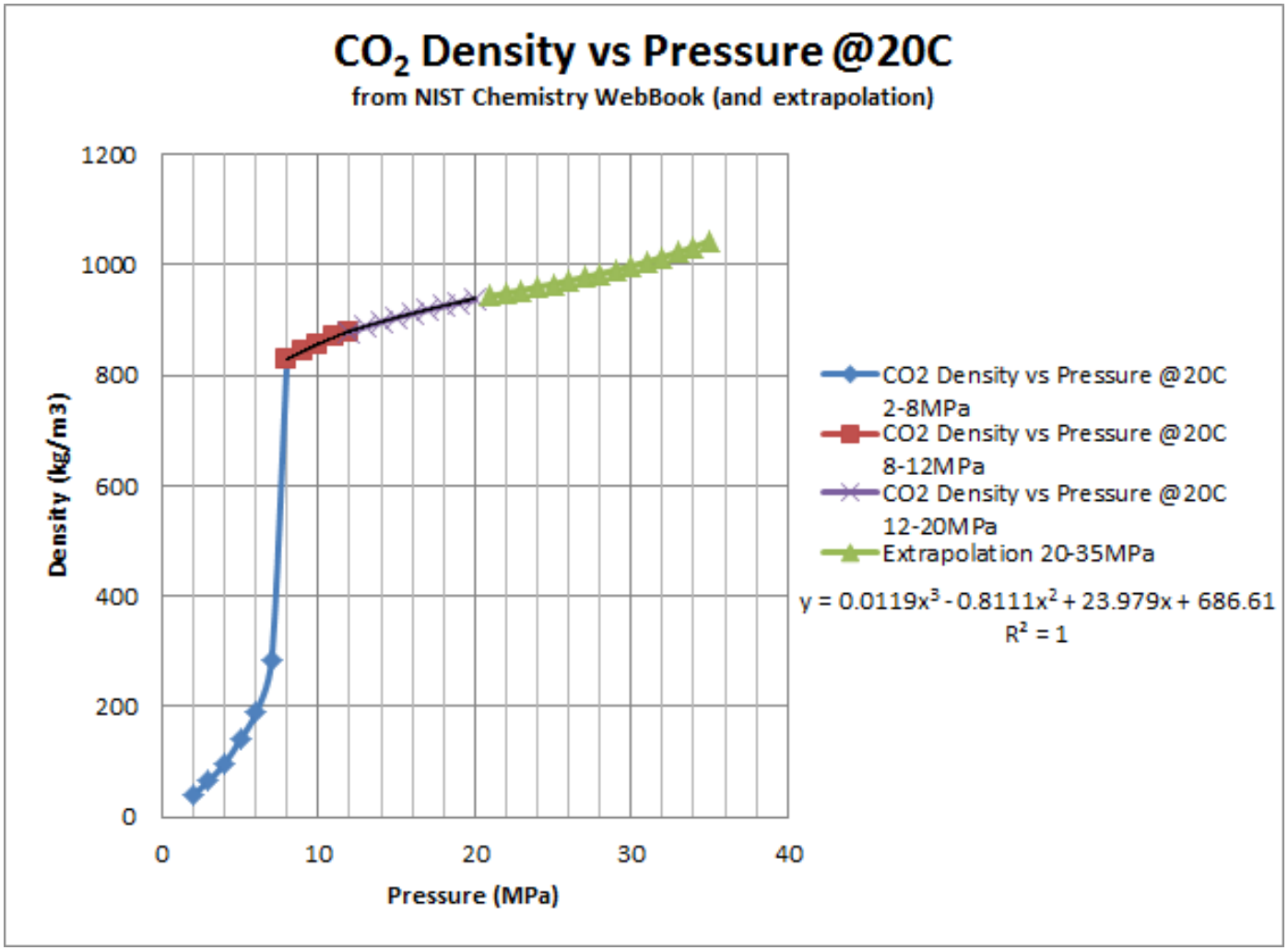

- Liquid flashes to vapor at ~8 MPa @ 20°C

Compressed CO_2 as Energy Source

- CO_2 compressed to 35 MPa (5000 PSI) releases >800 Joules per gram as it decompresses.
- 73% of energy comes as liquid decompresses from 35 to 8 MPa.
- 27% comes as vapor decompresses from 8 MPa to zero.

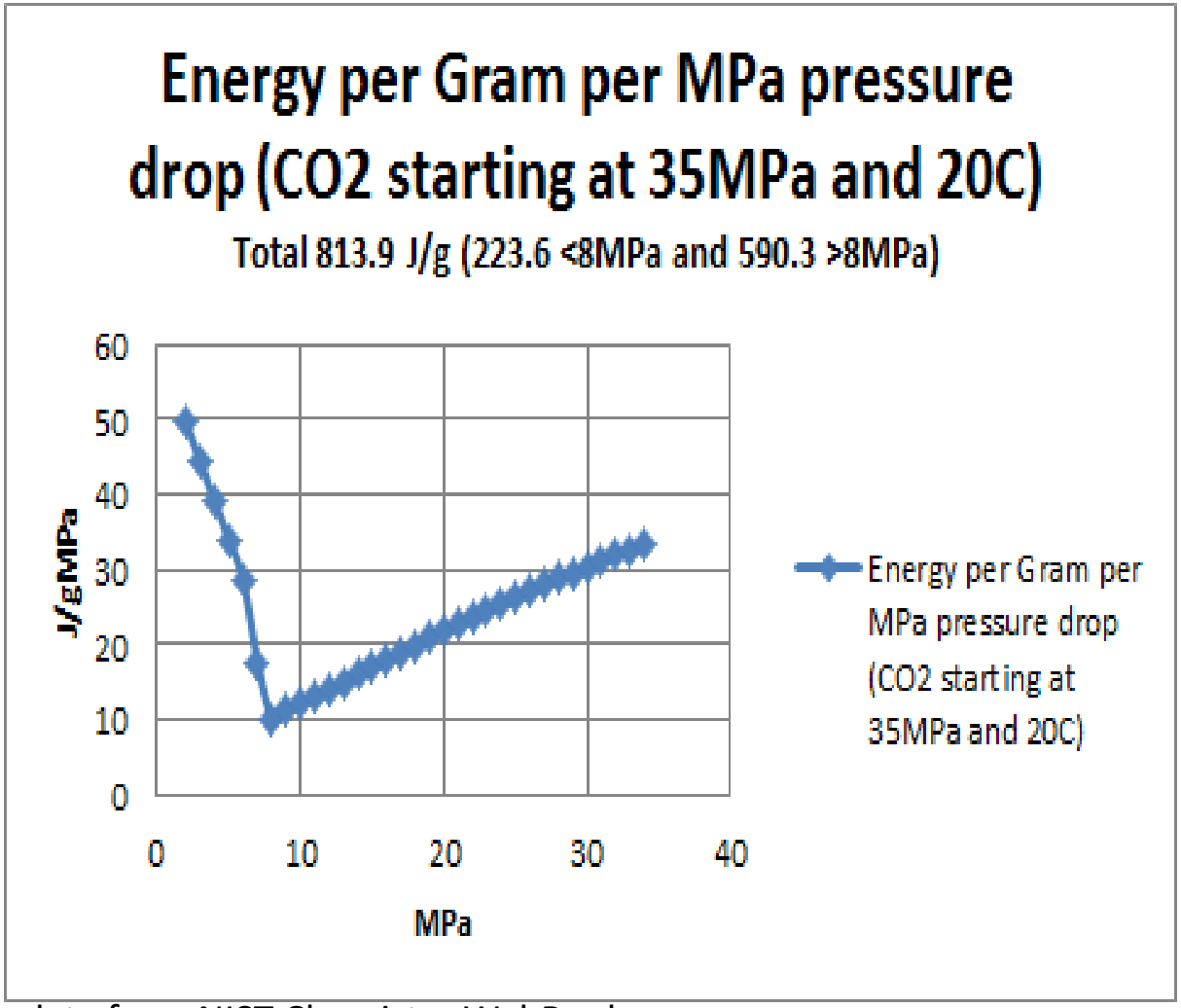

data from NIST Chemistry WebBook

24 ml/min @35MPa = 342 Watts of mechanical power

Predecisional information, for planning and discussion only

Summary and Conclusions

- Wireline rotary-percussive downhole assembly powered by compressed liquid CO2 offers a way to drill nearly unlimited distances in competent rock with very little mass overhead (extra mass per meter of extra distance).
- Entire downhole assembly is composed of parts rated at many hundreds of degrees Celsius for dry heat sterilization on way to Mars.
- Current effort should demonstrate key elements of concept this year.