Receivers, Antennas, and Systems at Terahertz Frequencies

Goutam Chattopadhyay

Jet Propulsion Laboratory, California Institute of Technology, Pasadena, CA, USA

© 2018 California Institute of Technology. Government sponsorship acknowledged.

Acknowledgement

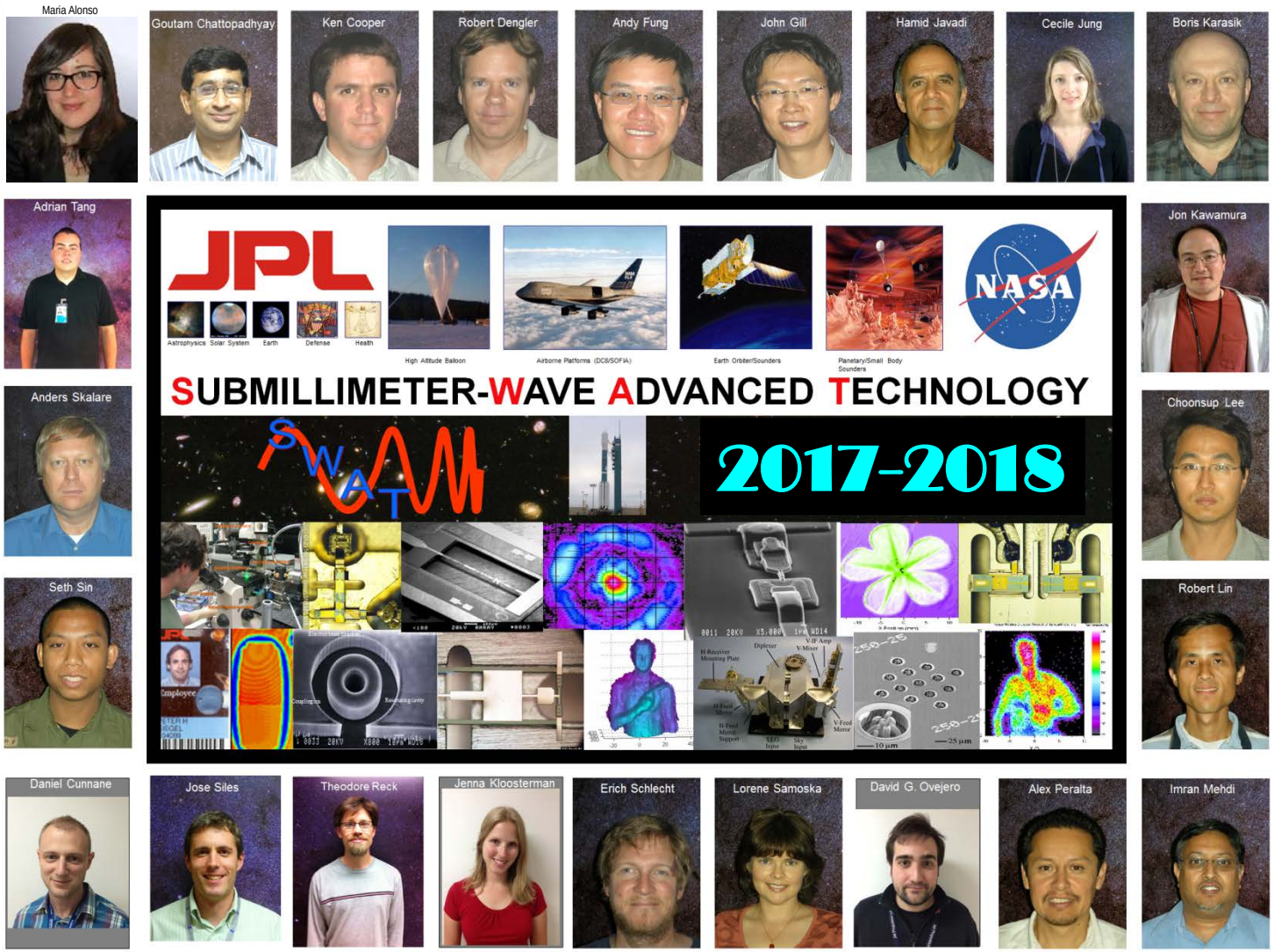

This work was carried out at the California Institute of Technology, Jet Propulsion Laboratory, under contract with the National Aeronautics and Space Administration.

Terahertz (Submillimeter) Waves

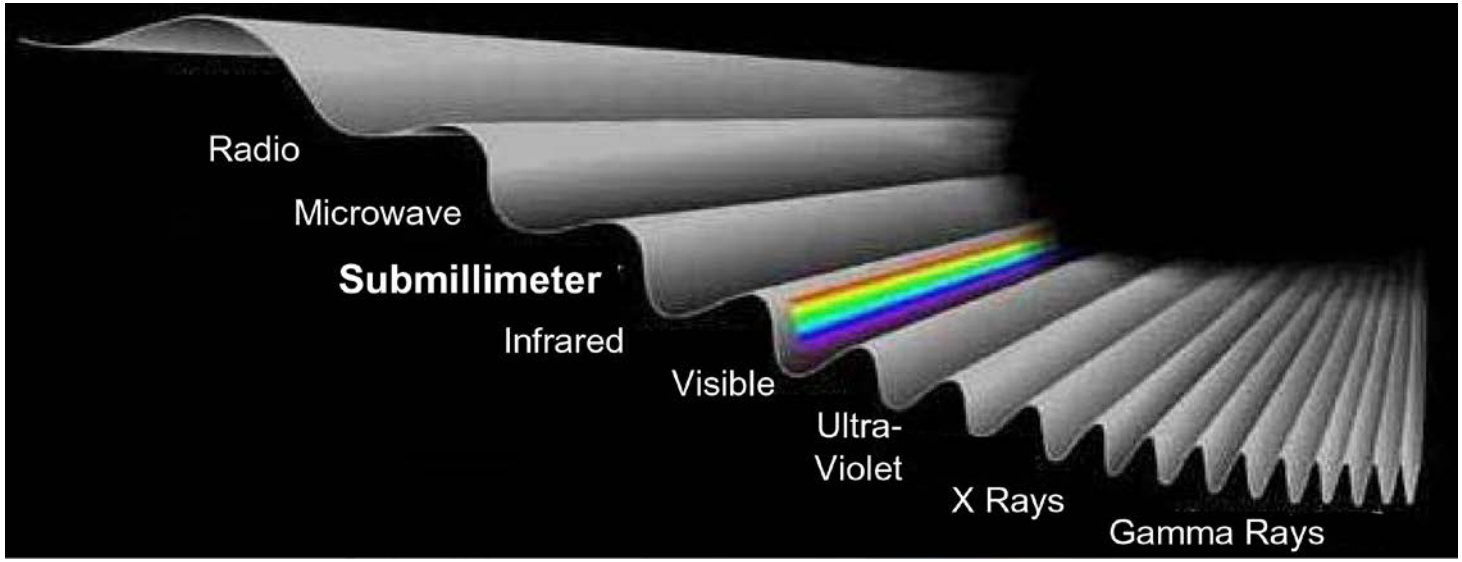

Loosely defined: 1 mm > λ > 100 μm

300 GHz < ν < 3 THz

Most of the radiation in the Universe is emitted at submillimeter-wavelengths, peaking at 3 THz (if we exclude Cosmic Microwave Background).

Terahertz Science: Big Bang

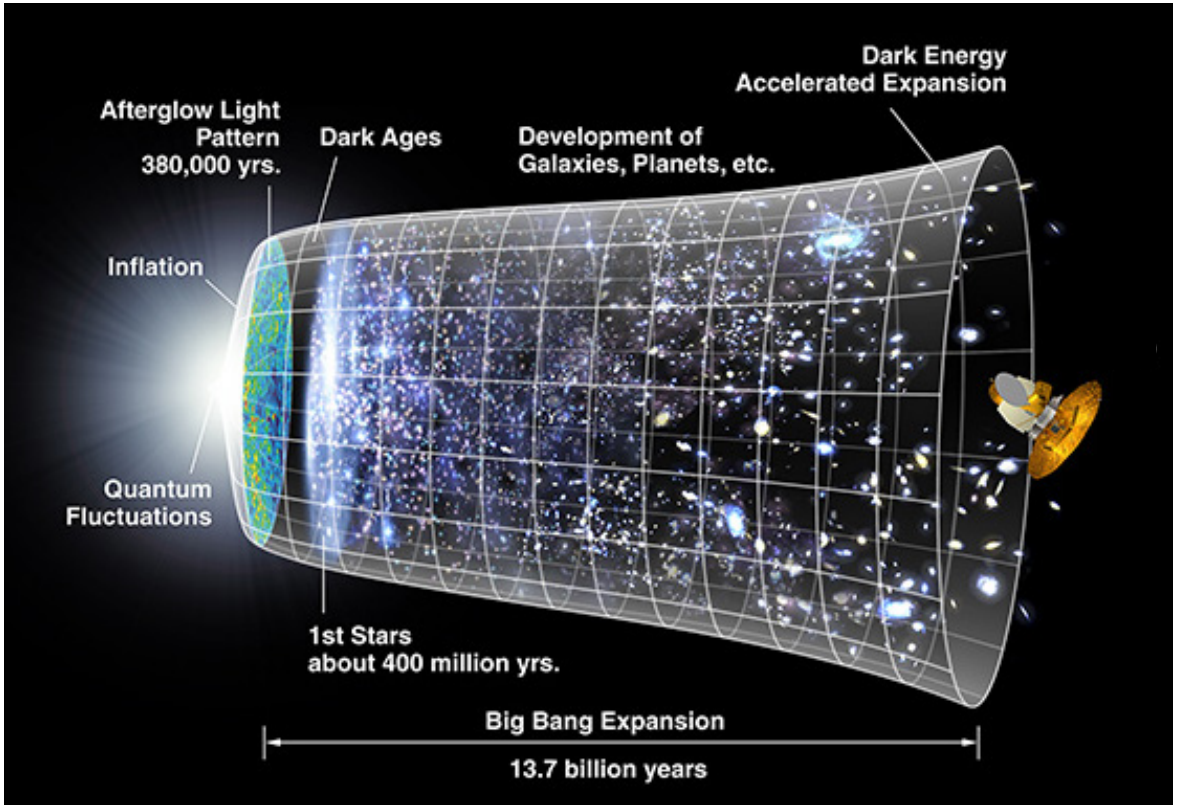

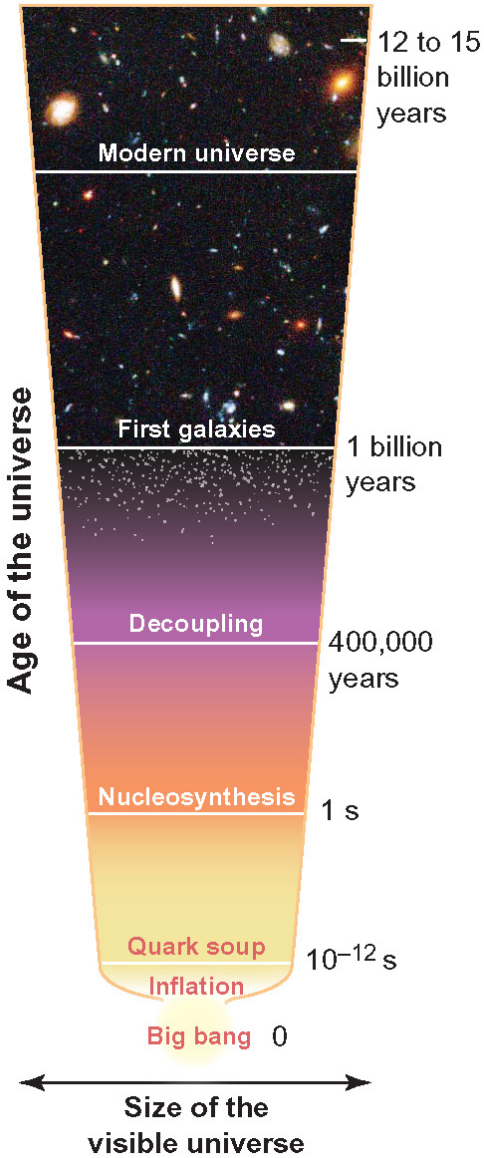

History of our Universe: Started with a Big Bang, and here we are, after 13.8 billion years!

Terahertz Science: Water

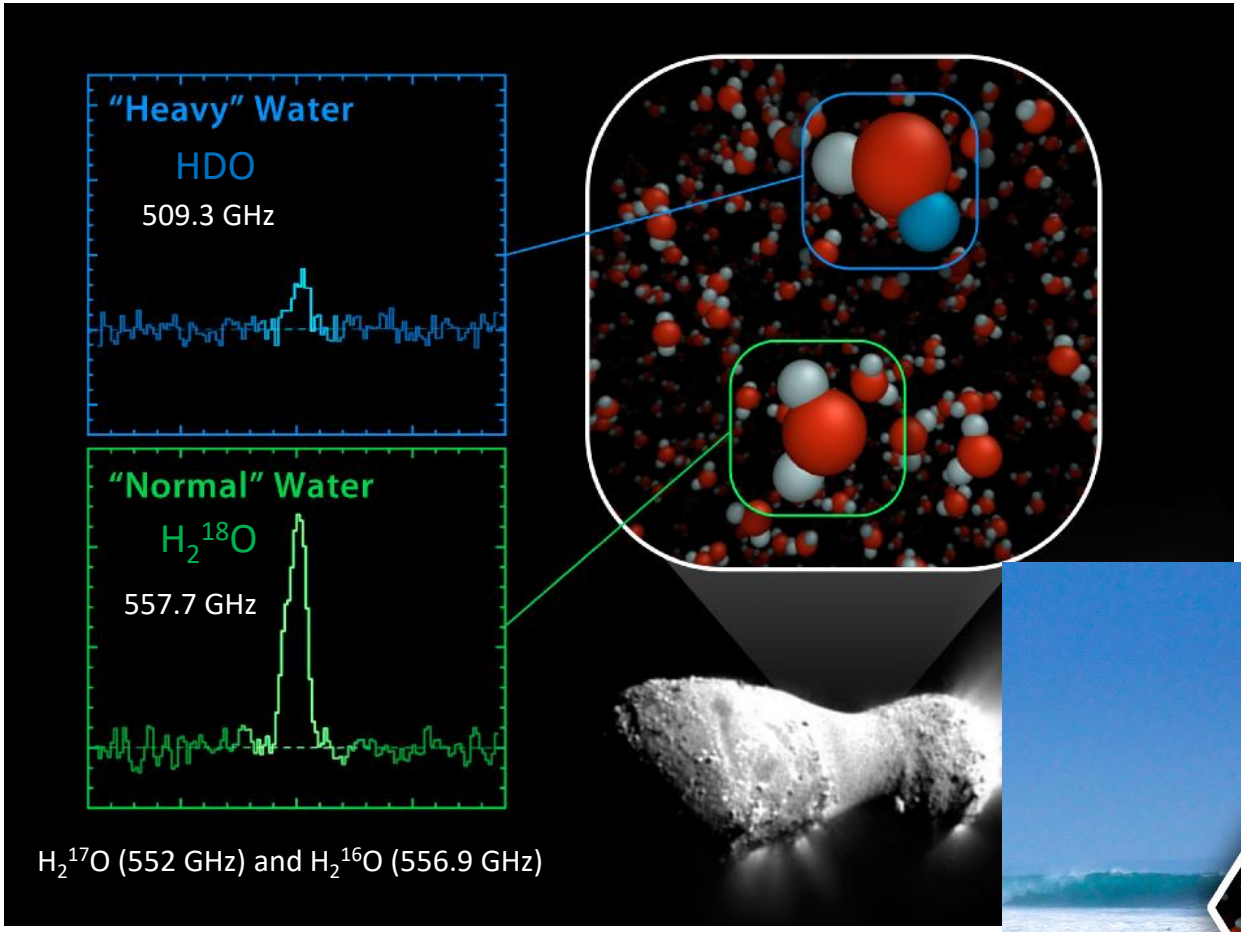

"Earth's water may have come from comets!"

Herschel Space Observatory's HIFI Instrument (JPL).

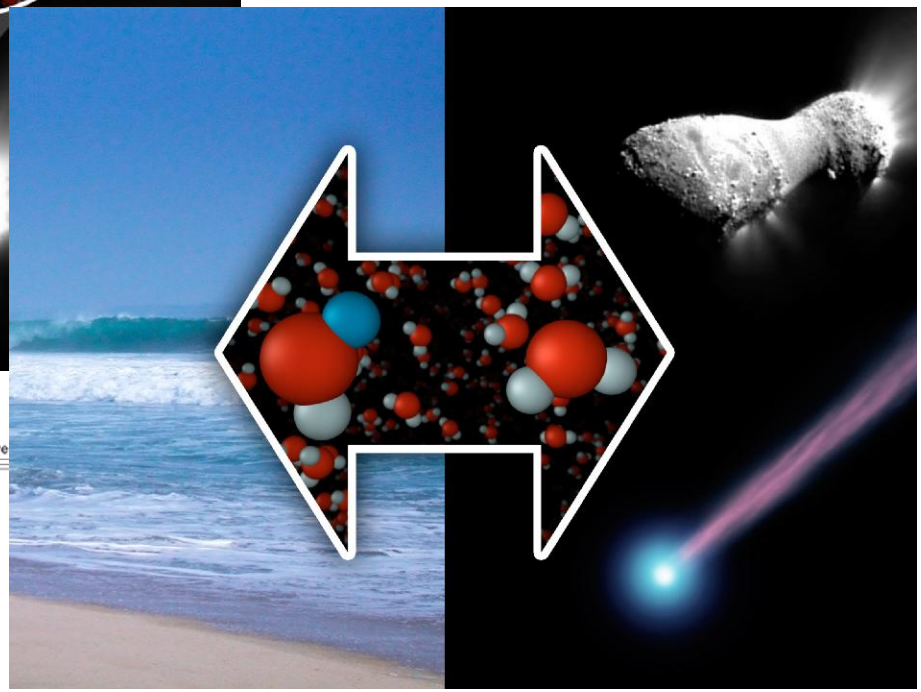

LETTER Nature, October 2011

doi:10.1038/nature

Ocean-like water in the Jupiter-family comet 103P/Hartley 2

Paul Hartogh[1], Dariusz C. Lis[2], Dominique Bockelée-Morvan[3], Miguel de Val-Borro[1], Nicolas Biver[3], Michael Küppers[4], Martin Emprechtinger[2], Edwin A. Bergin[5], Jacques Crovisier[3], Miriam Rengel[1], Raphael Moreno[3], Slawomira Szutowicz[6] & Geoffrey A. Blake[2]

Terahertz Science: ROSETTA

Science, Jan. 23, 2015

MIRO Instrument on ROSETTA Orbiter

Subsurface properties and early activity of comet 67P/Churyumov-Gerasimenko

Samuel Gulkis,[1]‡ Mark Allen,[1] Paul von Allmen,[1] Gerard Beaudin,[2] Nicolas Biver,[3] Dominique Bockelée-Morvan,[3] Mathieu Choukroun,[1] Jacques Crovisier,[3] Björn J. R. Davidsson,[4] Pierre Encrenaz,[2]* Therese Encrenaz,[3]* Margaret Frerking,[1] Paul Hartogh,[5] Mark Hofstadter,[1] Wing-Huen Ip,[6] Michael Janssen,[1] Christopher Jarchow,[5] Stephen Keihm,[1] Seungwon Lee,[1] Emmanuel Lellouch,[3] Cedric Leyrat,[3] Ladislav Rezac,[5] F. Peter Schloerb,[7,1] Thomas Spilker[1]†

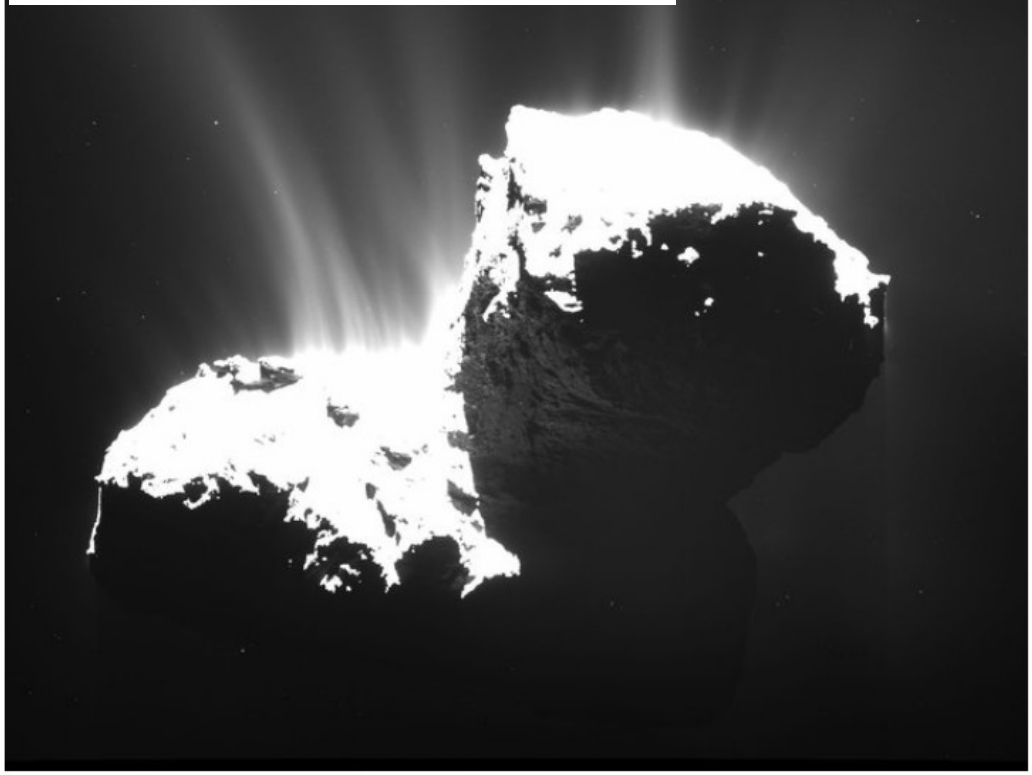

November 2014 image of 67P comet showing faint gas and dust.

Total water production rate varied from 0.3 kg/sec (June 2014 – 3.9 AU) to 1.2 kg/sec (August 2014 – 3.6 AU).

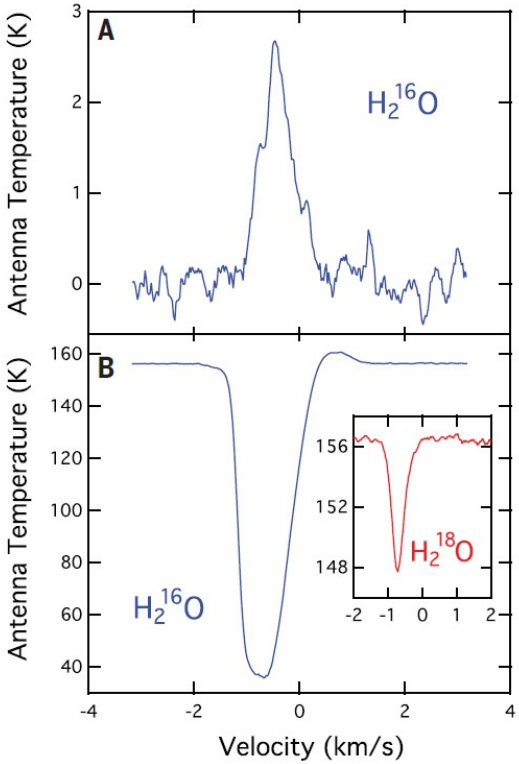

Fig. 1. Sample spectra of the 1(1,0) – 1(0,1) transitions of $H_2^{16}O$ and $H_2^{18}O$ lines at 556.939 GHz and 547.676 GHz, respectively, obtained with MIRO in nadir-viewing geometry.

Potential Terahertz Science: Enceladus

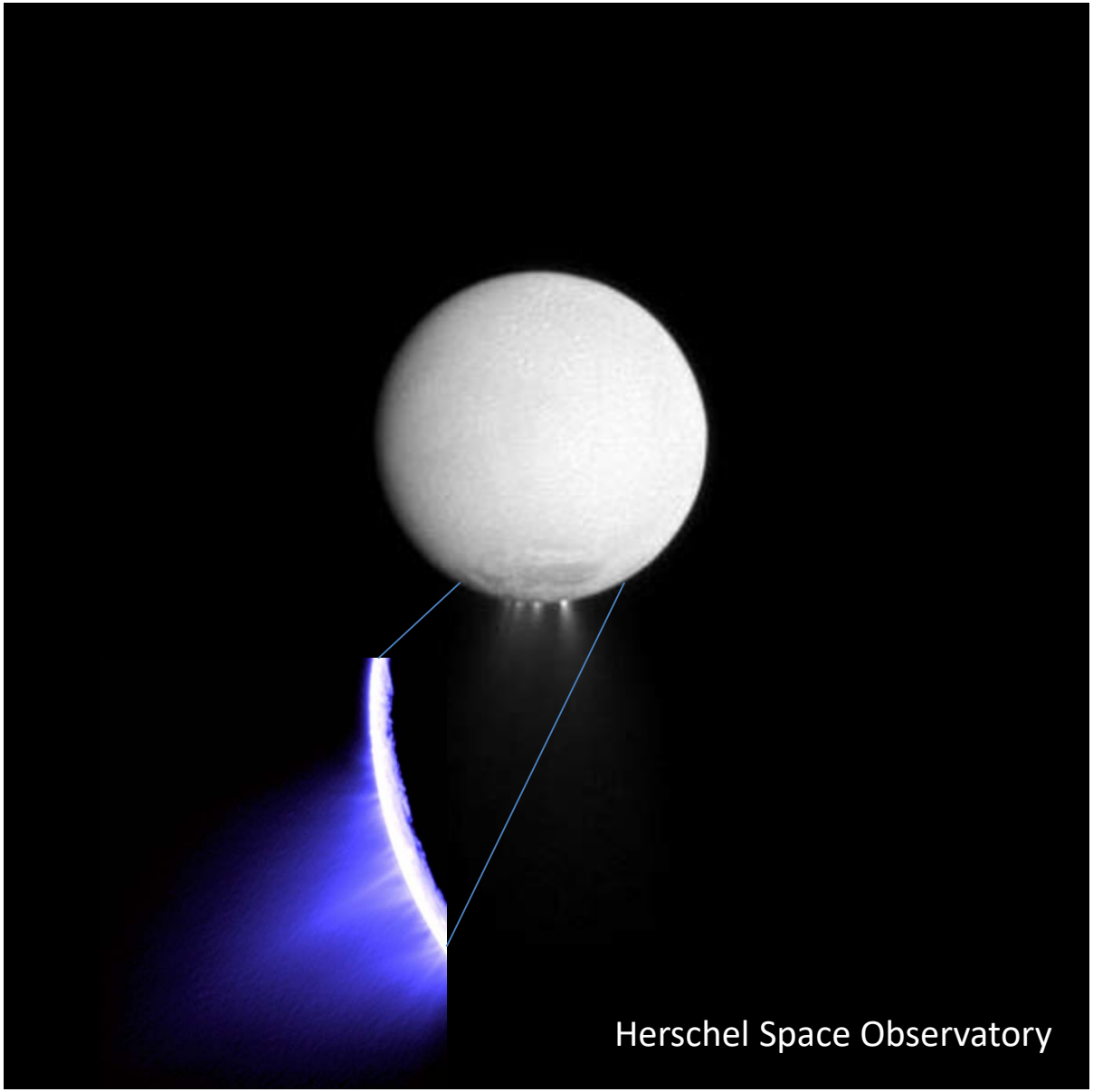

Saturn's moon Enceladus rains down water on Saturn!

Now we know where the water vapor in Saturn's upper atmosphere come from!

Enceladus is the only moon in the Solar System known to influence the chemical composition of its parent planet.

Potential Terahertz Science: Europa

SPACE.COM

TECH SPACEFLIGHT SCIENCE & ASTRONOMY SEA

TRENDING: Skywatching Guide // Space Webcasts // Mars Rover Curiosity // Solar Flares // Space Photos

Jupiter's Icy Moon Europa: Best Bet for Alien Life?

By Nola Taylor Redd, Space.com Contributor | August 22, 2014 06:00am ET

107 Share

30 Tweet

35 Submit

2 Reddit

More

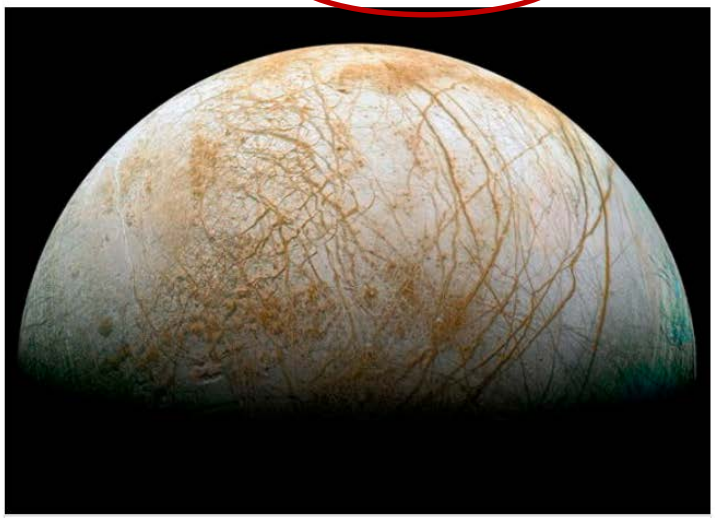

Under a thick crust of ice, Europa might have an ocean warmed by tidal interactions with Jupiter. This tidal flexing could also produce a geologically active core that might in turn create hydrothermal vents on the ocean floor.

Pin it

Credit: NASA/JPL/Ted Stryk

View full size image

WASHINGTON — Jupiter's moon Europa doesn't look like a particularly inviting place for life to thrive; the icy satellite is nearly 500 million miles (800 million kilometers) from the sun, on average.

But beneath its icy crust lies a liquid ocean with more water than Earth contains. This ocean is shielded from harmful radiation, making Europa one of the solar system's best bets to host alien life.

"Europa has the best chance of having life there today," said Britney Schmidt, who studies the moon at the University of Texas at Austin and led the new study appearing in the journal Nature.

Jupiter's moon Europa: Lake theory boosts hopes for life

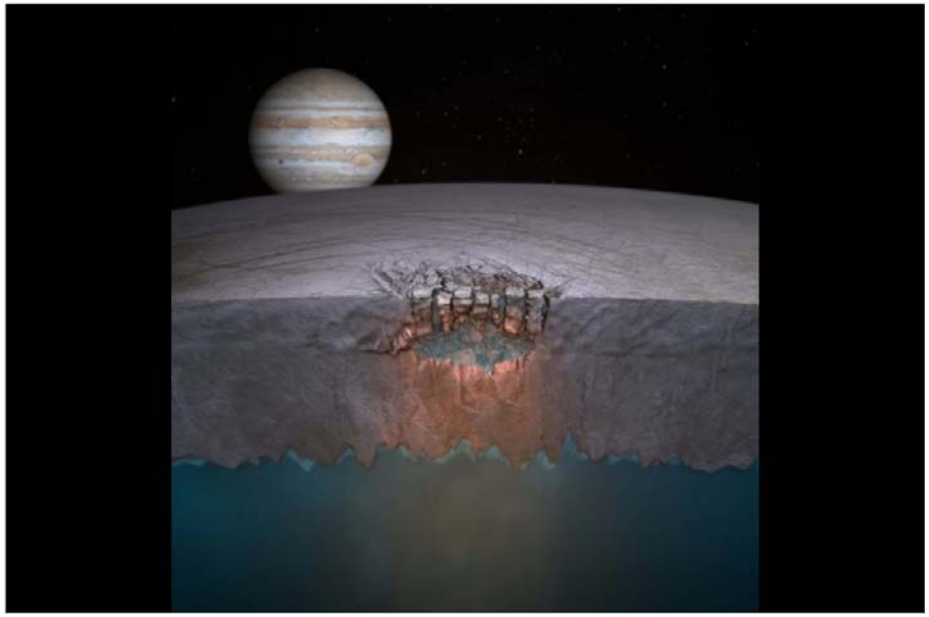

November 16, 2011, Washington Post. Paper in Nature.

Potential Terahertz Science: Europa

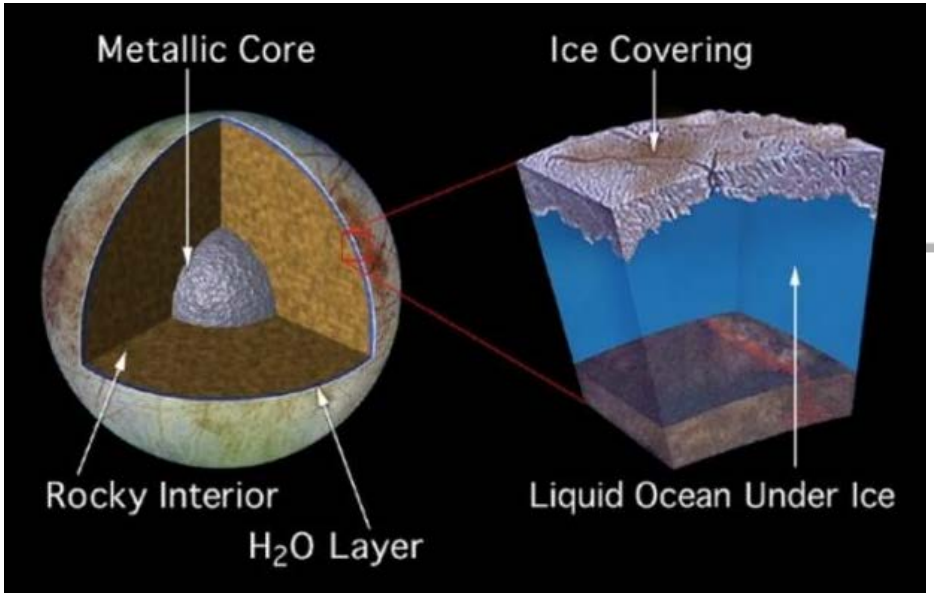

NewScientist Space

Home News In-Depth Articles Opinion CultureLab Galleries Topic Guides

SPACE TECH ENVIRONMENT HEALTH LIFE PHYSICS&MATH

Home | Space | Life | News

Water plumes spark a race to Jupiter moon Europa

- 31 December 2013 by Lisa Grossman
- Magazine issue 2950. Subscribe and save
- For similar stories, visit the Solar System , Space flight and Astrobiology Topic Guide

(NASA/ESA/K. Retherford/SWRI) - This is an artist's concept of a plume of water vapor ejected off the icy surface of Europa. Spectroscopic measurements from NASA's Hubble Space Telescope led scientists to calculate that the plume rises to an altitude of 125 miles and probably rains frost back onto the surface.

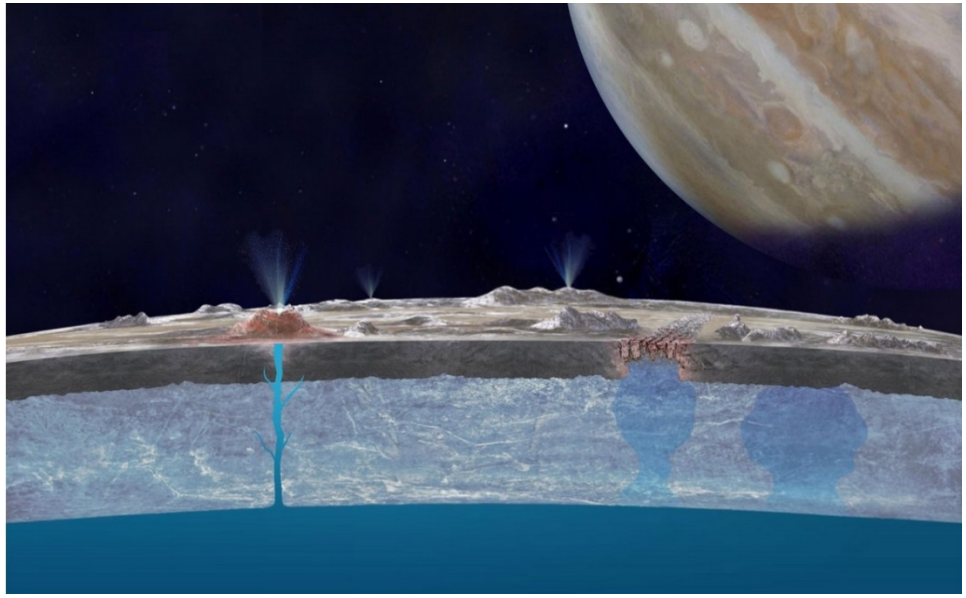

Compact Planetary Instrument

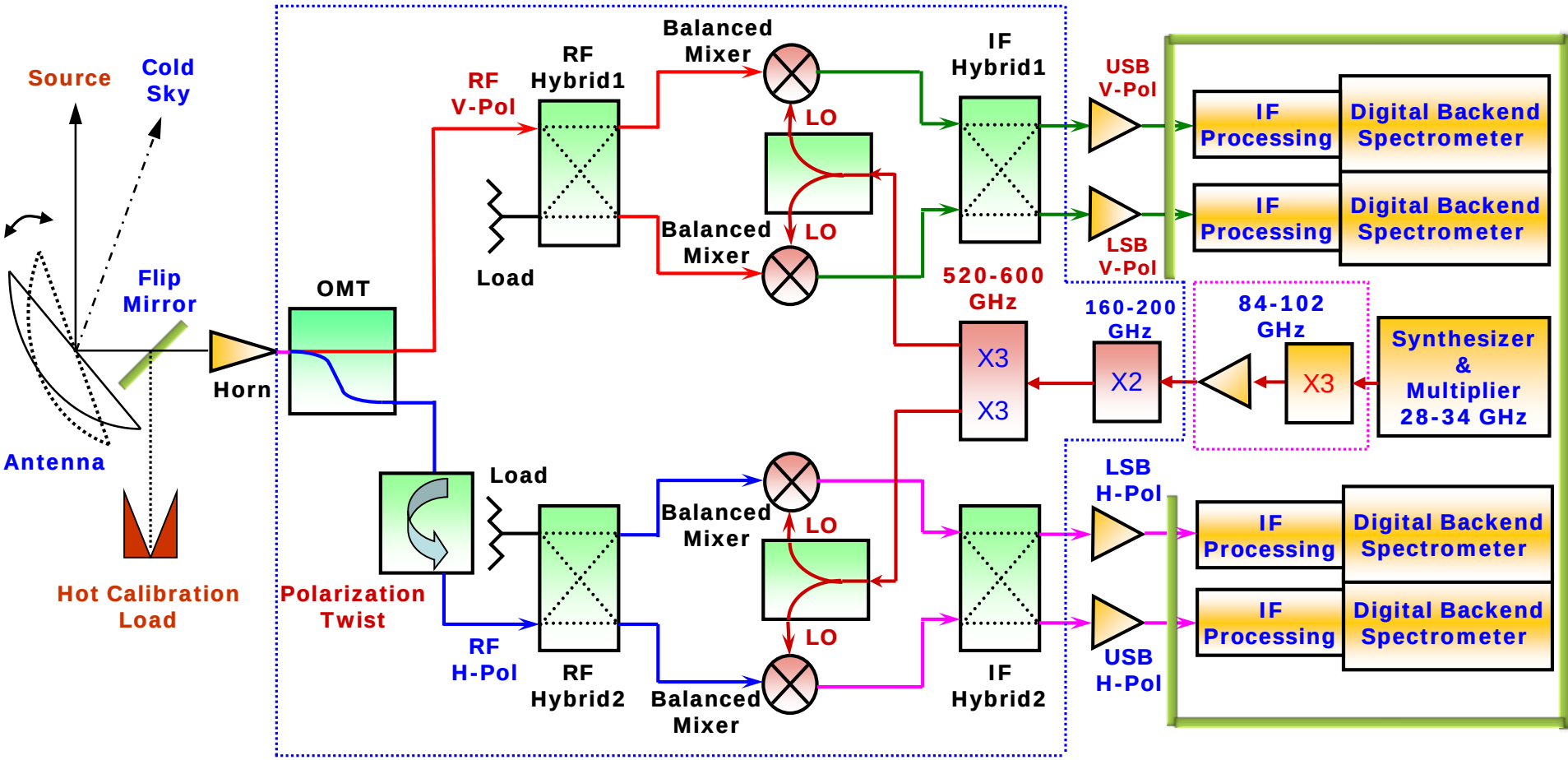

Compact Terahertz Planetary Instrument

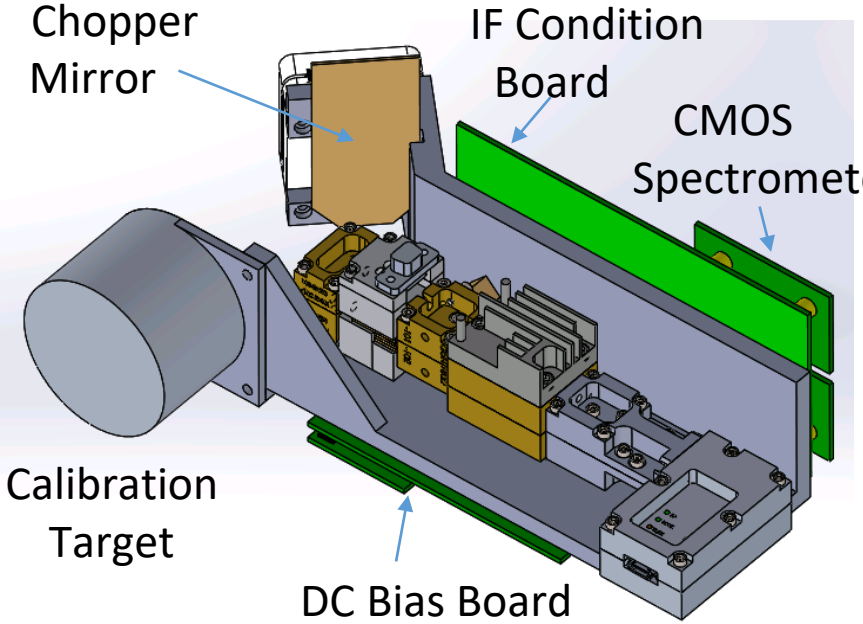

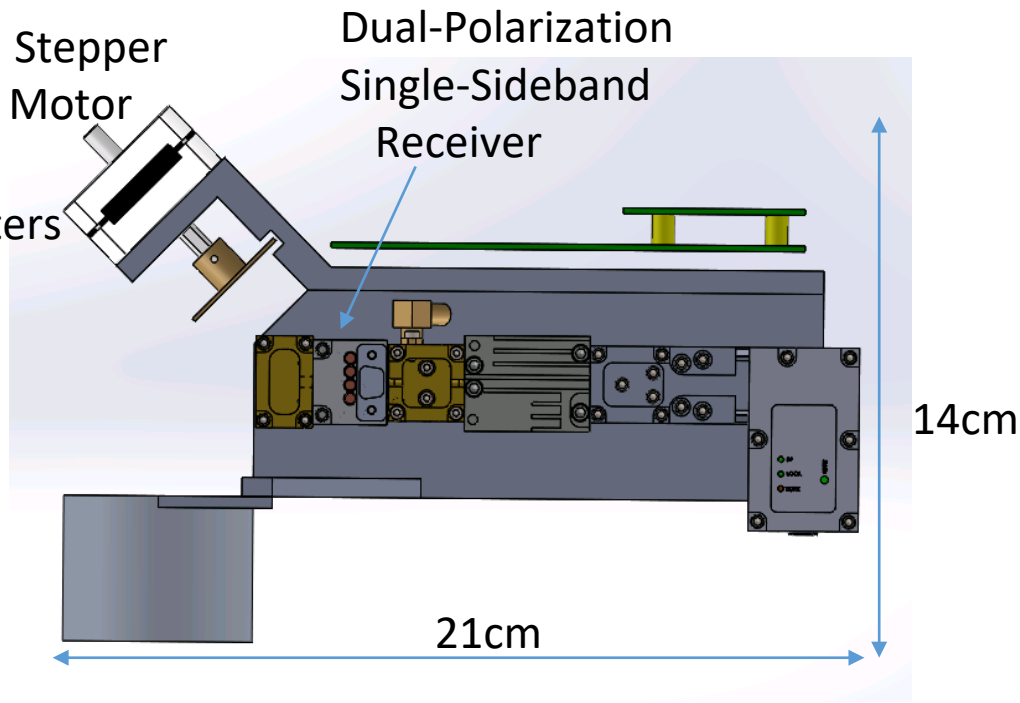

Silicon Micromachined Packaging

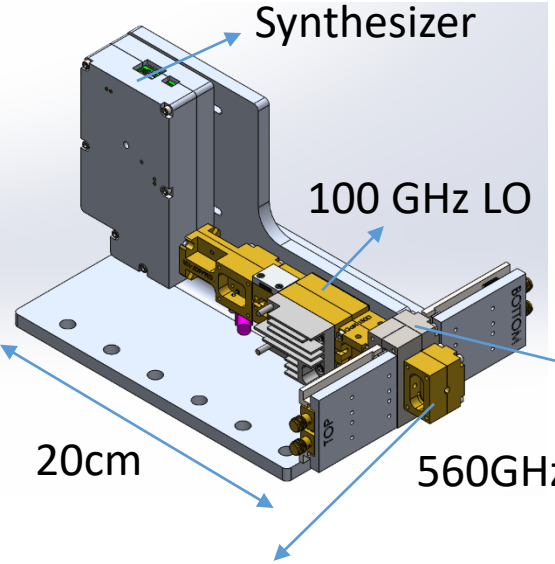

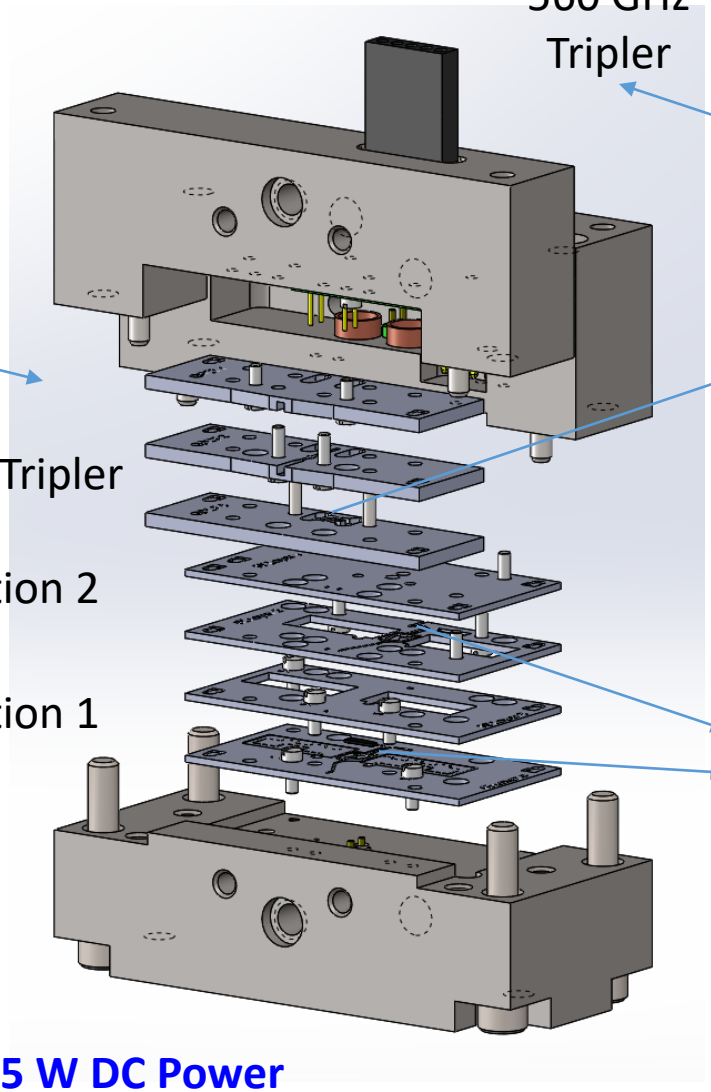

560 GHz
Tripler

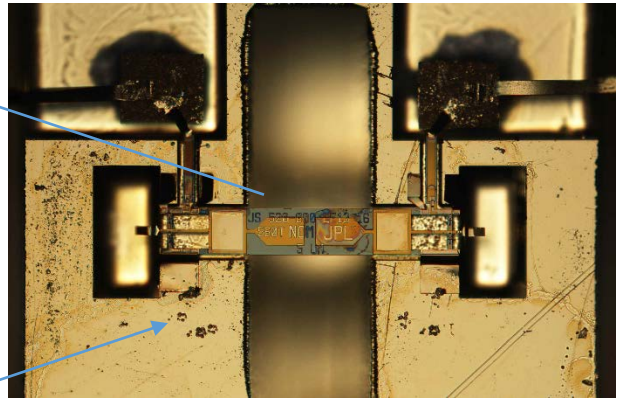

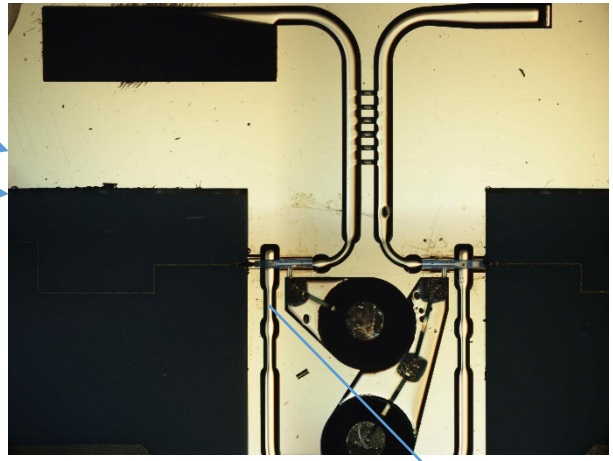

Mixers

40x21x10 cm^3 package, 15 W DC Power

Comparison with State-of-the-Art

	MASS (kg)		POWER (W)	
Component	MIRO or SOA	THIS WORK	MIRO or SOA	THIS WORK
Front ends, optical bench[1]	2.8	0.5	10.0	1.0
Efficient LO synthesizers[2]	4.0	1.0	20.0	9.0
Microwave downconverters	5.8	1.5	30.7	2.0
Two Back-end Spectrometers[3]	6.3	2x2	26.8	2x4
Total	18.9	7.0	87.5	21.0

65nm CMOS Based DDS Based PLL Synthesizer

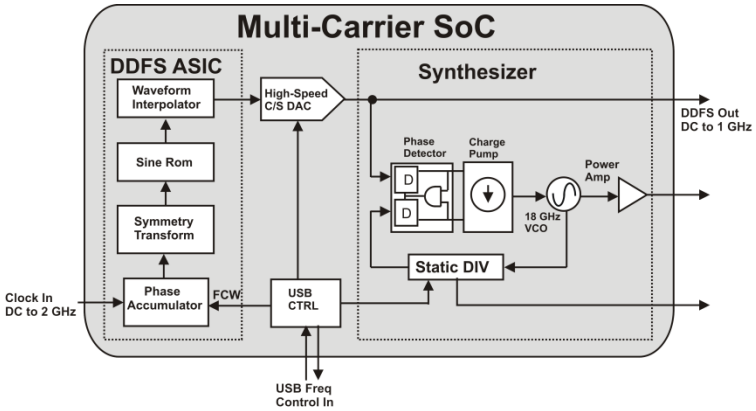

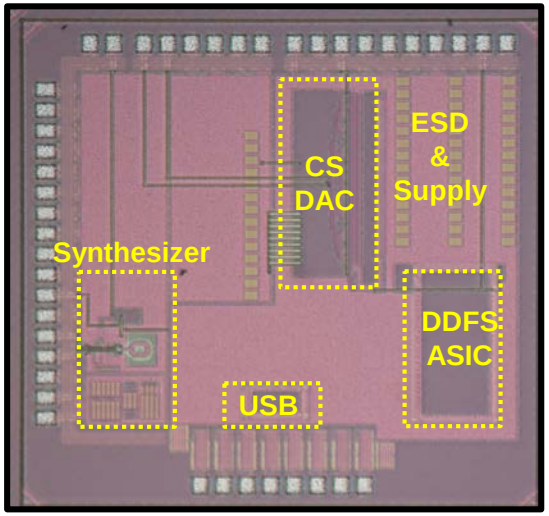

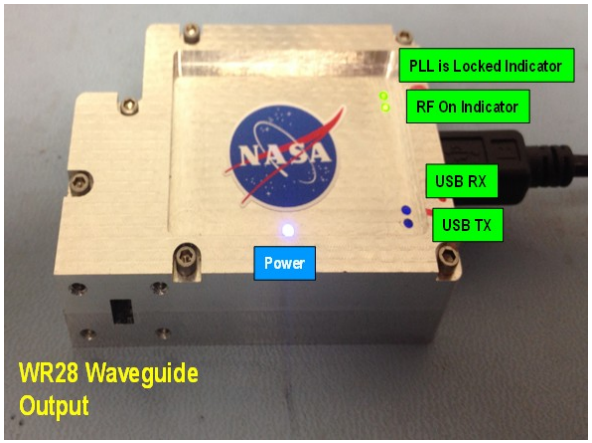

Chip Photograph

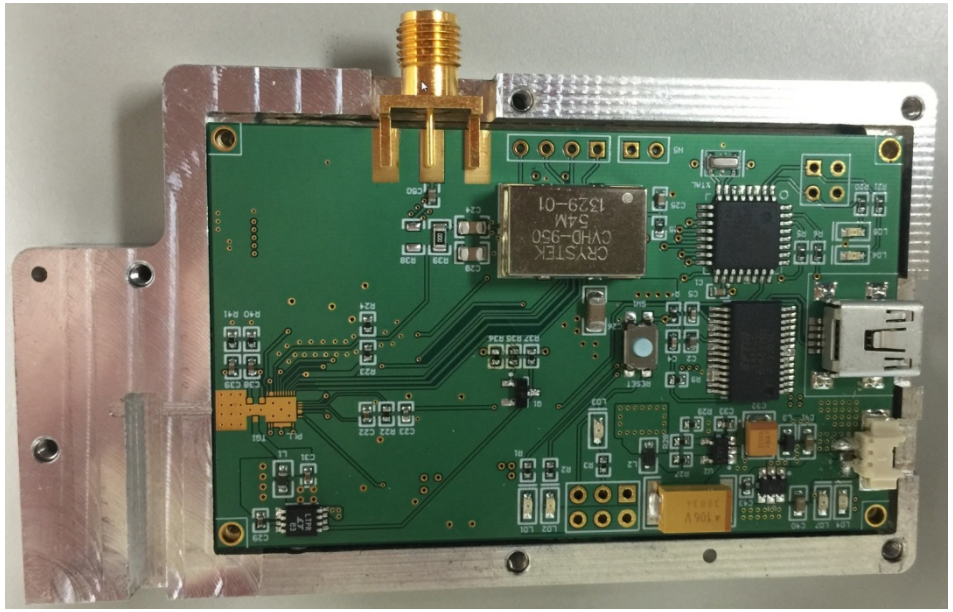

DDFS Output Spectrum

Synthesizer: Comparison with State of the Art

Advanced CMOS SoC

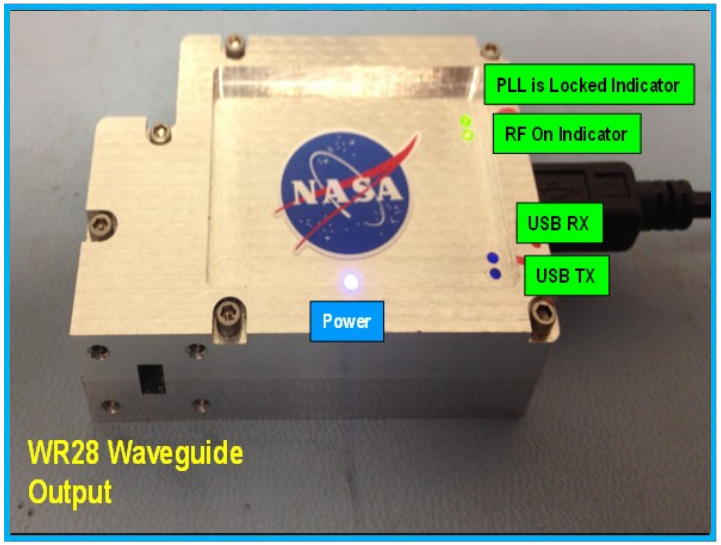

Feature	Value
Size	0.5 X 0.5 mm
Weight	> 0.01 g (50 g)
Power	150mW
Frequency	28.8-33.4 GHz
Phase Noise	-95 dBc/Hz (1M)

Existing DRO Based

Feature	Value
Size	20 x 20 x 5 cm
Weight	> 500 g
Power	> 6 W
Frequency	28-30 GHz
Phase Noise	-100 dBc/Hz (1M)

Ref: A. Tang, et al., "CMOS System-on-Chip Techniques in Millimeter-Wave/THz Instruments and Communications for Planetary Explorations," *IEEE Communications Magazine*, vol. 54, no. 10, pp. 176-182, October 2016.

Silicon Micromachining

Silicon Micromachining

- Etch silicon wafer with plasma using a photolithographic pattern

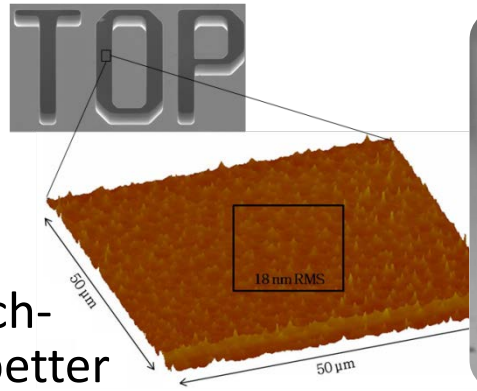

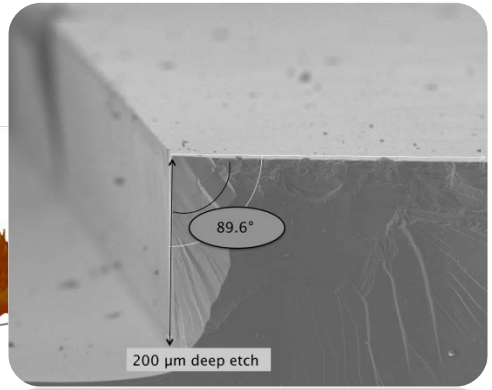

Advantages:

- Potential for lower cost because of batch-processed device fabrication, yielding better uniformity too.
- Lithographically precise feature definitions
- Integration of bias & IF lines on silicon itself. Future potential for integrated CMOS silicon devices.
- Potential for higher density 2D transceiver arrays.

Disadvantages:

- Immature technology: need for process development: **Not anymore!**
- **Challenge of wafer alignment.**

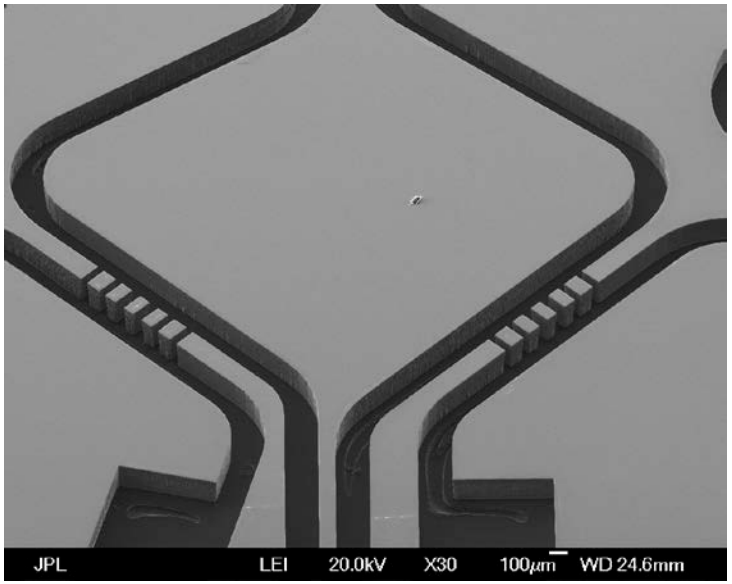

Deep Reactive Ion Etching (DRIE)

- Use of an optimized **Bosch process** to etch the silicon: Alternate exposures of SF_6 and C_4F_8 plasmas. Optimization of power, gas ratio and timing for each step.
- Use the $\boldsymbol{SiO_2}$ **as a hard mask (selectivity of 150:1)** to etch the *Si*

Oxide pre-etch process

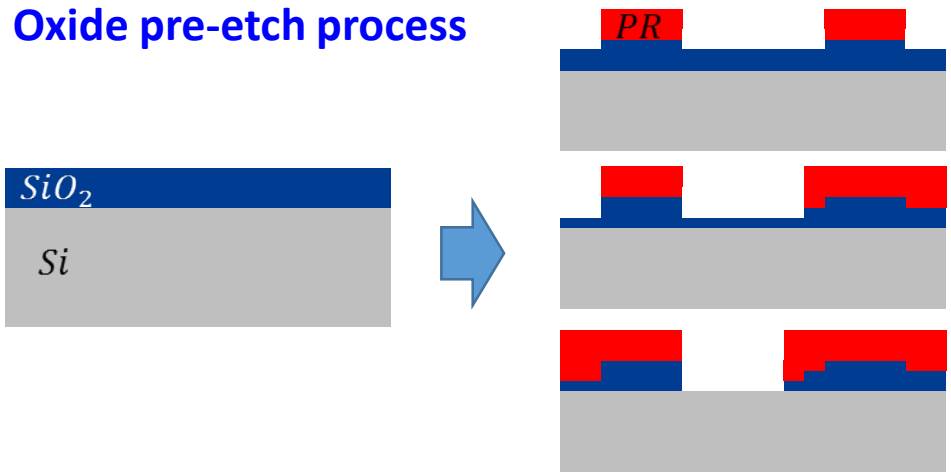

- Use of photoresist to do the SiO_2 patterning
- **Etching of the differential pattern** to ensure precise control of the final target
- Etching using an Inductive Coupled Plasma (ICP) process (etch rate of ~ 70nm/min)

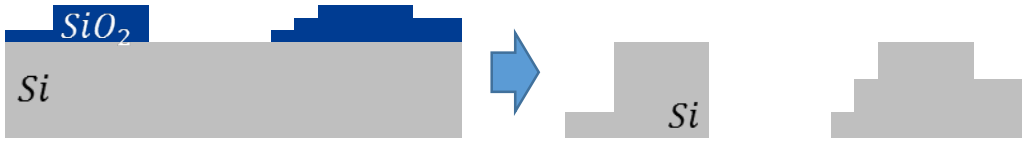

DRIE process

- DRIE process to etch the silicon, with oxide as the sole mask. NO photoresist.

Ref: G. Chattopadhyay, et al., "Micromachined Packaging for Terahertz Systems," *Proceedings of the IEEE*, vol. 105, no. 6, pp. 1139-1150, June 2017.

Deep Reactive Ion Etching (DRIE) at JPL

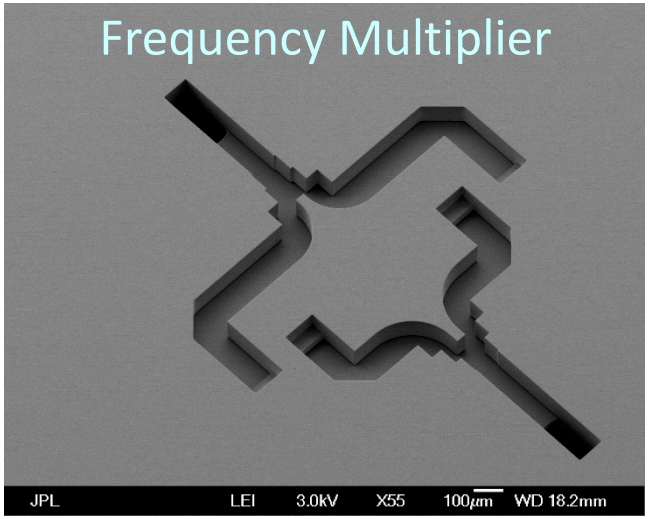

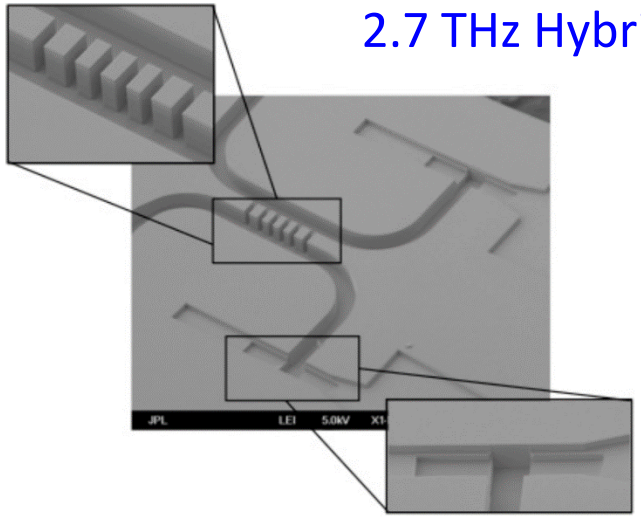

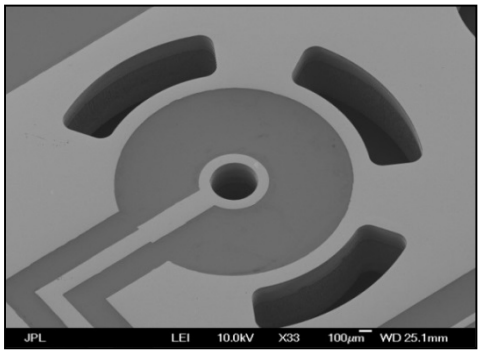

Co-axial IF output

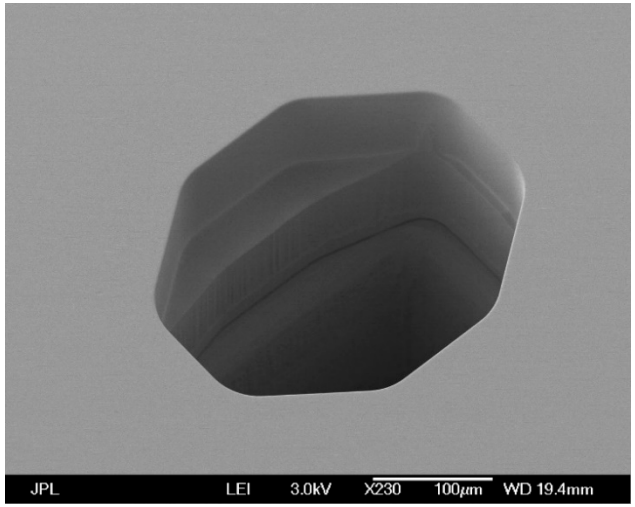

Transition

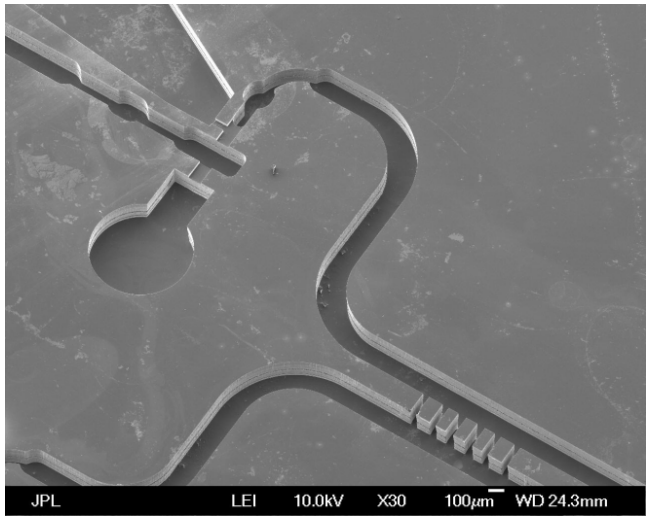

Complete Receiver

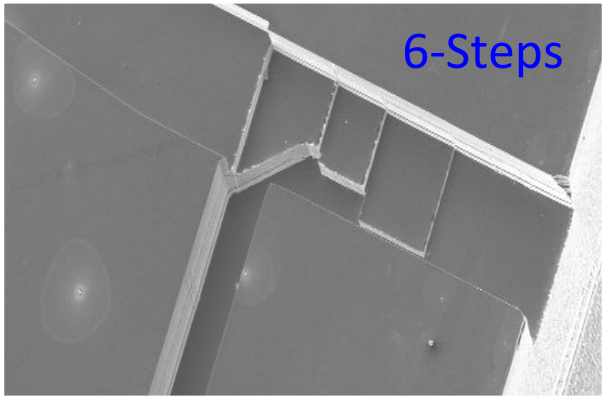

Ortho-Mode Transducer

Deep Reactive Ion Etching (DRIE) at JPL

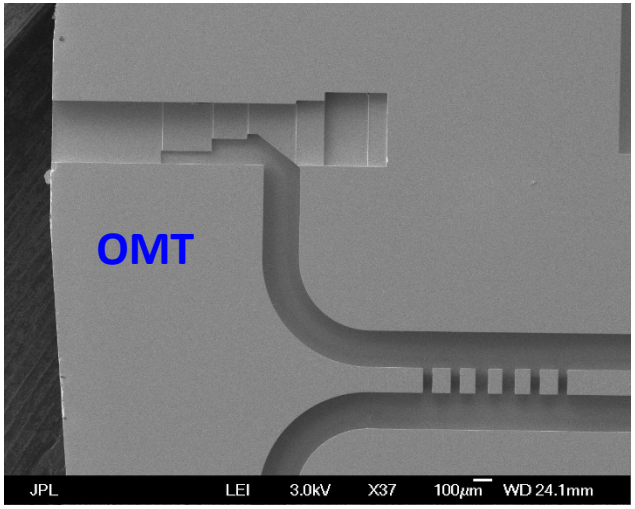

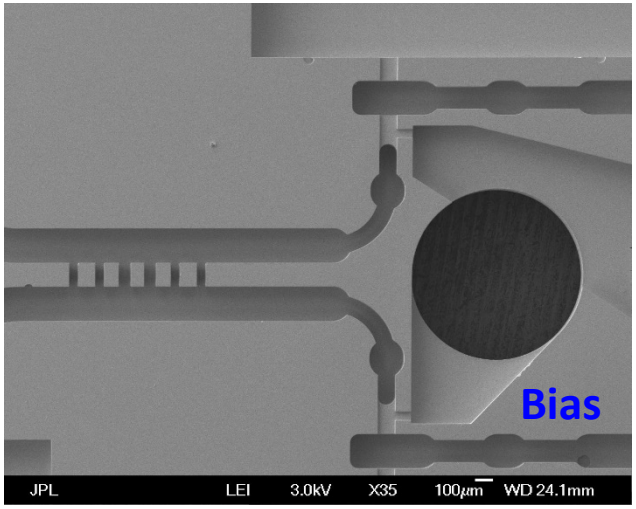

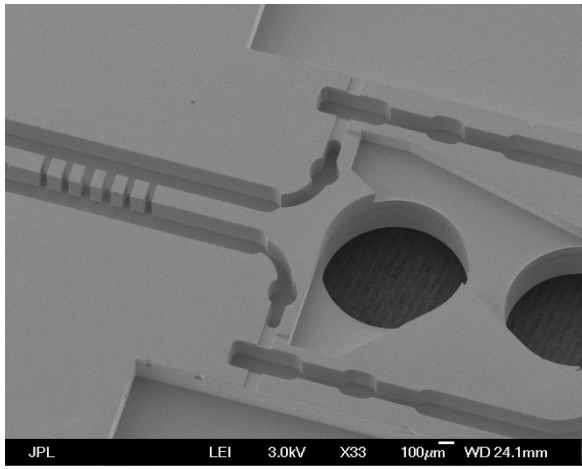

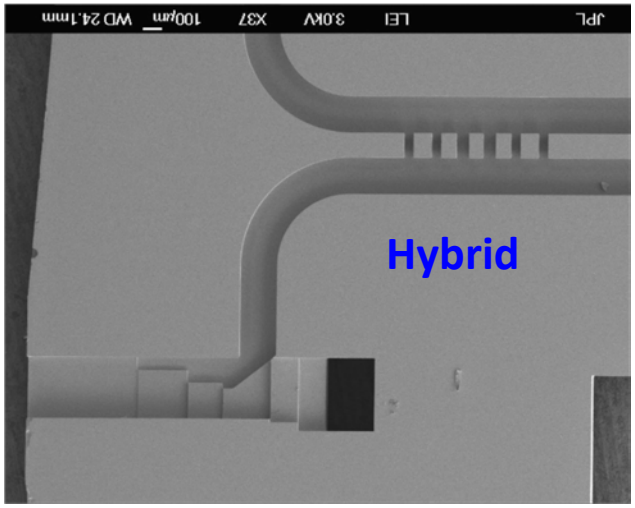

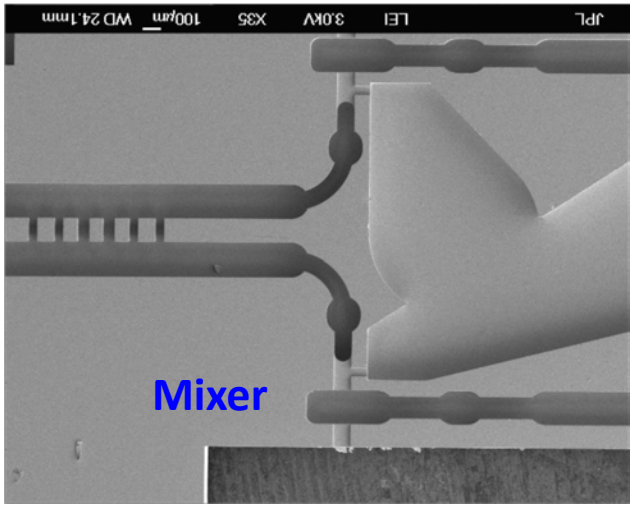

Different silicon micromachined layers before gold deposition.

Ref: C. Jung-Kubiak, et al., "A Multi-Step DRIE Process for Complex Terahertz Waveguide Components," *IEEE Transactions on Terahertz Science and Technology,* vol. 6, no. 5, pp. 690-695, September 2016.

Alignment of Silicon Micromachined Wafers

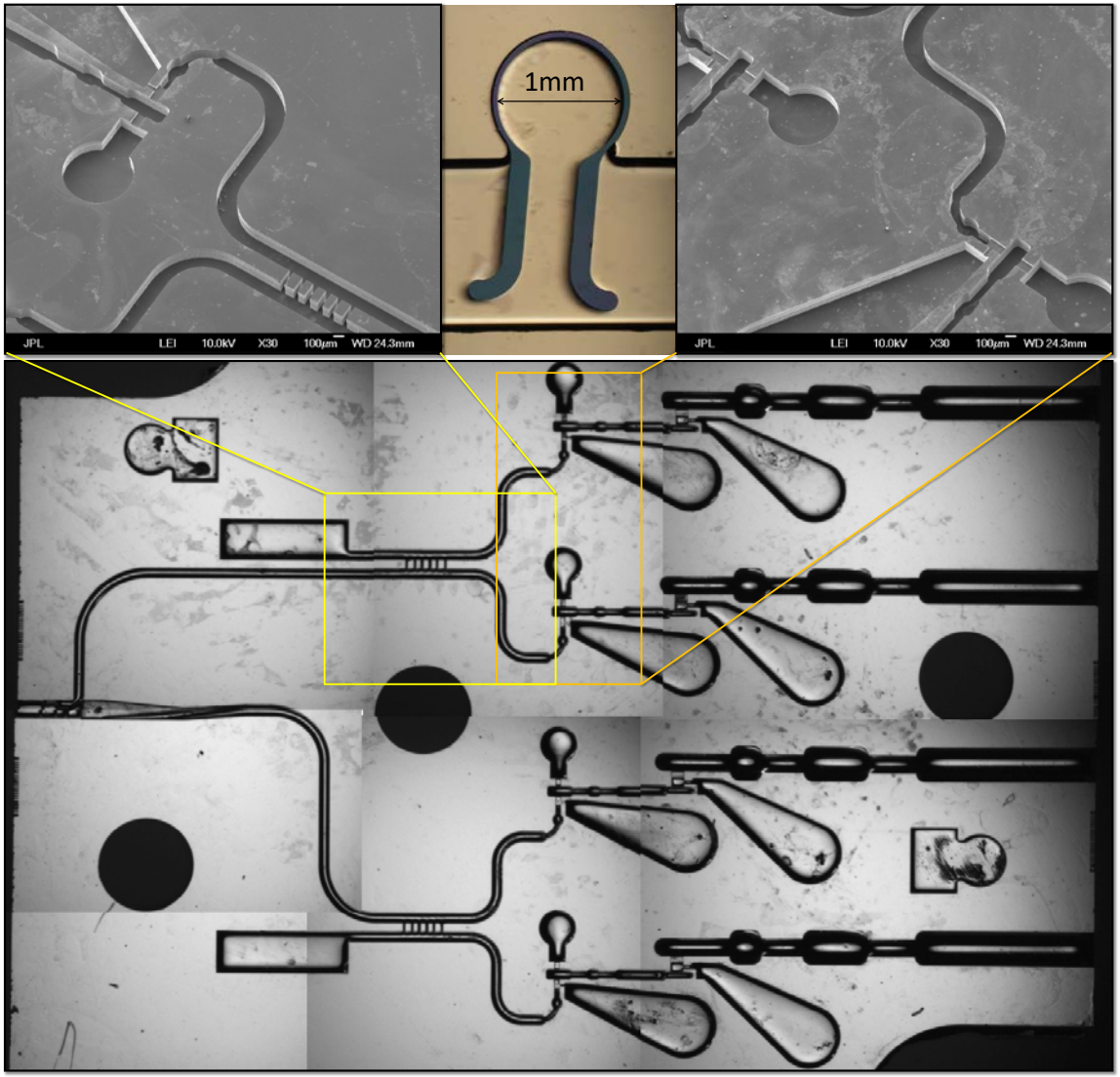

DRIE Based Silicon Micromachined Receiver

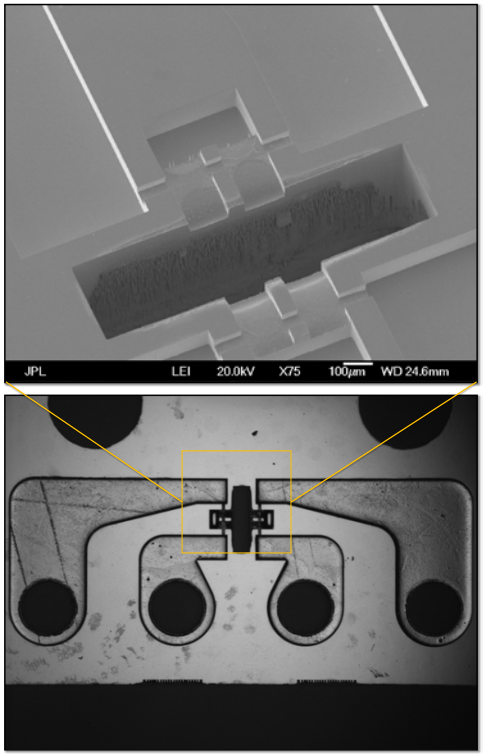

Silicon micromachined compressed pin for alignment of top and bottom wafers.

Ref: US Patent 9,512,863 B2 “Silicon Alignment Pins: An Easy Way To Realize A Wafer-To-Wafer Alignment,” issued Dec 6, 2016.

Alignment of Silicon Micromachined Wafers

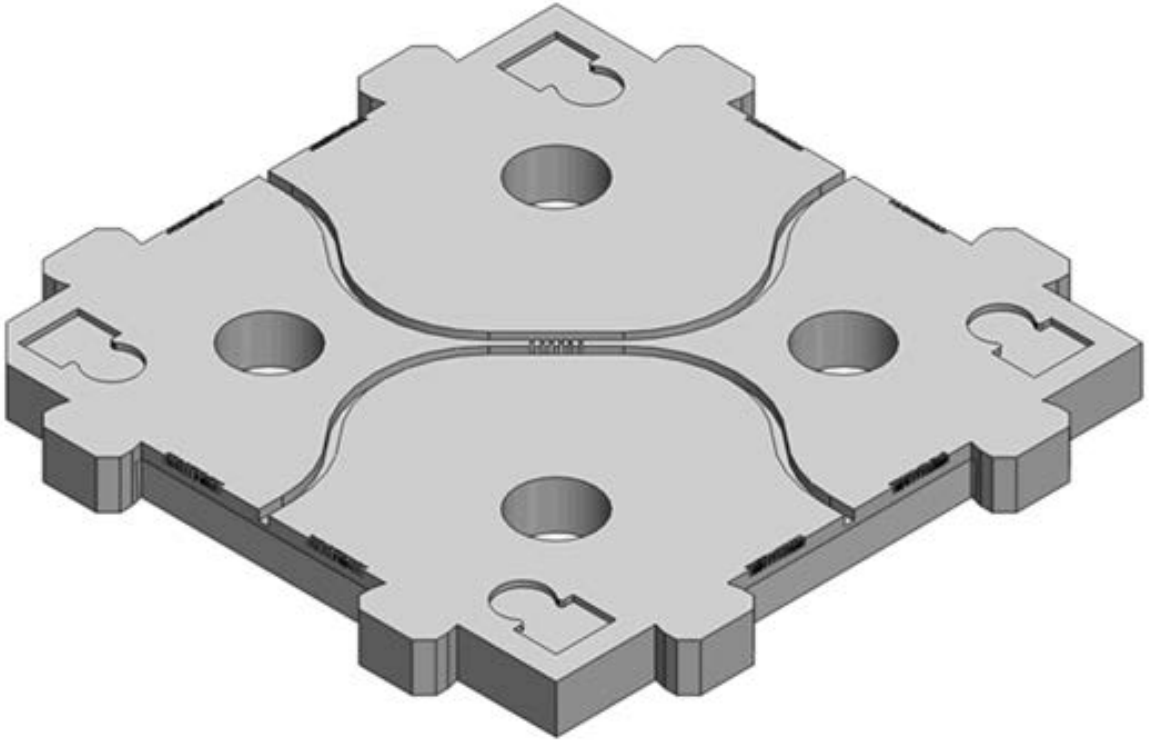

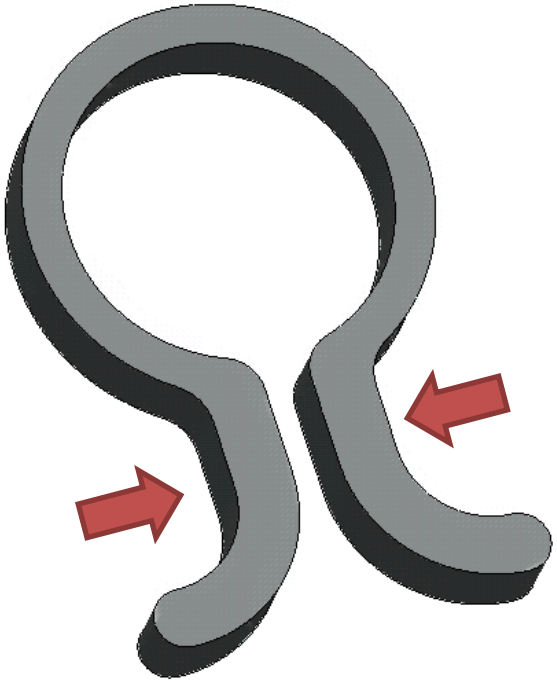

Alignment of Silicon Micromachined Wafers

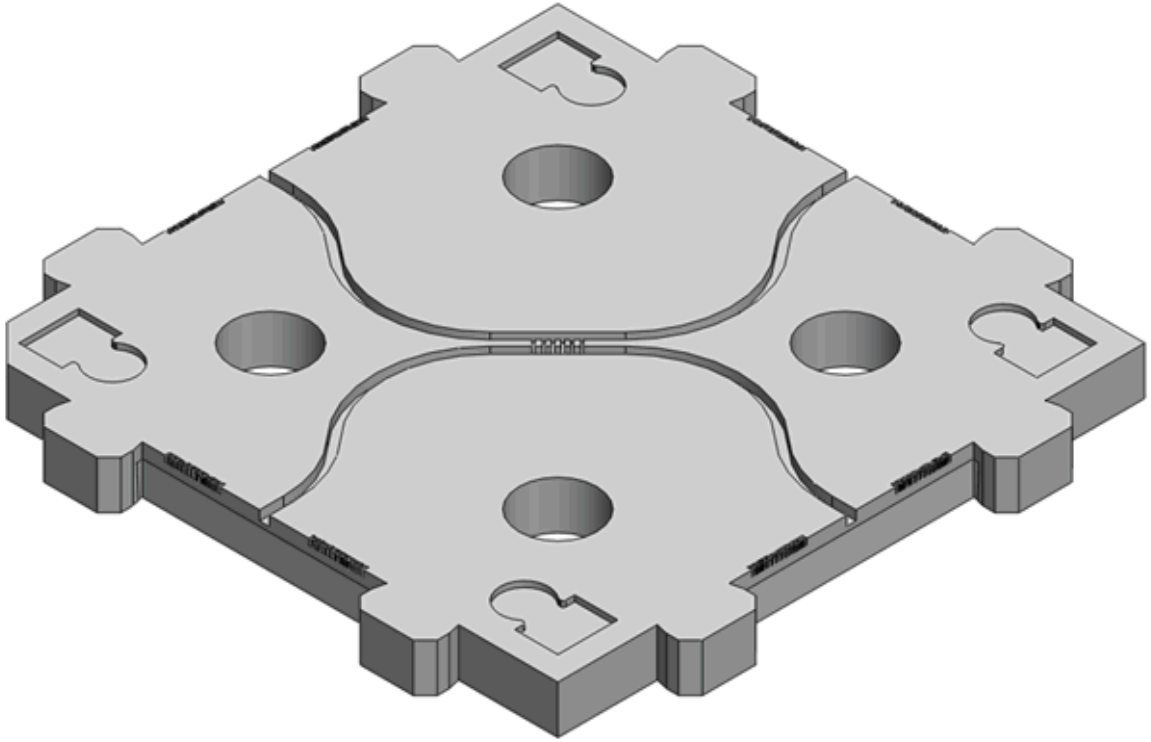

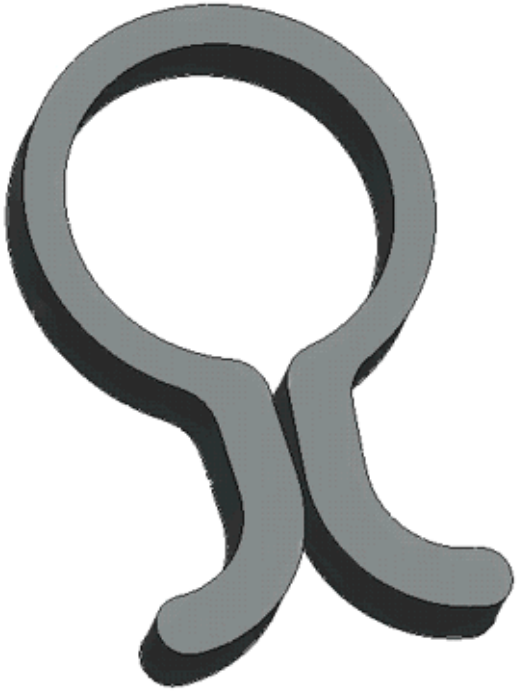

Alignment of Silicon Micromachined Wafers

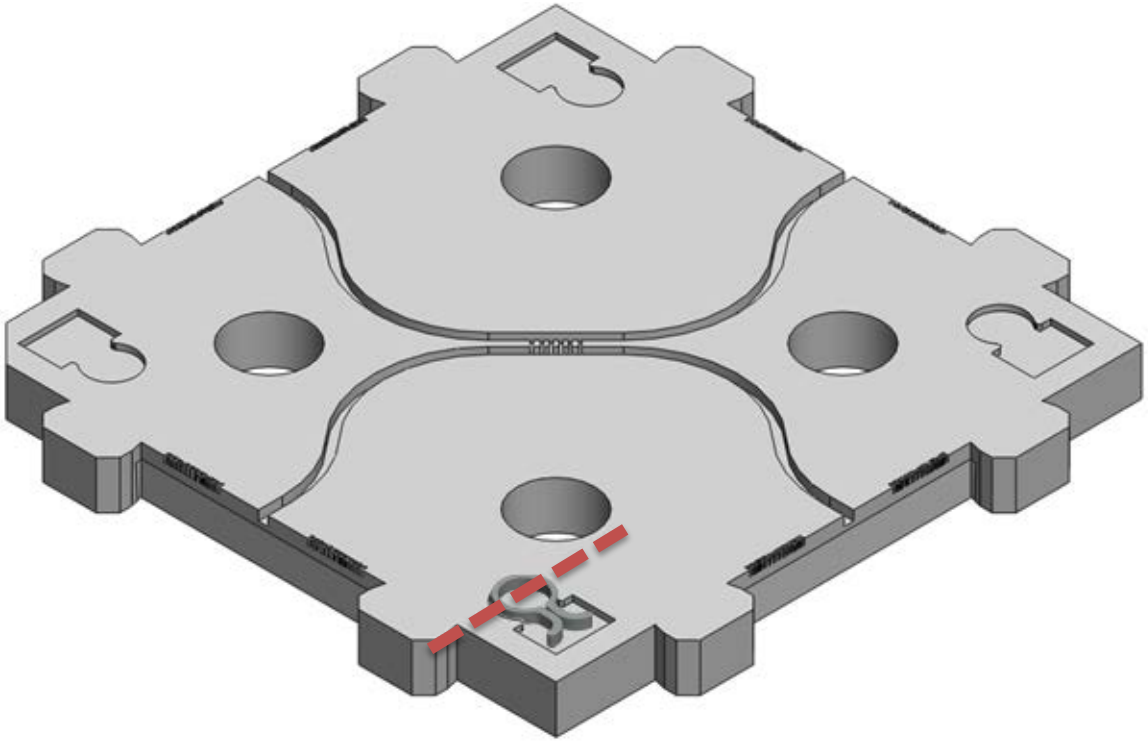

Alignment of Silicon Micromachined Wafers

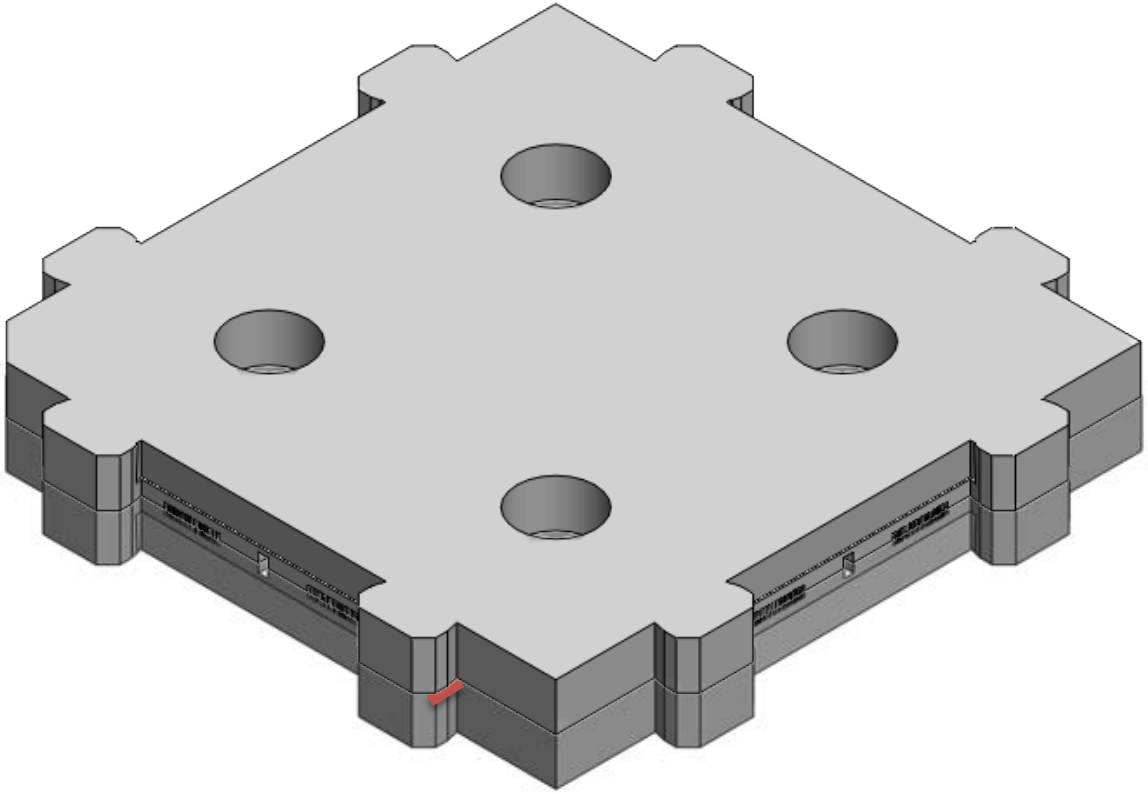

Alignment of Silicon Micromachined Wafers

- **How do we align individual silicon wafers?**

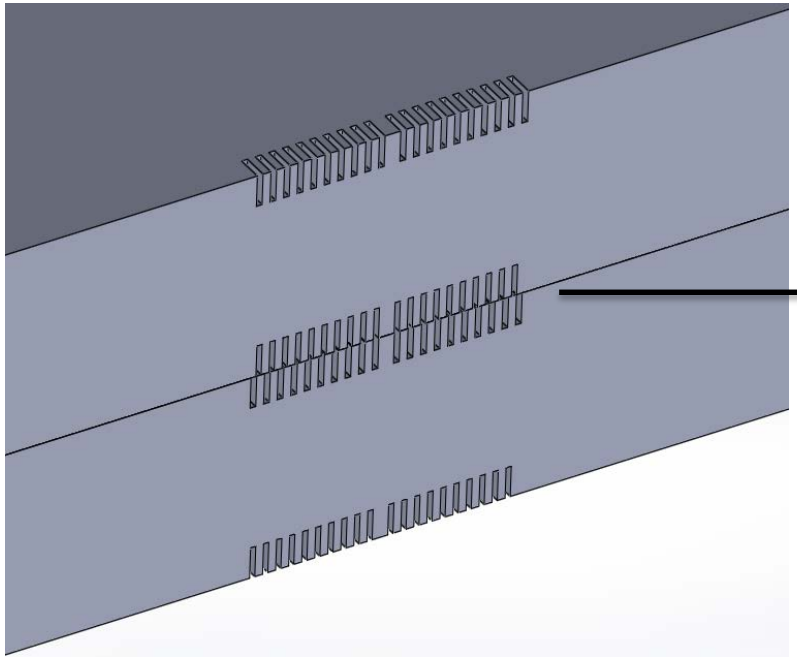

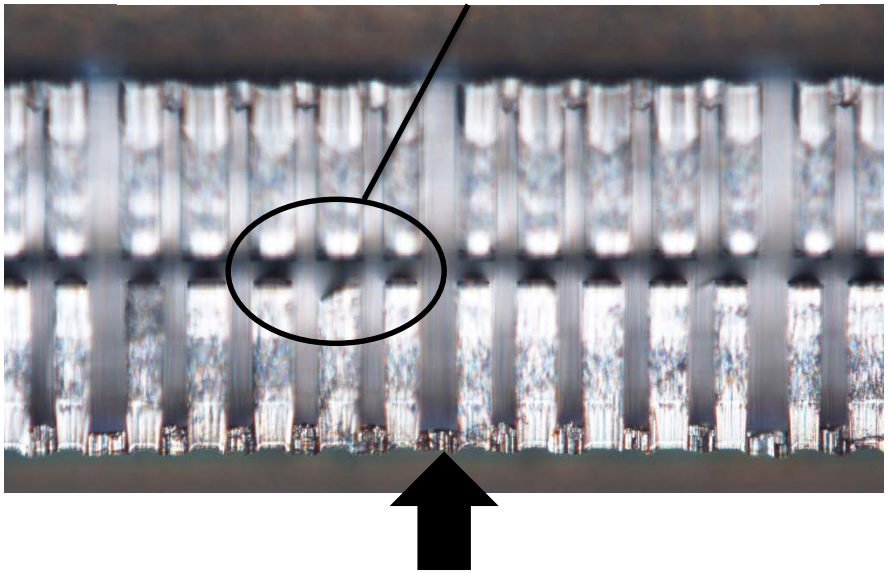

- **Enables characterization of alignment schemes**
- **Improves hand alignment**

Terahertz Antennas

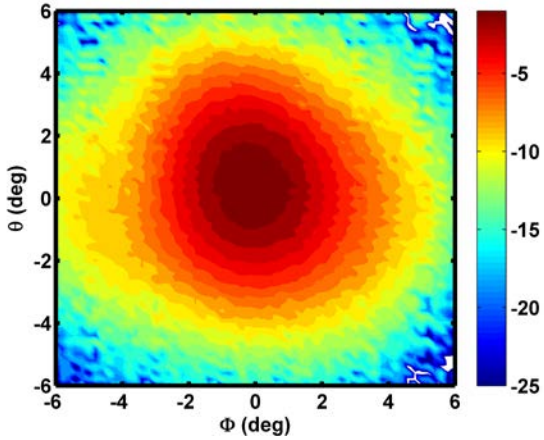

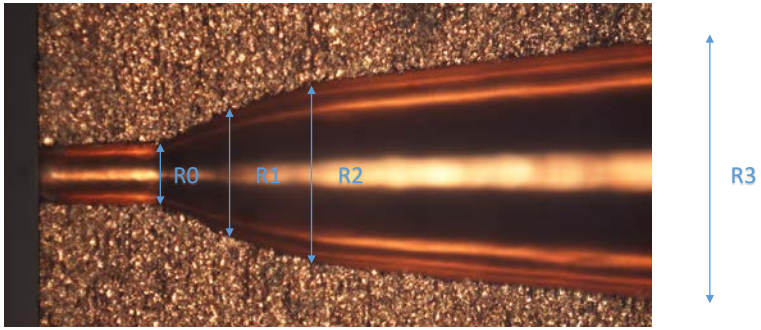

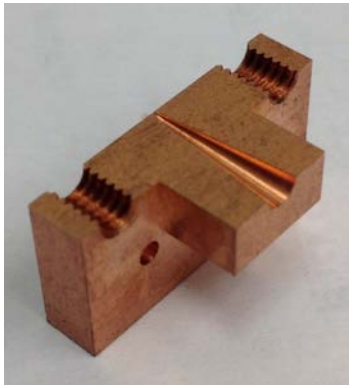

Parameters	Length
R0	0.074
R1	0.189
R2	0.261
R3	1.279
L1	0.237
L2	0.237
L3	8.976

Total length = 9.45mm.

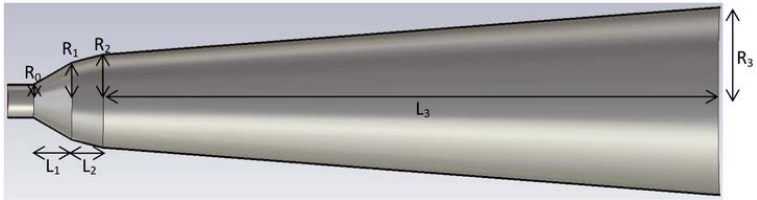

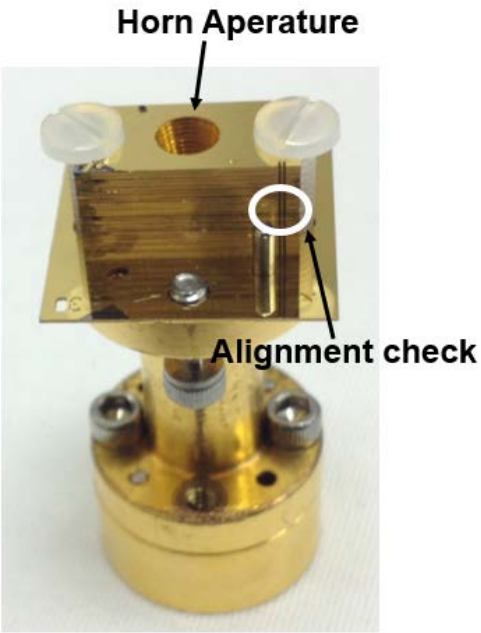

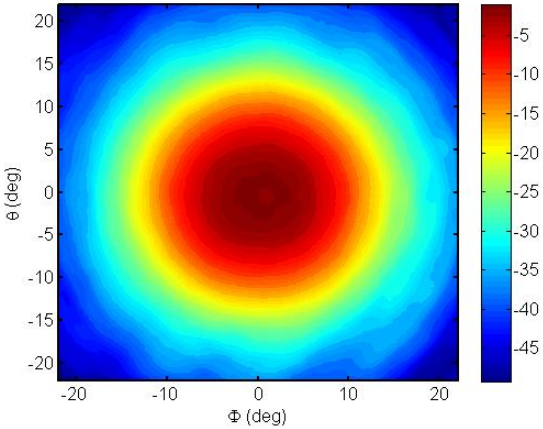

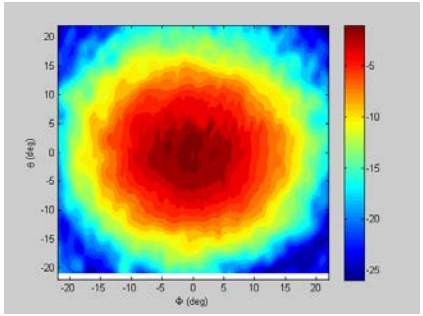

Challenges for Antennas

- Need planar low-profile antennas at terahertz frequencies to replace bulky reflector based antennas for planetary missions.
- The high-performance antennas need to be light-weight, low-profile, and has integrated feed structure.
- Novel metasurface (MTS) antennas could be a solution: it allows efficient on-surface control of the aperture field leading to low-level of cross-polarization and beam-shaping capabilities.
- Advantages of these antennas over deployable mesh reflectors and reflectarrays is that MTS antenna has the feed on the aperture plane, eliminating the complexity associated with feed deployment.

65nm CMOS Digital Spectrometer (2GS/S)

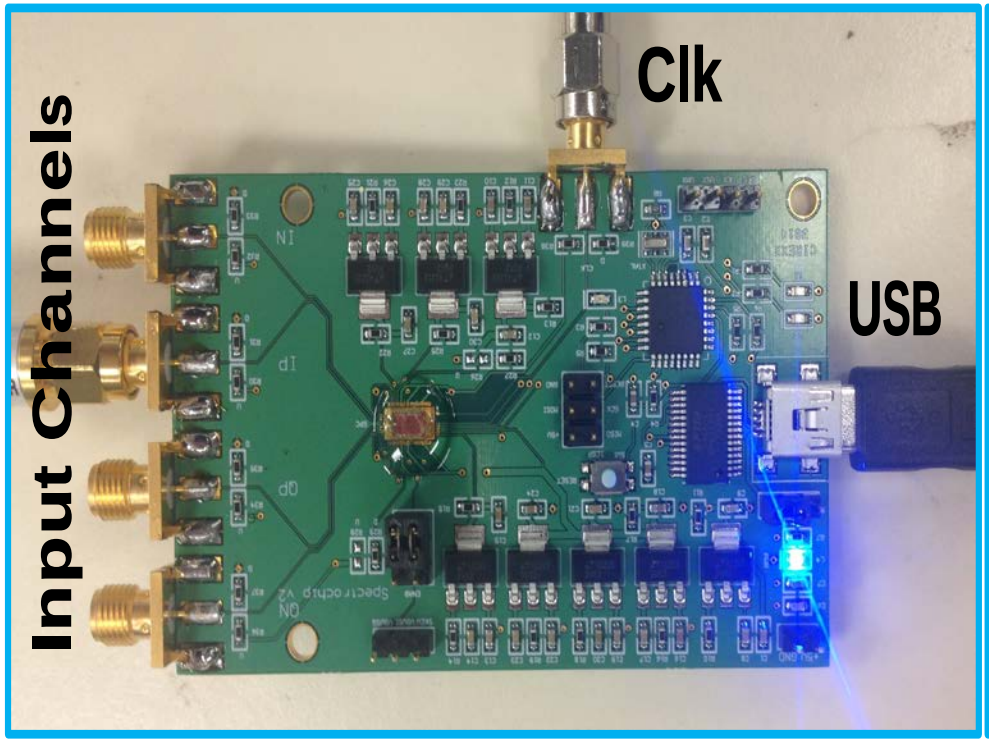

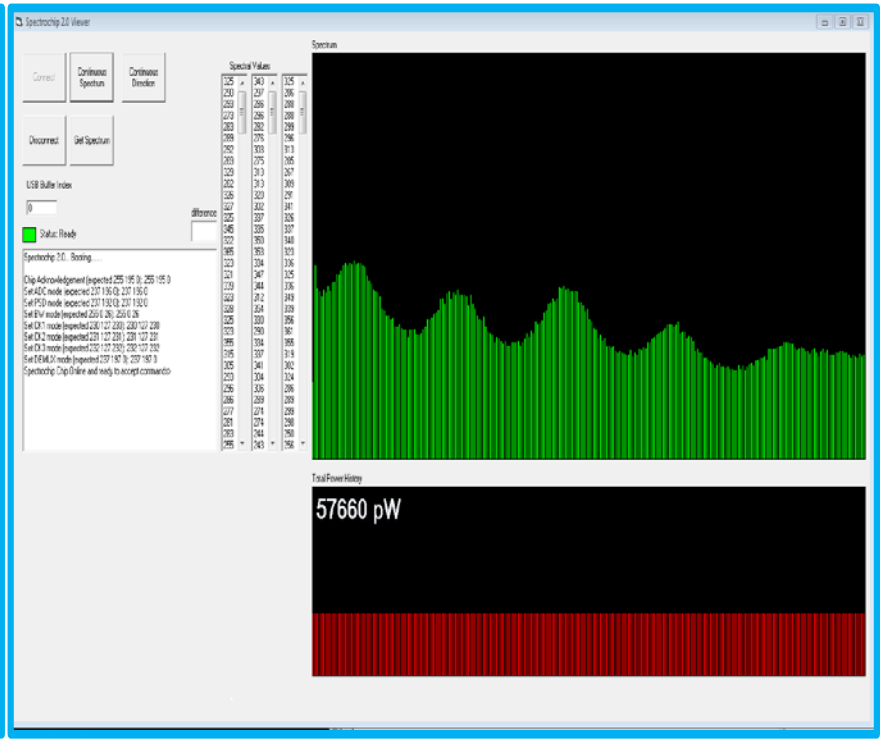

Photo of the spectrometer chip on a board (left) and a sample software interface showing white noise at the input of the spectrometer.

Spectrometer: Comparison with FPGA

Advanced CMOS SoC

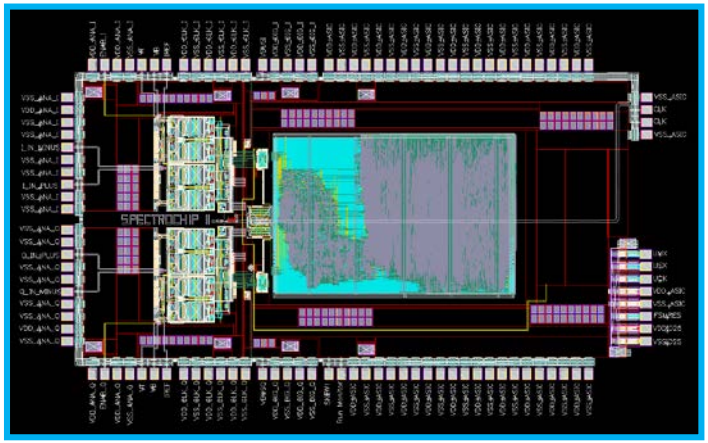

Feature	Current	Planned
Size	3.5 x 2.5 mm	3.5 x 2.5 mm
Weight	<0.1g	<0.1g
Power	<400 mW	<400 mW
Channels	512	8192
Bandwidth	1.0 GHz	5.0 GHz

Existing FPGA

Feature	Value
Size	25 x 25 x 5 cm
Weight	>1 Kg
Power	> 12 W
Channels	4096
Bandwidth	2-3 GHz

Gas Cell Testing

Setup Photograph (Front)

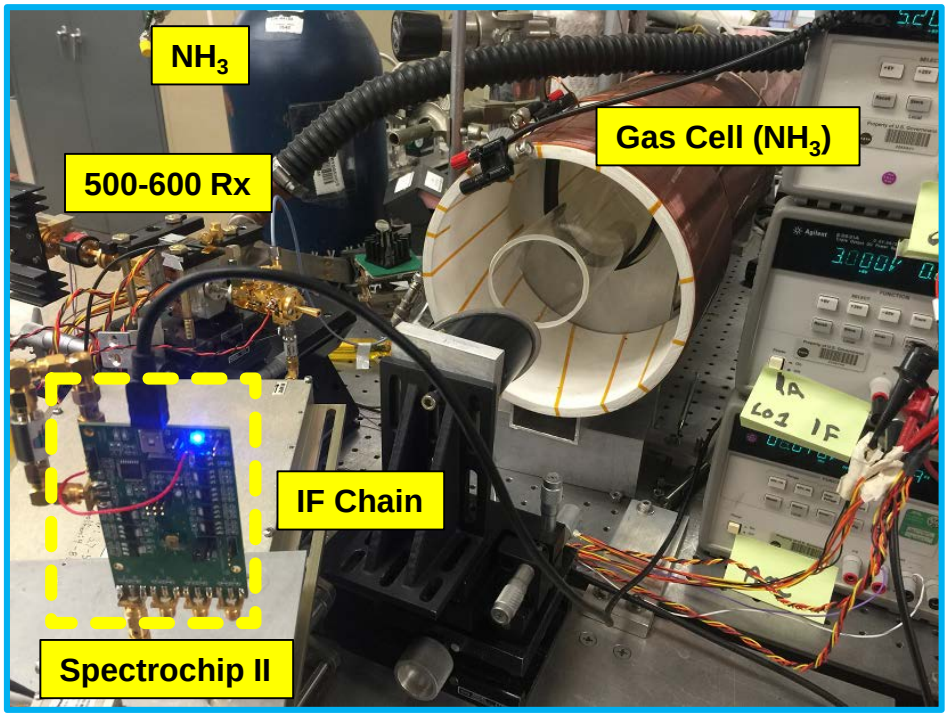

Setup Photograph (Back)

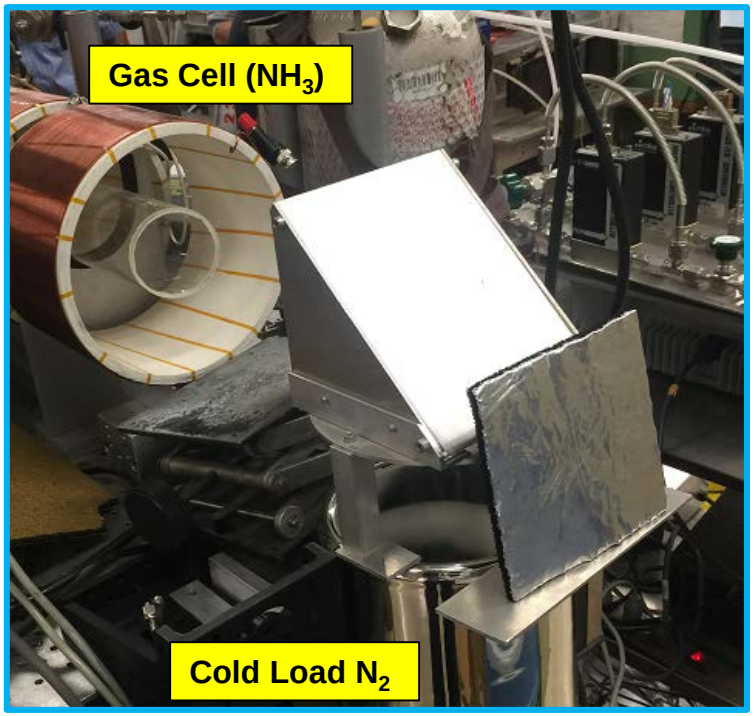

Ref: G. Chattopadhyay, et al., "Compact Terahertz Instruments for Planetary Missions," *Proc. 9th European Conference on Antennas and Propagation (EuCAP)*, Lisbon, Portugal, April 2015.

Gas Cell Testing Results

NH_3 Spectrum (averaged over 3 sets)

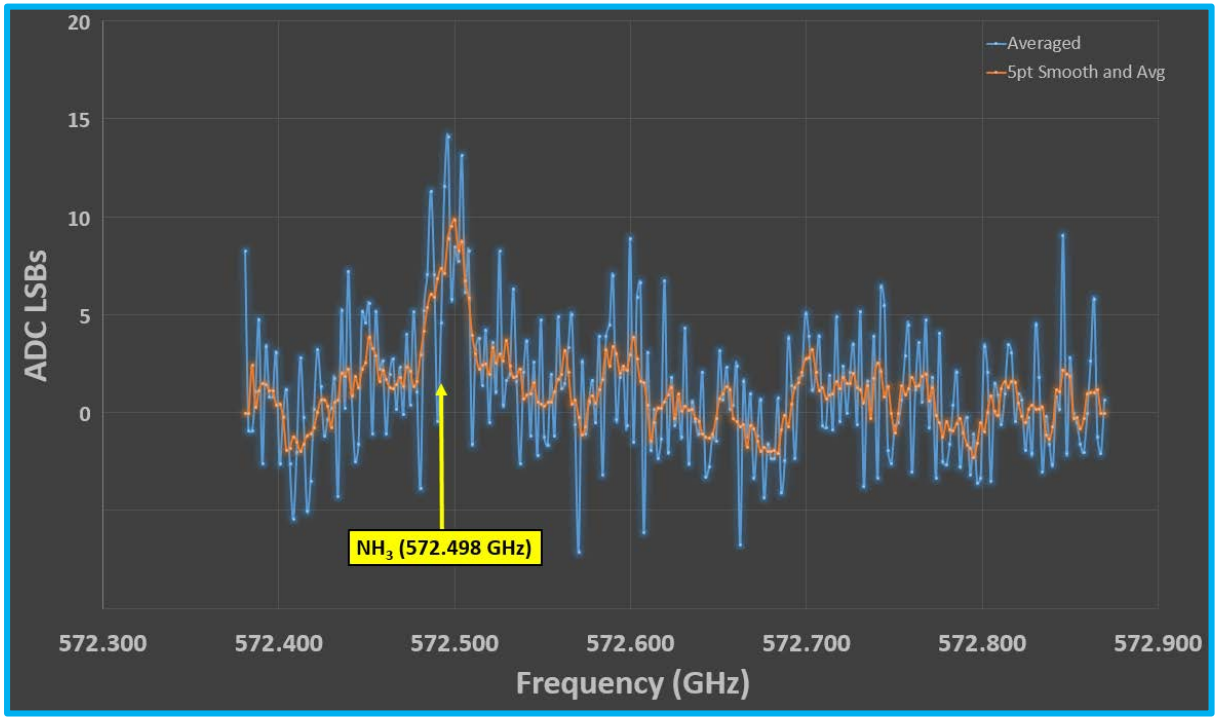

Spectral Results

Metric	Performance
Expected Bin	193
Peak Bin	193
SNR (Linear)	9.86 / 2.65 = 3.7

Integration Settings

-1024X On-Chip Averages
-20X Software Averages
-3X Data sets

Ref: G. Chattopadhyay, et al., "Compact Terahertz Instruments for Planetary Missions," *Proc. 9th European Conference on Antennas and Propagation (EuCAP)*, Lisbon, Portugal, April 2015.

Summary

- Current generation heterodyne spectrometers and radiometers at terahertz frequencies for planetary exploration requires too much power (more than 50 W) and weighs too much (more than 25 kg).
- Planetary instruments with silicon micromachined front-end and CMOS based synthesizers and spectrometers will address some of these issues.
- We are developing a dual-polarized and sideband separating spectroscopic instrument with excellent performance weighing less than 10 kg and drawing less than 20 W of power.