Jet Propulsion Laboratory
California Institute of Technology

HabEx Mission Concept Flight System Overview

for STDT meeting #5

Gary M Kuan

Thursday, August 3, 2017

Pre-Decisional Information -- For Planning and Discussion Purposes Only

© 2017 California Institute of Technology. Government sponsorship acknowledged.

Telescope Baseline Flight System Overview

For Interim Report

- The information presented here represents a preliminary look at the flight system as it may appear in the interim report.
- Architecture and/or design details may change before release of the Interim Report (Dec 2017)
- These slides will be presented to the HabEx Science and Technology Development Team (STDT) as part of STDT meeting #5 (August 2-4, 2017)
- Content developed by HabEx Design Team and JPL Team-X

HabEx Mission Concept Architecture

4m Baseline

- Earth-Sun L2 Halo orbit
- 4-meter diameter, unobscured telescope
  - 4-meter diameter, f/2.5 monolithic primary mirror
- Formation Flying 72-meter diameter Starshade
- Instruments (4):
  - Coronagraph Instrument (imager and spectrograph)
    - Hybrid Lyot Coronagraph
    - Vector Vortex Coronagraph
    - Can switch between the two using filter wheels
    - Two coronagraph paths covering different wavelengths
  - Starshade Instrument (imager and spectrograph)
  - General Astrophysics Workhorse Camera (imager and spectrograph)
  - General Astrophysics UV Spectrograph

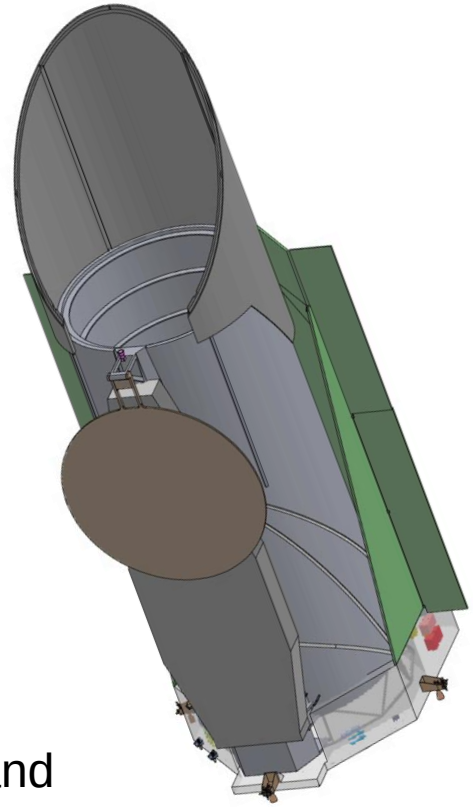

HabEx Launch Vehicle & Stowed Configuration

Co-launch in a single SLS

- Launch vehicle:
  - SLS Block 1B
  - 8.4m diameter fairing
  - 27.4m tall fairing
  - Capable of carrying 40 mT to Earth-Sun L2
- Co-launch of Telescope with Starshade
- Telescope will require a deployable scarf
- Starshade includes an unfurling mechanism
- Telescope launch adaptor relieves Starshade of carrying Telescope mass

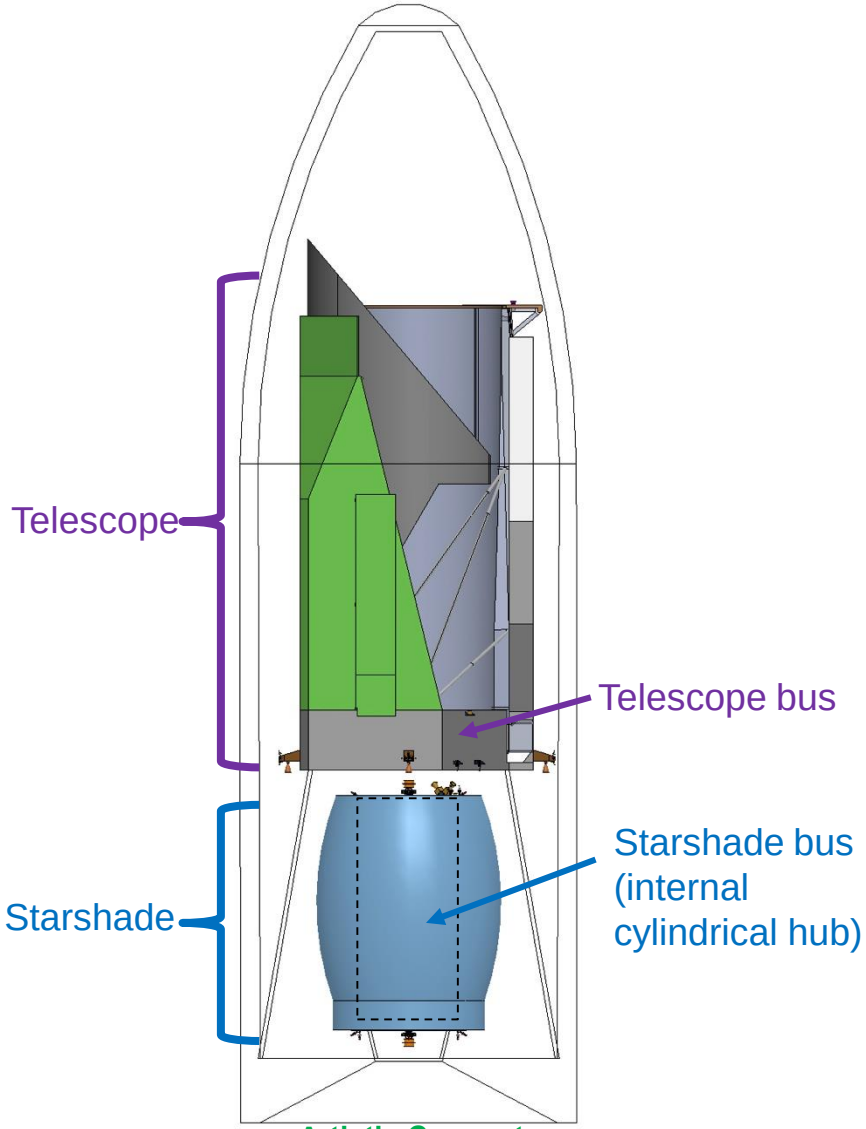

Artist's Concept

HabEx Telescope, Stowed, Instrument Side

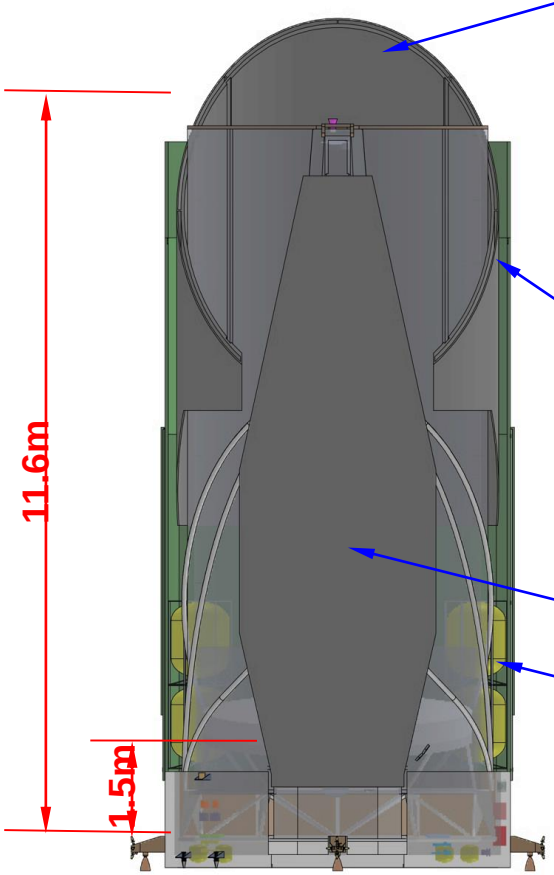

Scarf stowed (double layer solar shielded)

Actuated baffle tube cover

Baffle tube bulkhead (shown partially transparent for clarity)

Internal baffles

Solar panel tower (also functions as fixed solar shade)

Deployable solar shade extensions (stowed)

Instrument box

Propellant tanks behind

Primary Mirror on support truss (internal)

Spacecraft (shown partially transparent for clarity)

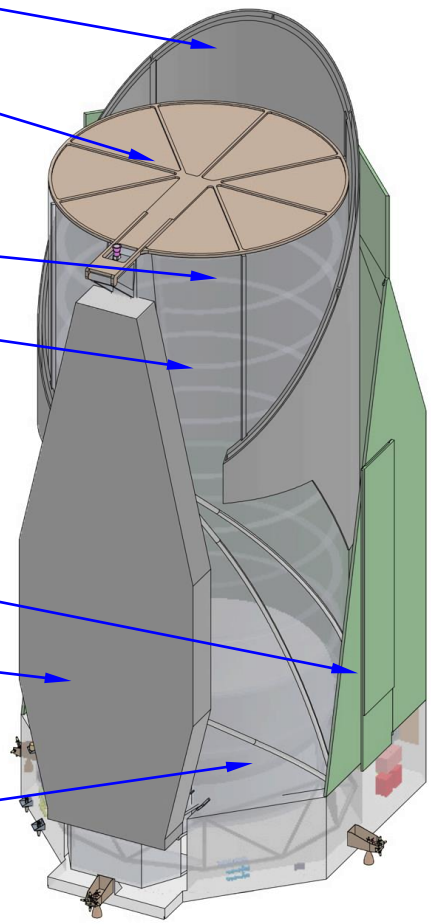

HabEx Telescope, Stowed, Solar Array Side

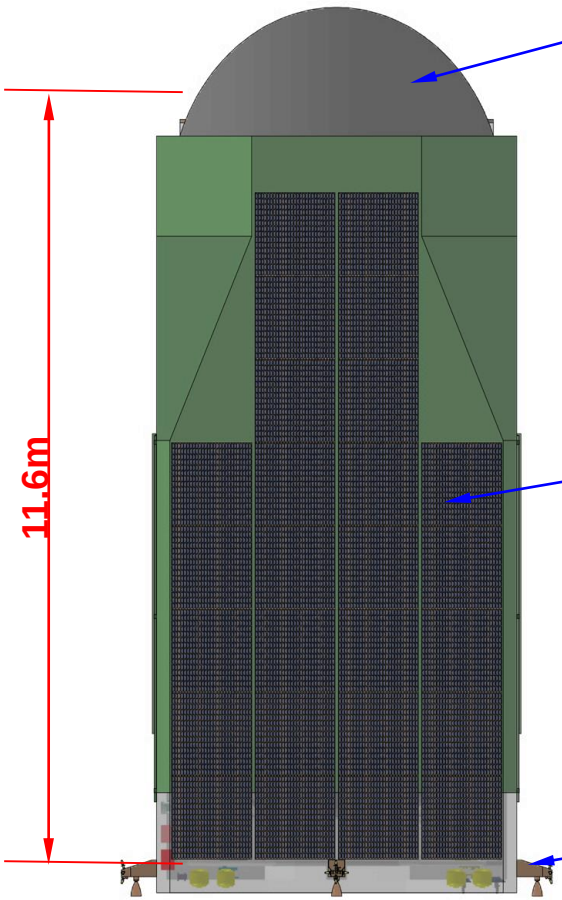

Scarf stowed (double layer solar shielded)

Actuated baffle tube cover

Baffle tube bulkhead (shown partially transparent for clarity)

Internal baffles

39m^2 solar array

Deployable solar shade extensions (stowed)

Primary Mirror support truss (internal)

Spacecraft (shown partially transparent for clarity)

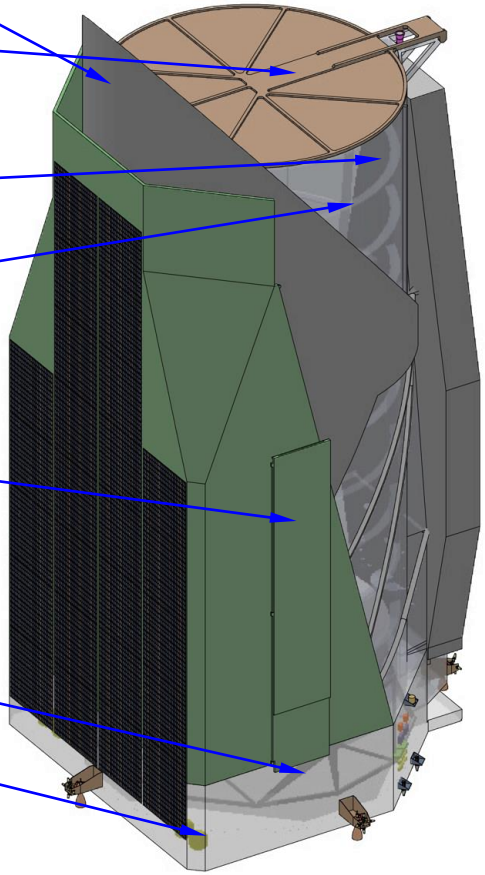

HabEx Telescope, Deployed

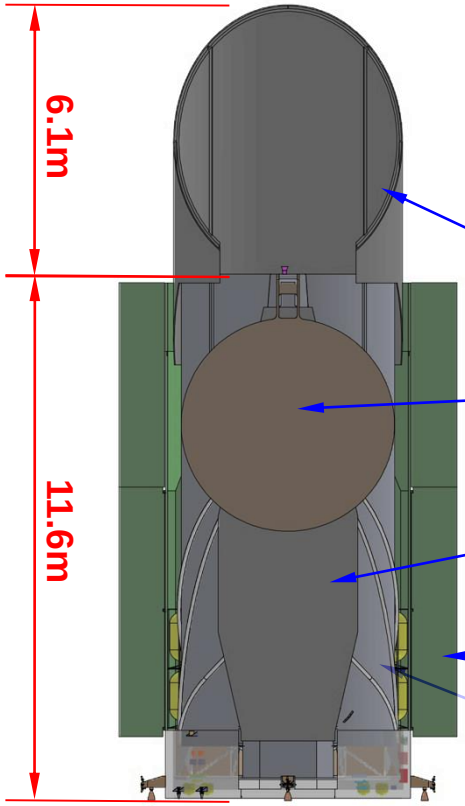

Scarf deployed

Baffle tube cover deployed

Instrument box

Solar shade extenders deployed

Baffle tube bulkhead

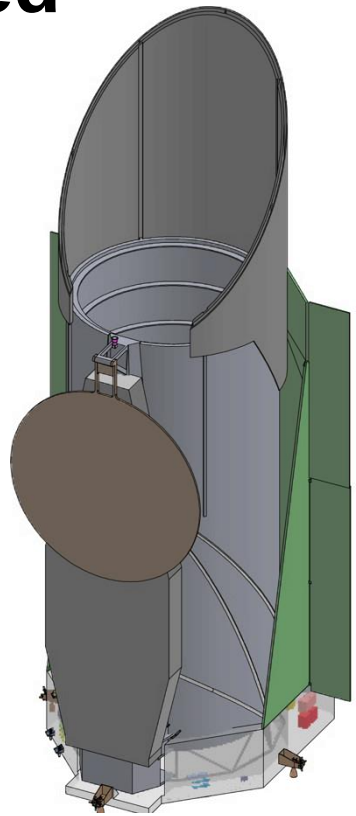

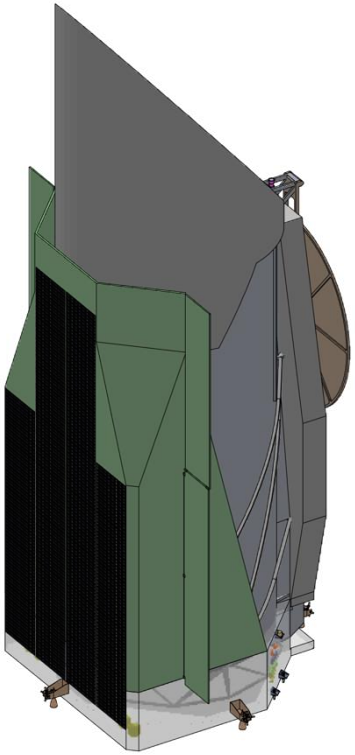

Telescope Bus

Telescope Propulsion

- Thrusters (chemical & electric):
  - Perform TCM1, TCM2, halo insertion, station-keeping, and disposal
  - Also will perform ACS coarse pointing for slewing and target acquisition, and fine pointing
  - Provide three-axis control
  - Full redundancy
  - 10 years of service (5 years baseline + additional 5 years)
  - In-flight refueling option with resupply interface valve
- Hardware – hydrazine monopropellant propulsion
  - Four Aerojet/Rocketdyne MR-104J, 445N main engines
  - Four Aerojet/Rocketdyne MR-106L, 22N thruster vector control engines
  - Sixteen Aerojet/Rocketdyne MR-111C, 4.45N attitude control engines
  - Four propellant tanks
- Hardware – colloidal microspray engines
  - Ten Busek BET-100, 100μN microthrusters
  - Four (small) propellant tanks
  - Microthrusters are life-limited with integrated tanks
  - Additional thruster clusters added to extend service life to 20 years

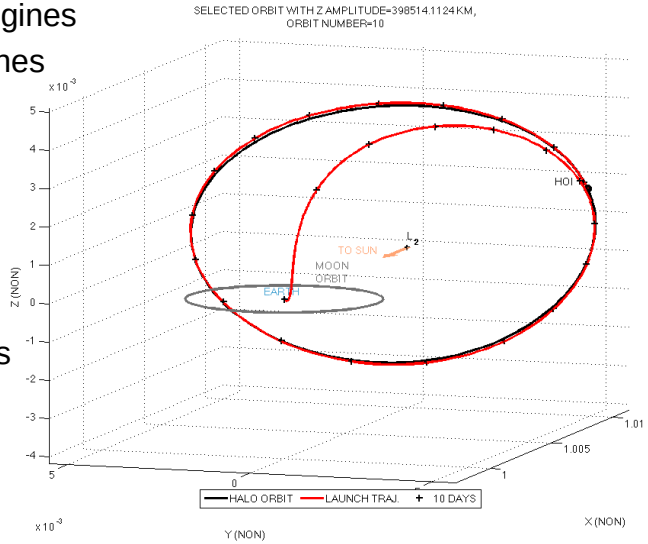

Telescope Attitude Determination and Control Subsystem (ADCS/ACS)

- Thrusters will be used for target acquisition and fine pointing, in lieu of reaction wheels
  - 4.45N hydrazine thrusters for slew & target acquisition
  - 100μN microspray thrusters for fine pointing
    - Produce significantly less high frequency disturbances during observations (than reaction wheels)
    - No need to periodically dump momentum (w/ reaction wheels)
- Sodern-Hydra Star-tracker (TBR) with 4-heads for coarse pointing
  - ±6 asec (3σ) Line-of-Sight Control
  - ±3 asec (3σ) LOS knowledge requirement (±1asec capability)
- Fine pointing control requires fine guiding system within instruments:
  - ±2.5 milli-asec LOS stability for science observations
  - ±0.7 milli-asec LOS stability for coronagraph

Telescope Thermal Control

- Thermal Control Design follows standard JPL state-of-practice by cold-biasing the flight system and adding heat back into the system to maintain temperatures.
  - Lots of Multi-Layer Insulation (MLI) is used to meter heat loss and to isolate from thermal disturbances (i.e. the Sun)
  - To maintain precision thermal control requires hundreds of heater control zones
- Components:
  - Precision heater controllers (PID)
  - Bang-bang heater controllers (where precision not required)
  - Heaters, platinum resistance thermometers (PRTs), thermostats
  - MLI, radiators, constant conductance heat pipes
- Temperatures:
  - Telescope outer barrel controlled to 230K
  - Telescope optics controlled to 270K
  - Telescope Thermal Performance requirements
    - 50mK stability during an observation
    - <50mK change in spatial gradient

Telescope Baseline Power System

- General Requirements:
  - Dual string – cold “spared”
  - “small cell” technology Li-ion battery
  - Worst case sun off point angle of 40º
  - Power subsystem lifetime 20 years
    - (non-serviceable solar array)
  - Batteries may be serviceable (TBD)
- Solar Array:
  - GaAs TJ Rigid 29.5% efficient cells
  - Fixed rectangular array mounted on sun side of telescope barrel (opposite of SM tower & instrument bay)
  - Sized for 6.4kW Secondary Science power mode
  - Total required array: 39 m^2 (33 m^2 active cell area)
  - Nominal cell operating temp at EOL: 95ºC
- Batteries:
  - (2) 66 Ah batteries, 69% max depth of discharge
  - Dual string reference bus power electronics architecture

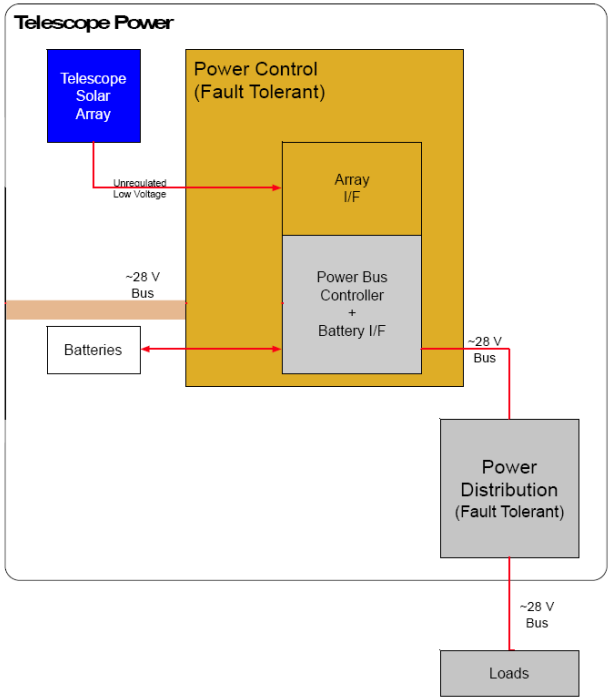

Telescope Telecommunication

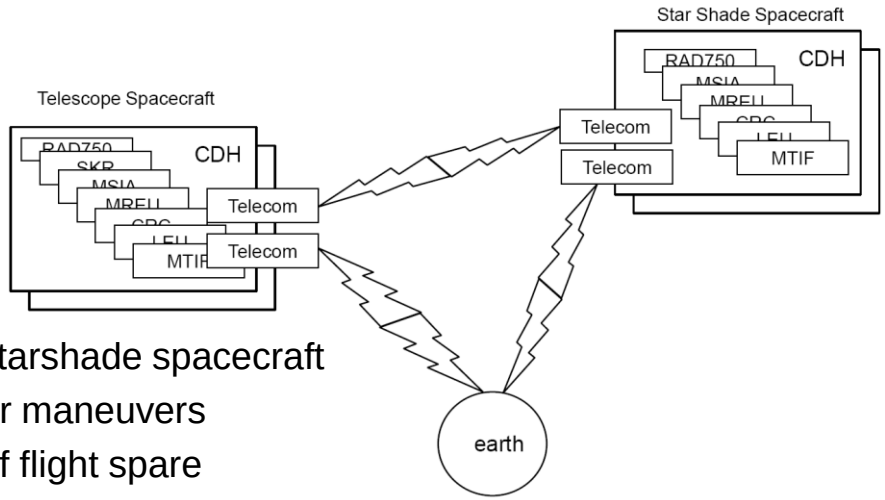

- Data Volumes
  - Science data downlink ~1 Tbit/wk, Ka-Band
- Interfaces
  - Standard ATC components (thrusters)
  - Standard Instrument interfaces
  - Telecomm interface between Telescope & Starshade spacecraft
  - Starshade spacecraft uses ion propulsion for maneuvers
  - Two strings of flight hardware/single string of flight spare
- JPL Reference Bus based system hardware:
  - RAD750 CPU, MTIF, MSIA, CRC, LEU-A, LEU-D
  - SKR memory card, 192Gbytes (on telescope)
  - Add. 1Tbit of storage on telescope allows for weekly downlink (one DSN pass) of sci data
  - One additional memory card on Telescope S/C
  - High speed serial (ICC/ITC LVDS/RS422)
  - 1553B
  - UART + discrete inputs/outputs
- Spacecraft to spacecraft communication via Electra radio
  - 100bps via S-band
  - LVDS interface to MSIA to talk to Electra radio

Starshade Bus

Starshade Configuration

- 72m diameter Starshade deploys radially from Hub exterior
- PLUS (Petal Launch Restraing & Unfurler Subsystem)
  - deploys the Starshade occulter (jettisoned after use)
- Starshade Bus fits within the Starshade Hub
- Bus Includes:
  - Solar Electric Propulsion (SEP) Hall effect thrusters
  - Bi-prop chemical thrusters
  - Communications, with ground & telescope
  - Formation Flying beacon
  - Electronics
  - Solar Array (2 sets)
    - 1 rigid array on end of hub
    - 1 flexible CIGS array starshade disc when deployed
  - Thermal Control
- Starshade is spin-stabilized at 0.33 RPM
  - allows starshade occulter temperature to be passively controlled
- Communications same as telescope (w/o extra 1Tb storage)

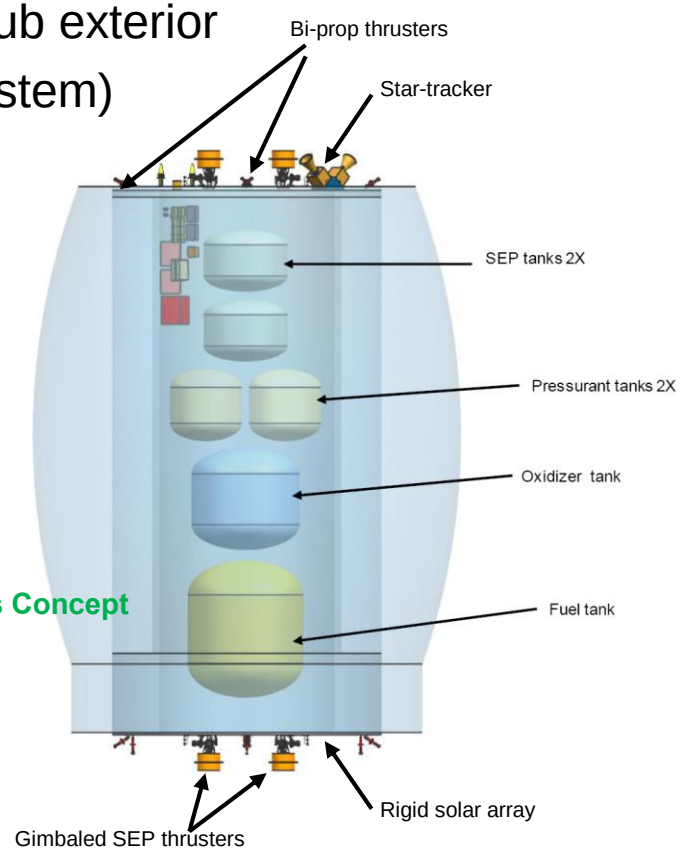

Artist's Concept

Starshade Propulsion

- Thrusters (chemical and electric):
  - Perform TCM1, TCM2, halo insertion, station-keeping, retargeting, ACS, and disposal
  - Bi-propellant thrusters provide ACS three-axis & spin control
  - Solar Electric Propulsion (SEP) Hall effect thrusters used to perform large maneuvers to retarget the starshade with respect to the telescope for science operation
  - Full redundancy
  - 5 years of service (propellant for 10 years of attitude control w/o re-positioning)
  - In-flight refueling option with resupply interface valve
- Hardware (bi-propellant propulsion system):
  - Twelve MOOG DST-11H, 5lbf engines (Attitude Control & Main Engines)
  - One propellant tank, 34.8kg for oxidizer
  - One propellant tank, 41.3kg for fuel
  - Two pressurant tanks, 39.46kg/each, for fuel and oxidizer pressurant
- Hardware (electric propulsion):
  - Four ARRM Hall Effect EP engines, 0.52N thrust, Isp 3000 seconds
  - Two propellant tanks, 22kg/each for xenon
  - Flexible CIGS solar array on deployed occulter disc (provides power to SEP and during ops)
  - Rigid solar array mounted on top of cylindrical bus (for pre-deployment & during ops)

Starshade Attitude Control Subsystem (ACS)

- Starshade to be spin stabilized for more uniform passively controlled temperature profile across Starshade occulter
- Pointing:
  - Control spin axis to within 1º (3σ zero-to-peak)
  - Knowledge for the spin axis to within 0.25º (3σ zero-to-peak)
  - Spin speed within ±0.05º/sec (3σ) relative to the target rate
  - Must be within ±1m (3σ) of the telescope plane-of-sky
  - Distance variation from telescope must be ±250km
  - Laser beacon for starshade attitude and distance measurements (by telescope)
- Slewing:
  - Re-targeting involves SEP to re-position and thrusters to re-orient the starshade
- Operations:
  - Starshade will be within 44º to 83º of the sun
- Hardware:
  - Redundant star trackers (to be selected with respect to spin rate)
  - 2 sets of 2-channel electronic control units (ECUs)

Jet Propulsion Laboratory
California Institute of Technology

jpl.nasa.gov