Jet Propulsion Laboratory
California Institute of Technology

4-Pixel Heterodyne Receiver at 1.9 THz using a CMOS Spectrometer

Jenna Kloosterman[1], Jonathan Kawamura[1], Adrian Tang[1], Jose Siles[1], Fahouzi Boussaha[2], Bruce Bumble[1], Choonsup Lee[1], Alejandro Peralta[1], Robert Lin[1], Imran Mehdi[1]

[1]Jet Propulsion Laboratory, California Institute of Technology Pasadena, CA 91109, USA

[2]Observatoire de Paris, 75014 Paris, France

Lifecycle of the ISM

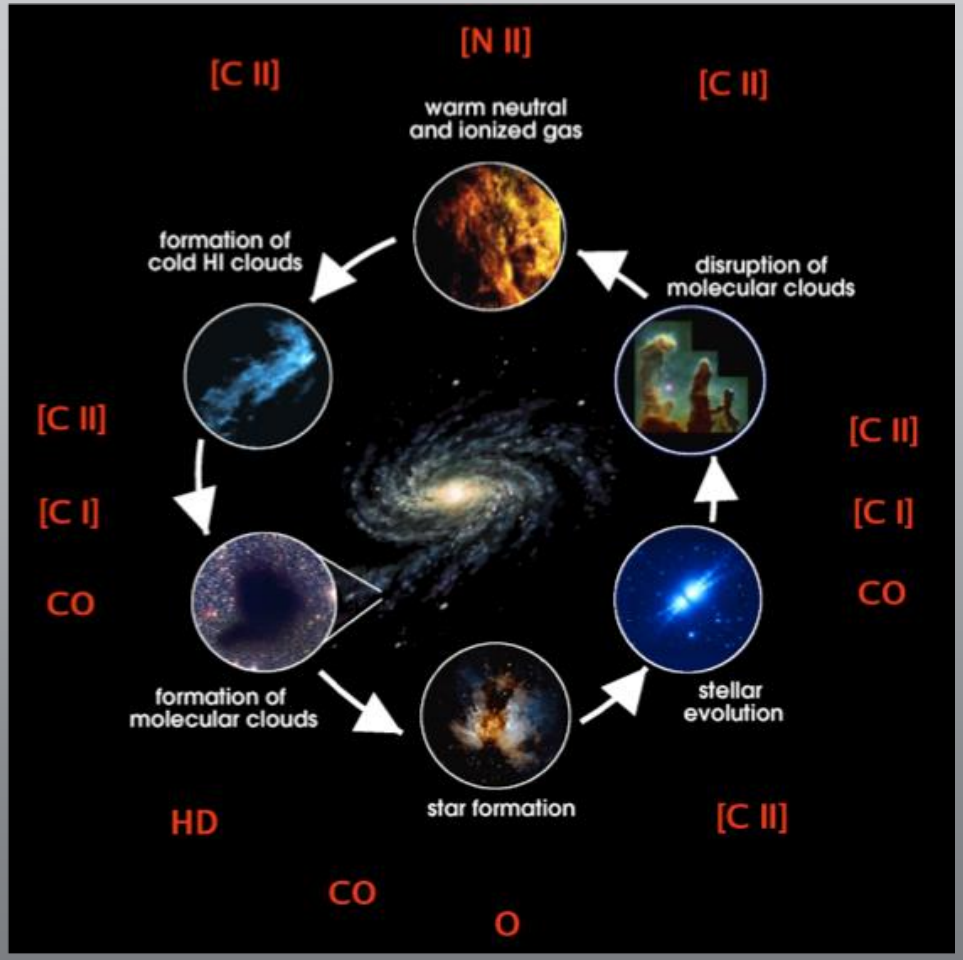

Large spectroscopic THz arrays are needed for surveys that can disentangle the motions of giant molecular clouds (GMCs) in the ISM.

CO Survey Instrument: SuperCam

APEX

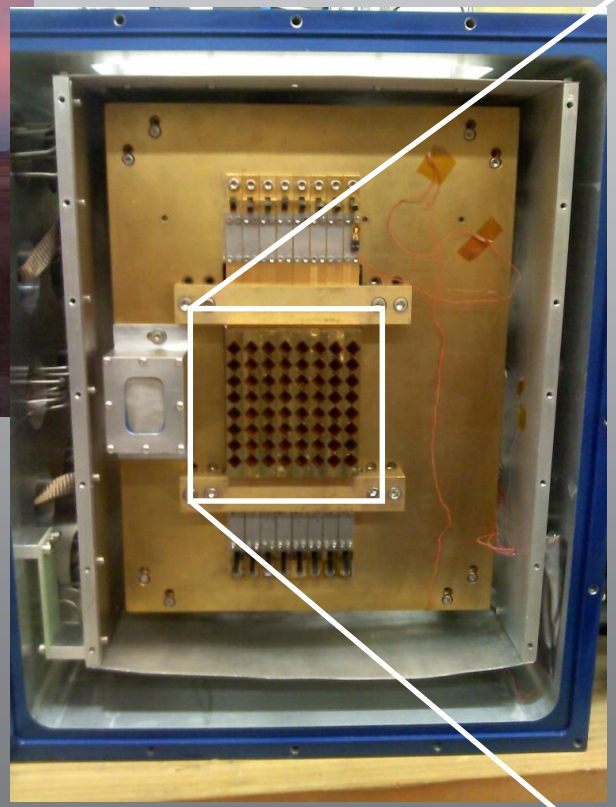

Courtesy of T. Stanke

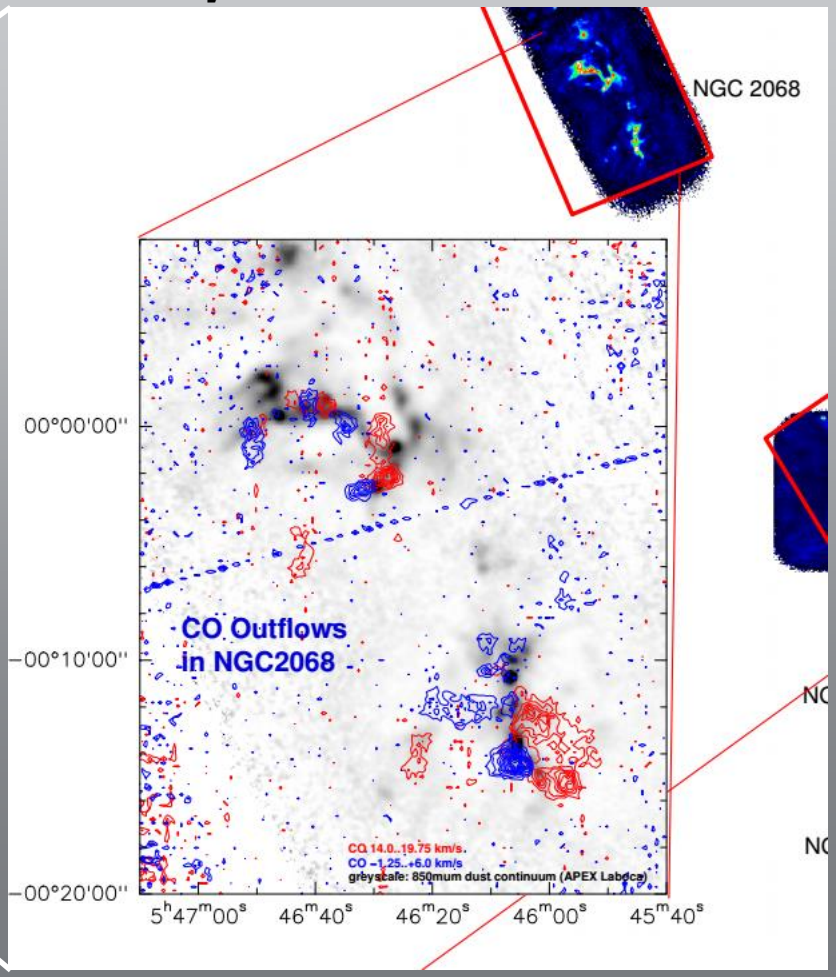

Lab Setup

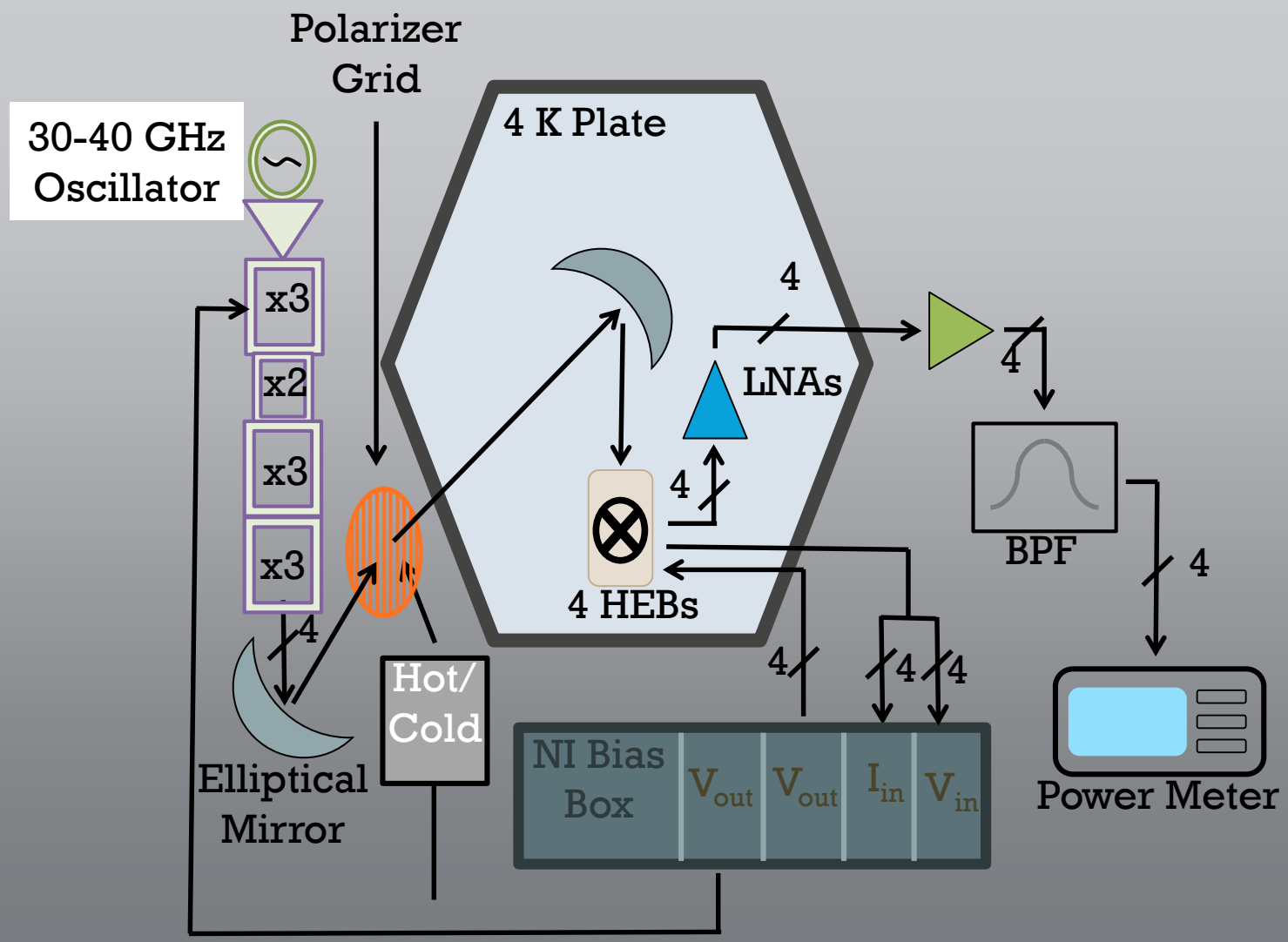
Polarizer Grid
30-40 GHz Oscillator
4 K Plate
x3
x2
x3
x3
4
4
LNAs
4
4
BPF
4
4 HEBs
Hot/ Cold
Elliptical Mirror
4
4
4
NI Bias Box
V_{out}
V_{out}
I_{in}
V_{in}
Power Meter

Jet Propulsion Laboratory
California Institute of Technology

Local Oscillator: 4-Pixel Multiplier Chain

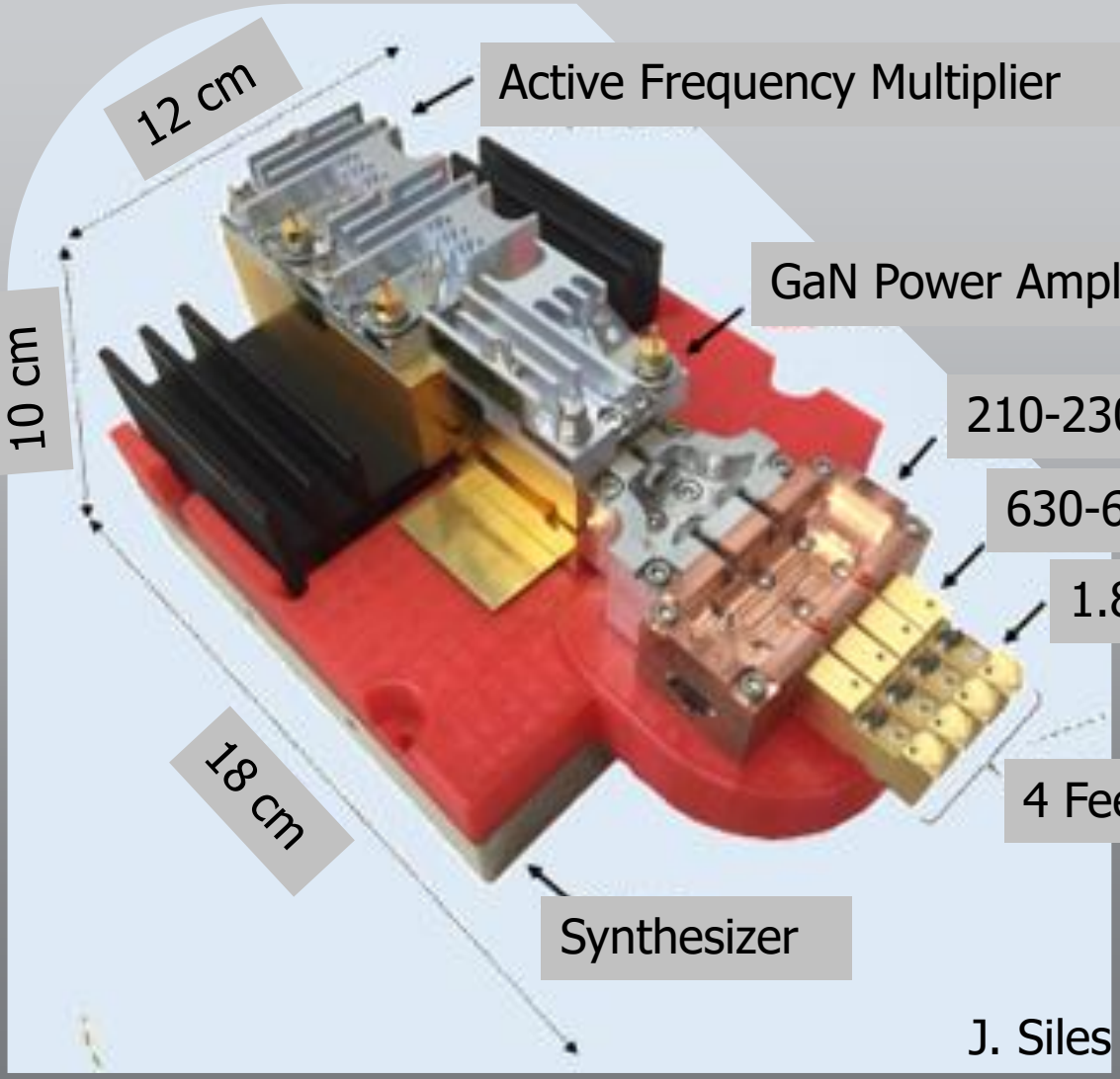

J. Siles

4-Pixel Mixer Block

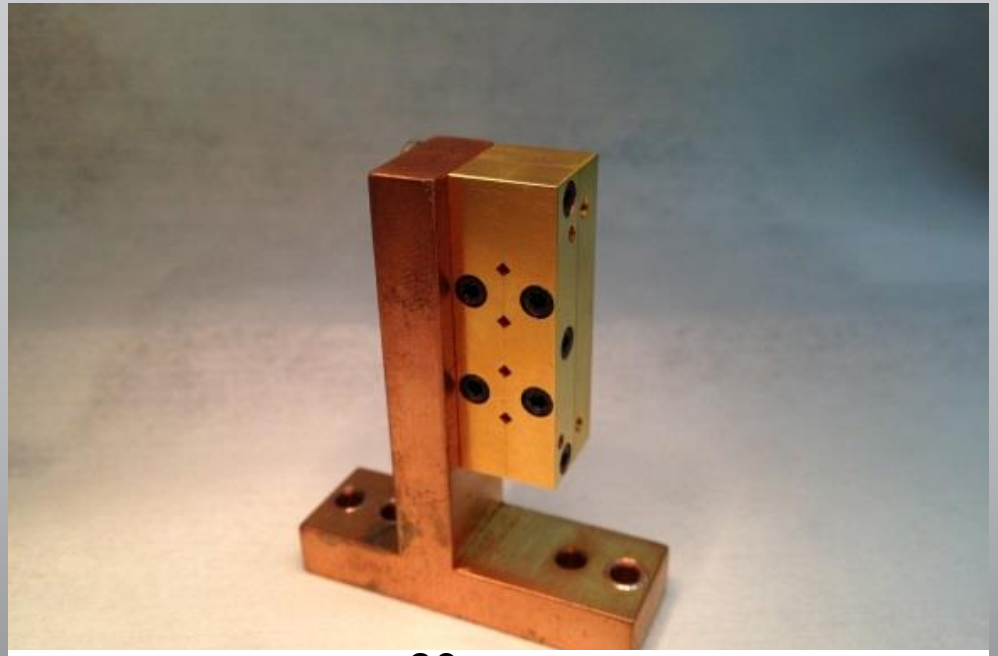

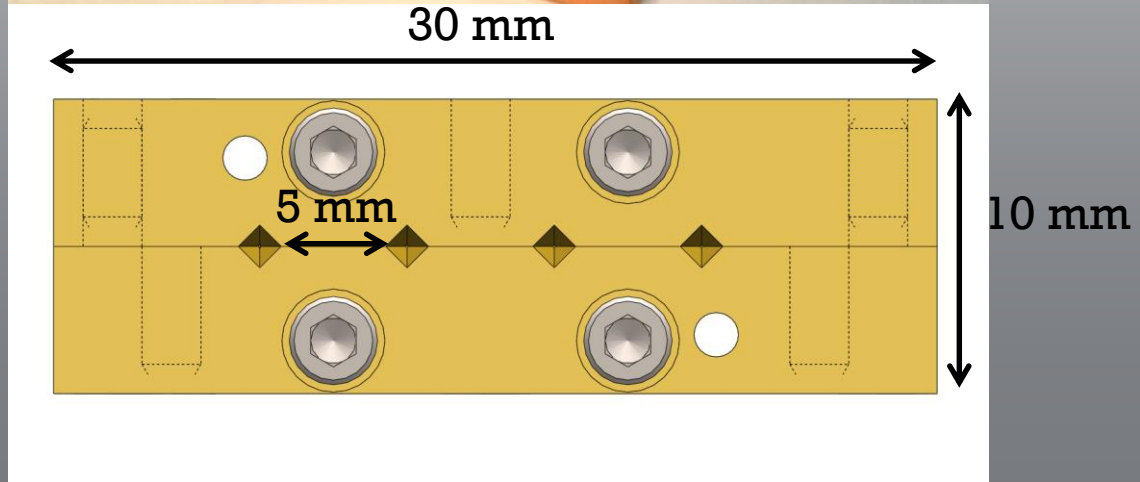

Mixers

SOI Chip-HEB Technology

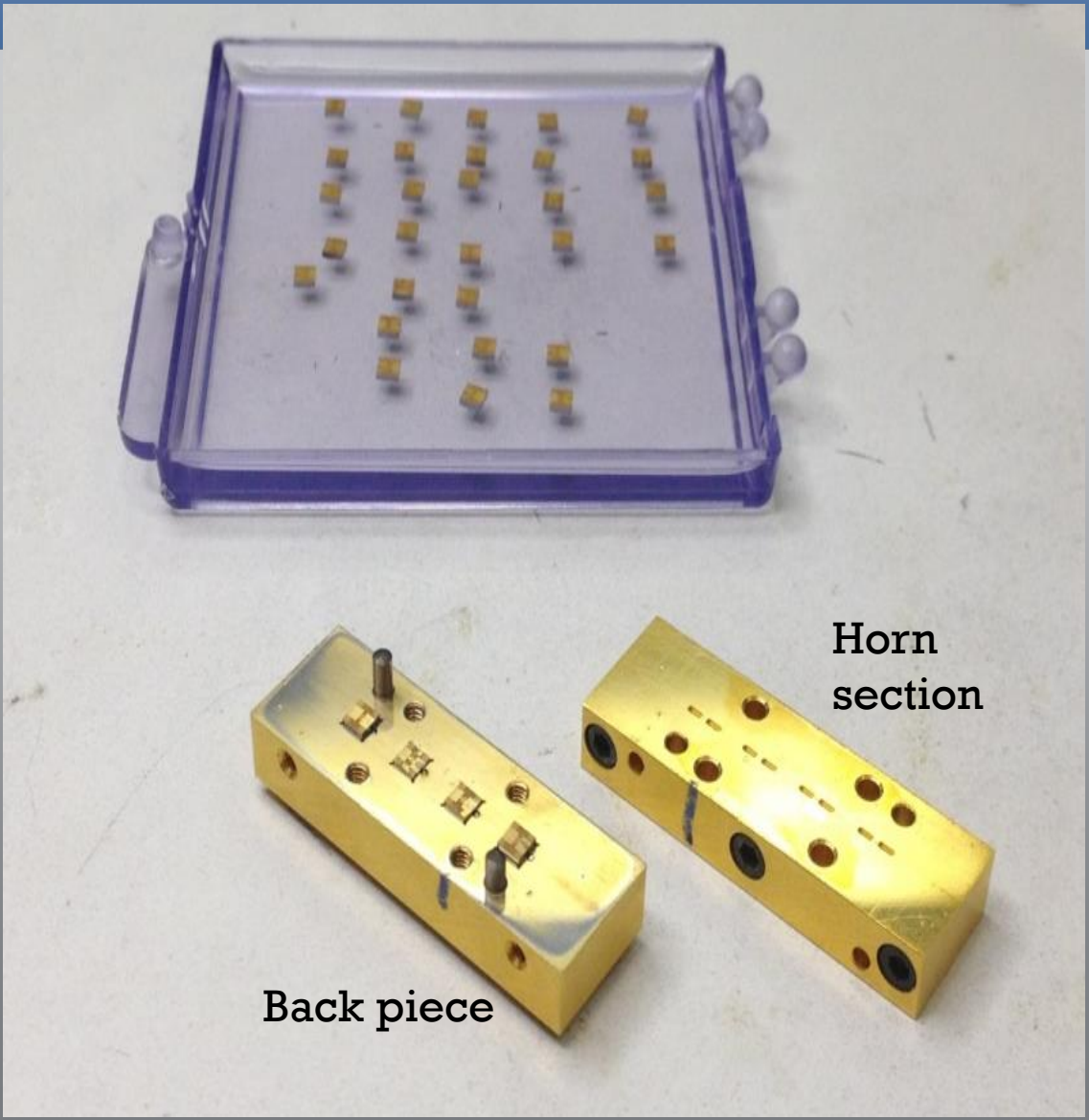

Mixers

SOI Chip-
HEB
Technology

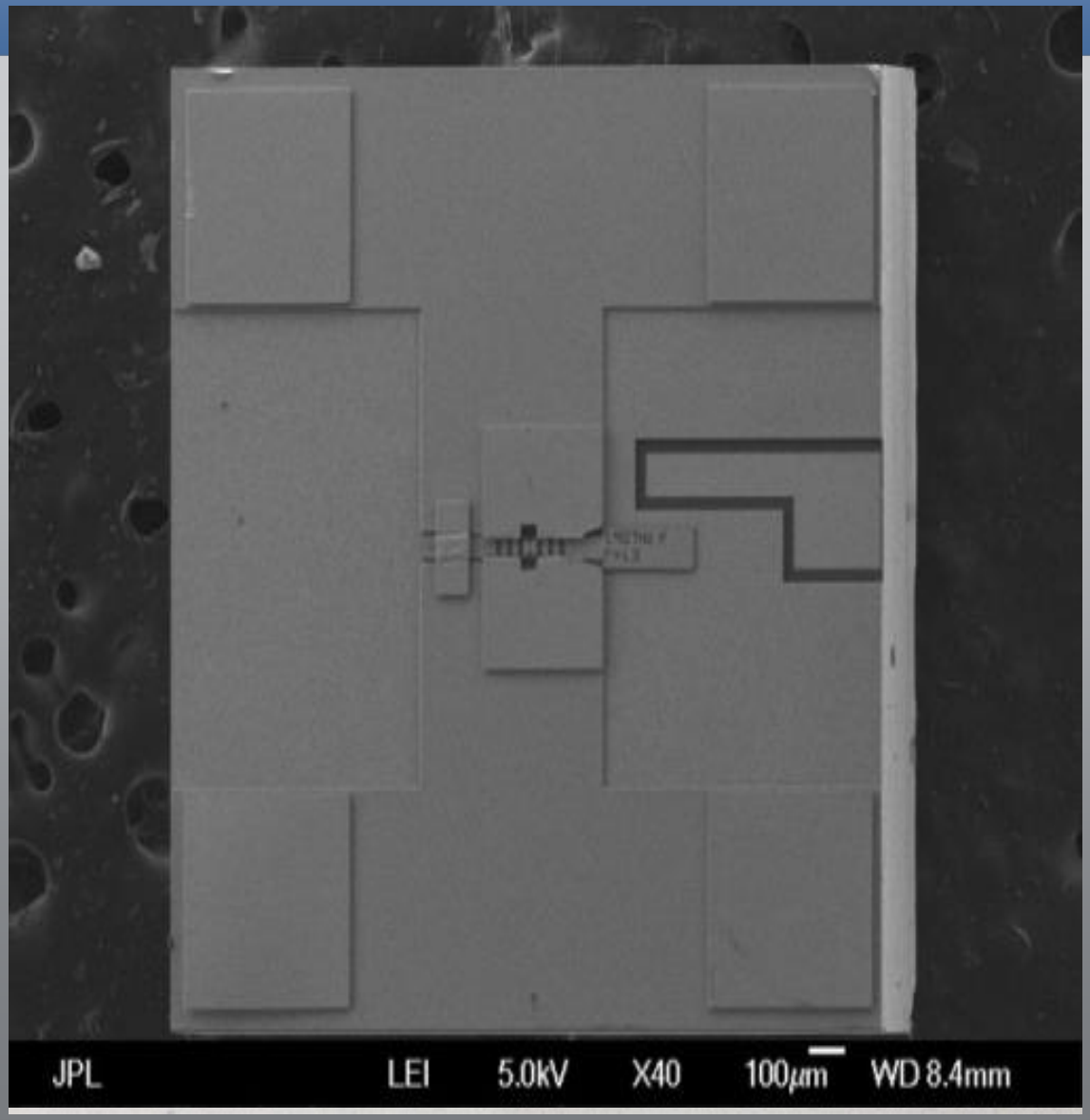

Mixers

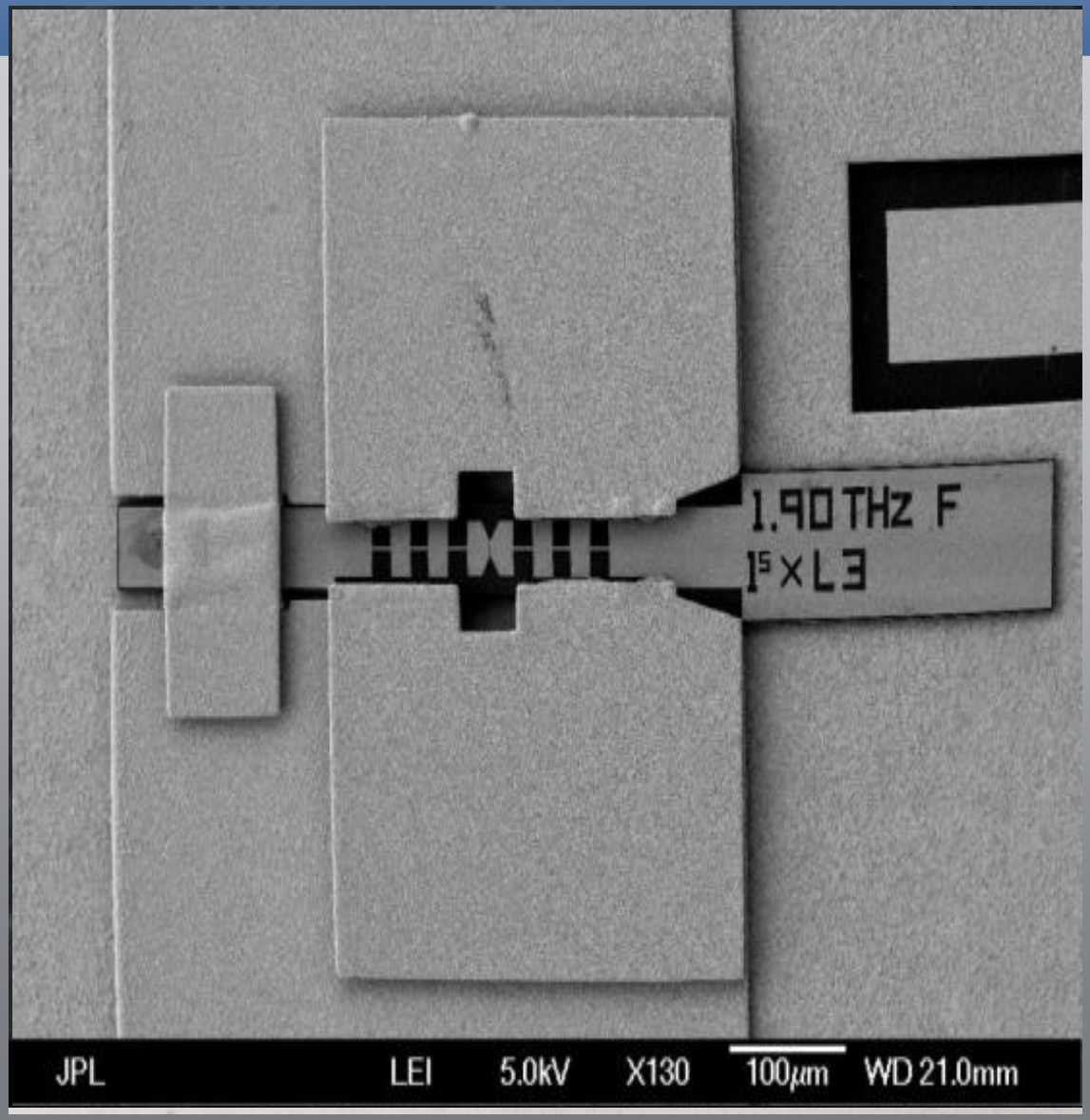

SOI Chip-
HEB
Technology

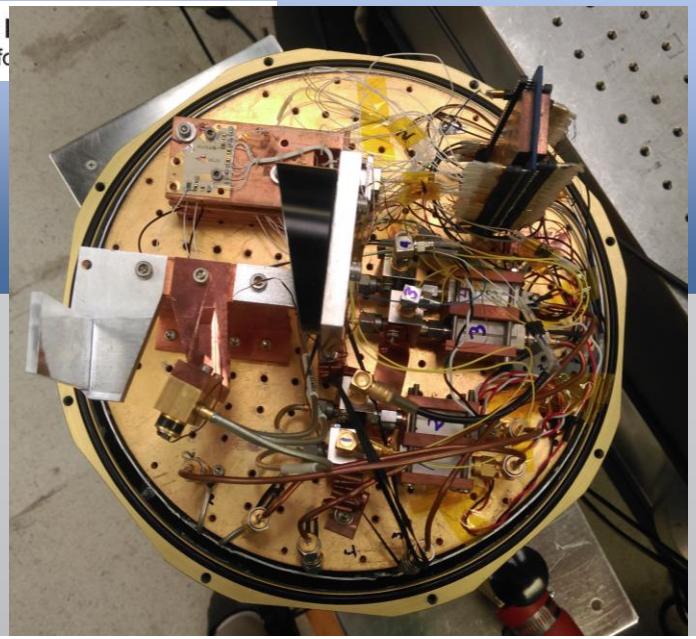

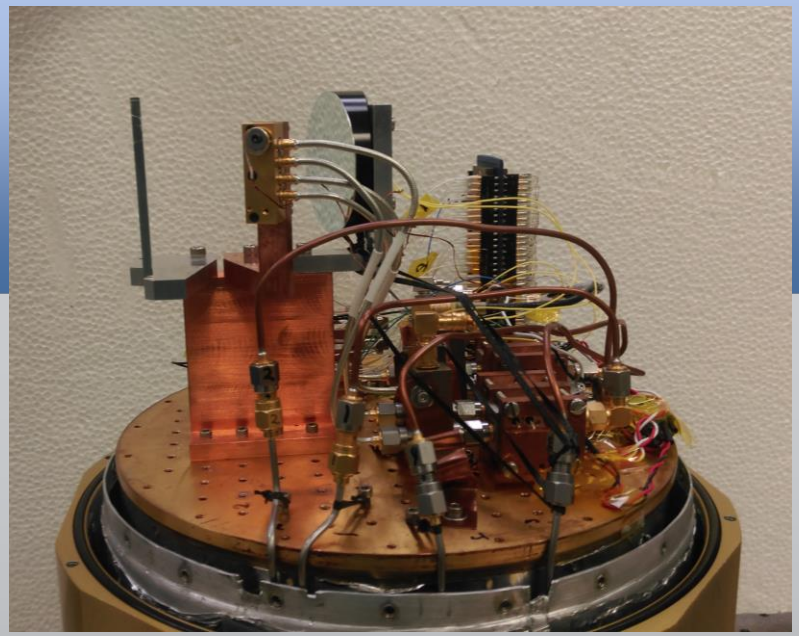

4 Pixel Array Inside the Cryostat

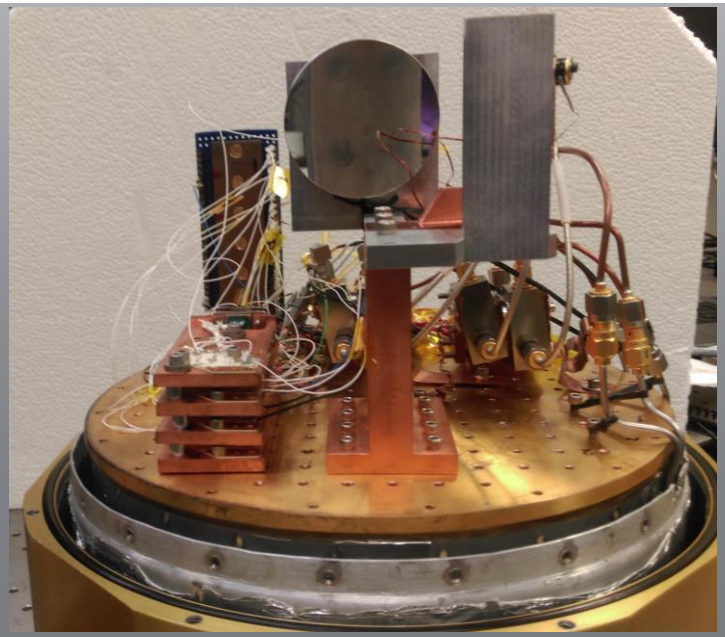

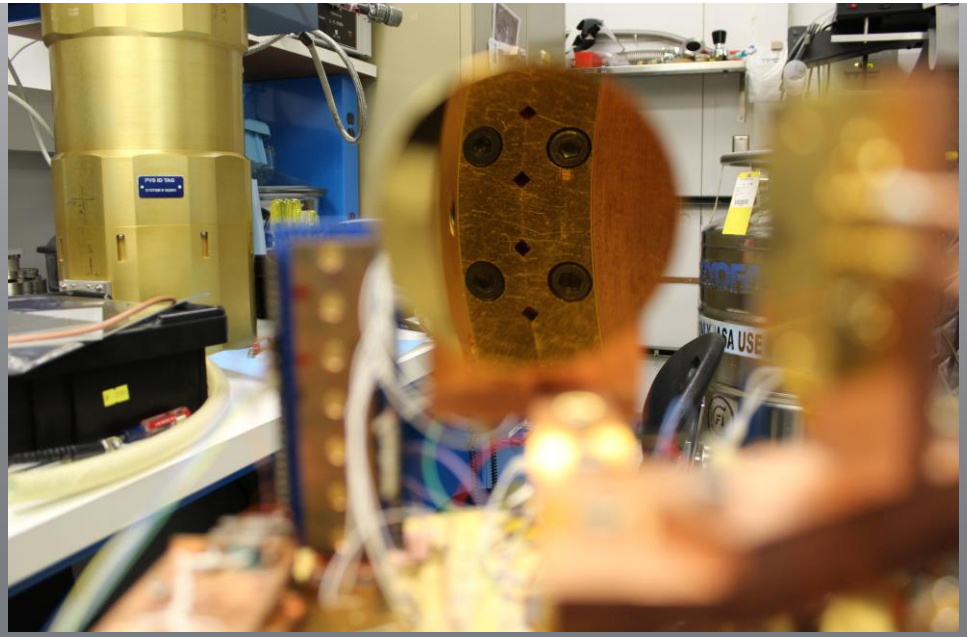

Lab Results

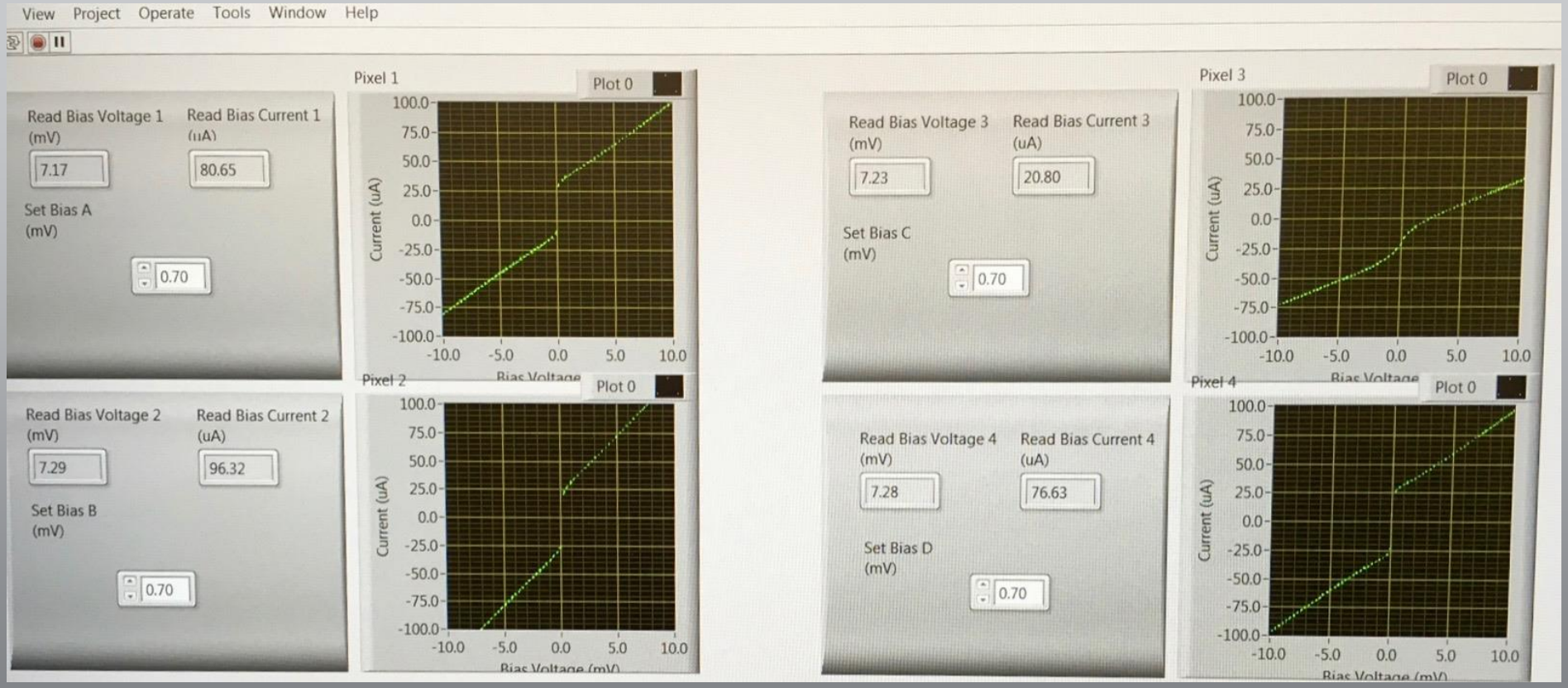
View Project Operate Tools Window Help
Pixel 1
Plot 0
Read Bias Voltage 1 (mV)
7.17
Read Bias Current 1 (uA)
80.65
Set Bias A (mV)
0.70
Current (uA)
Bias Voltage
Pixel 2
Plot 0
Read Bias Voltage 2 (mV)
7.29
Read Bias Current 2 (uA)
96.32
Set Bias B (mV)
0.70
Current (uA)
Bias Voltage (mV)
Pixel 3
Plot 0
Read Bias Voltage 3 (mV)
7.23
Read Bias Current 3 (uA)
20.80
Set Bias C (mV)
0.70
Current (uA)
Bias Voltage
Pixel 4
Plot 0
Read Bias Voltage 4 (mV)
7.28
Read Bias Current 4 (uA)
76.63
Set Bias D (mV)
0.70
Current (uA)
Bias Voltage (mV)

Lab Results

Using an IBOB spectrometer

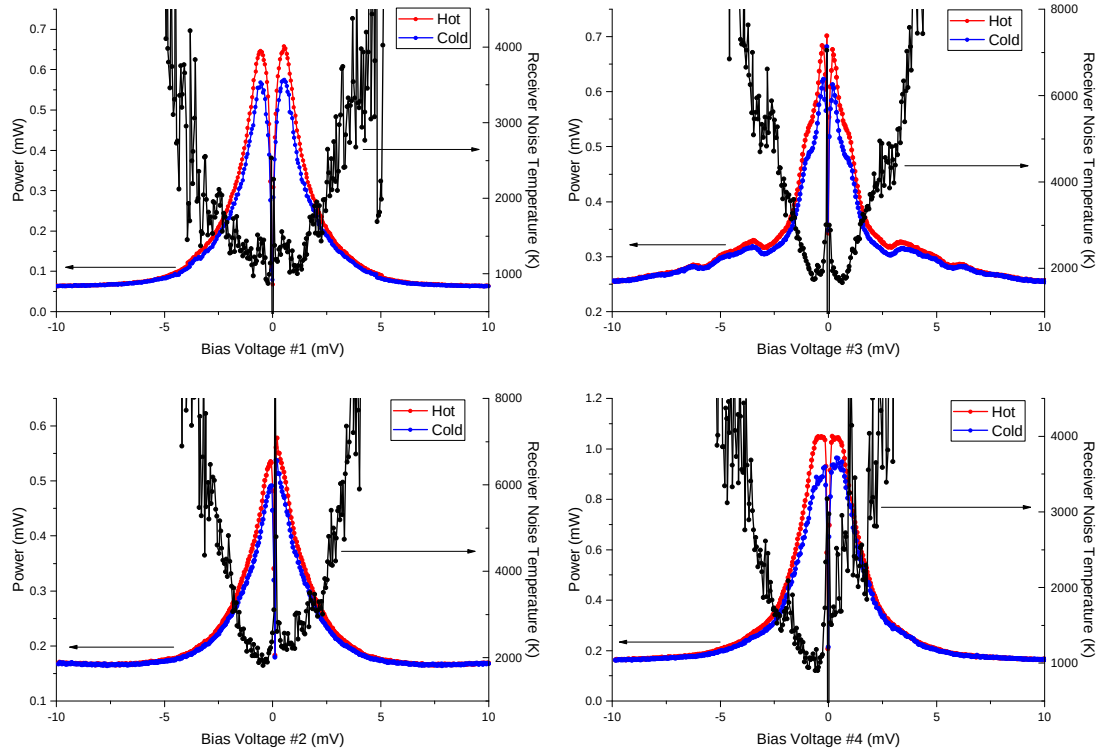

Lab Results

Using an IBOB spectrometer

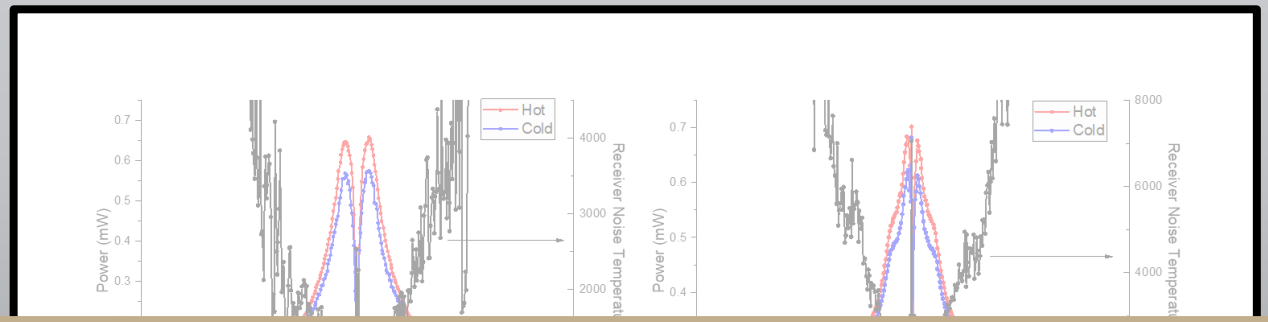

Pixel	Ω_{RT} (Ω)	Ω_{100K} (Ω)	I_C (μA)	$T_{RX, DSB}$ (K)
1	109	126	130	900
2	82	93	165	1800
3	130	179	30	1700
4	105	120	185	900

Lab Setup for 1.9 THz Spectra

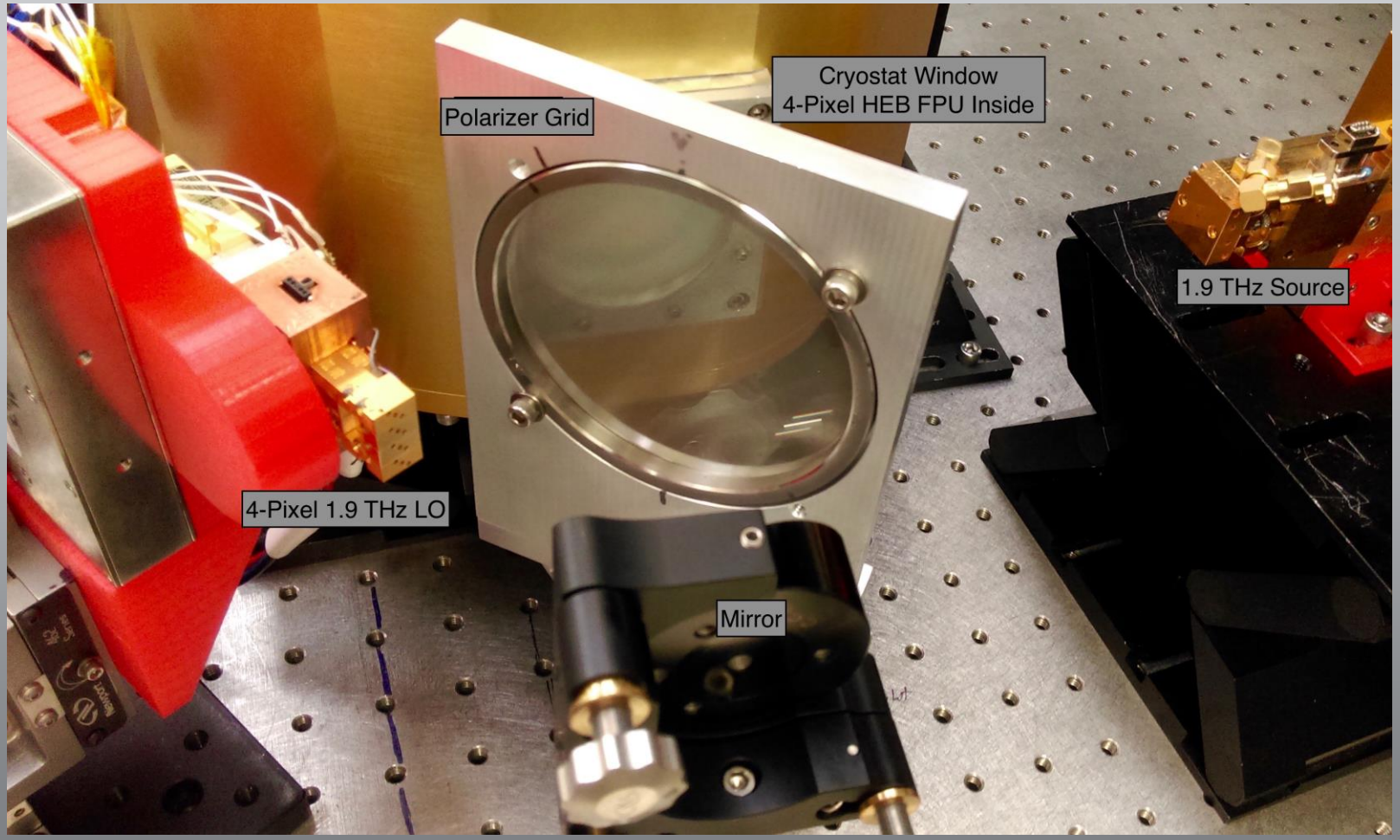

Measurement setup for 4-pixel heterodyne array receiver verification at 1.9 THz.

Lab Results

Using an IBOB spectrometer

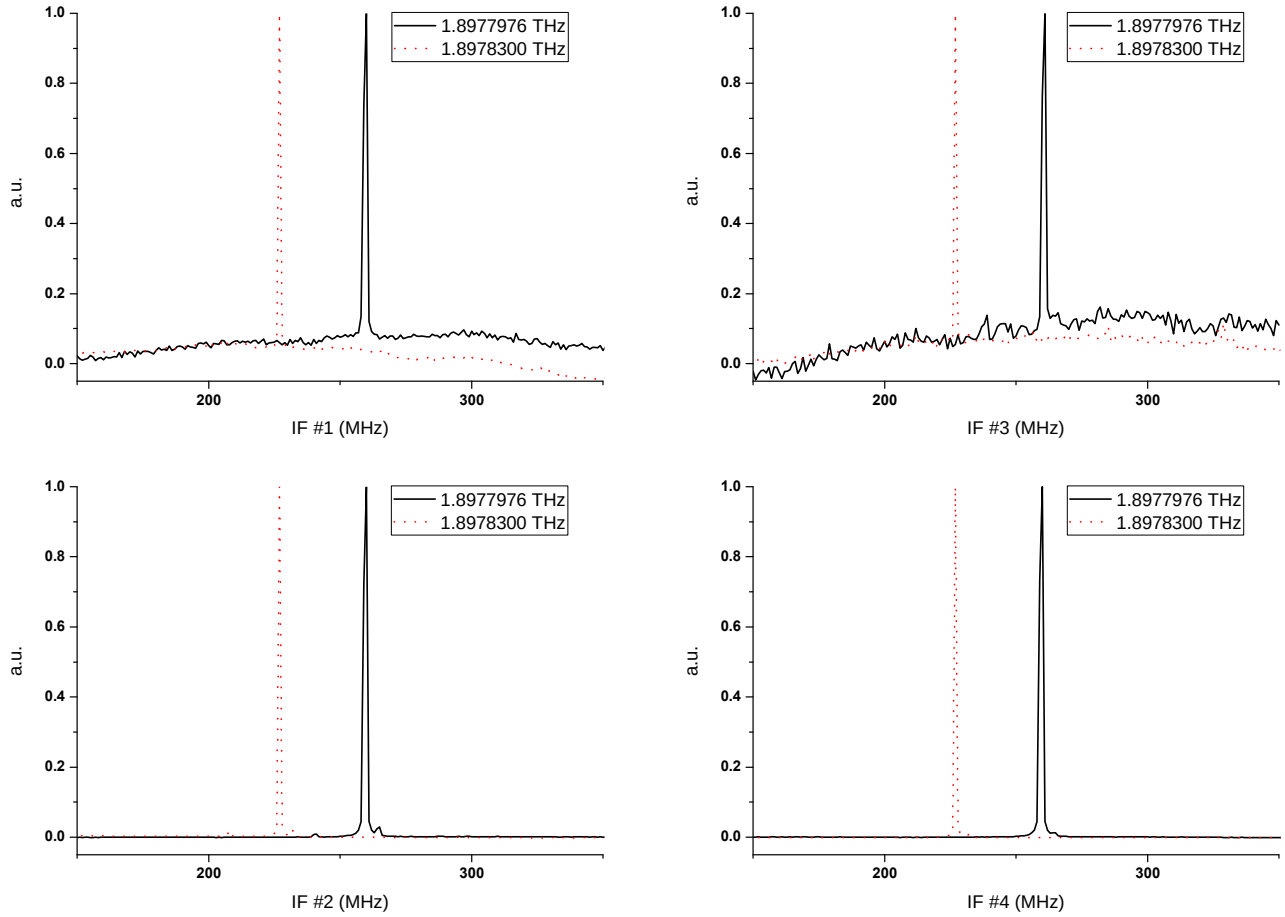

CMOS Spectrometer Processor Development

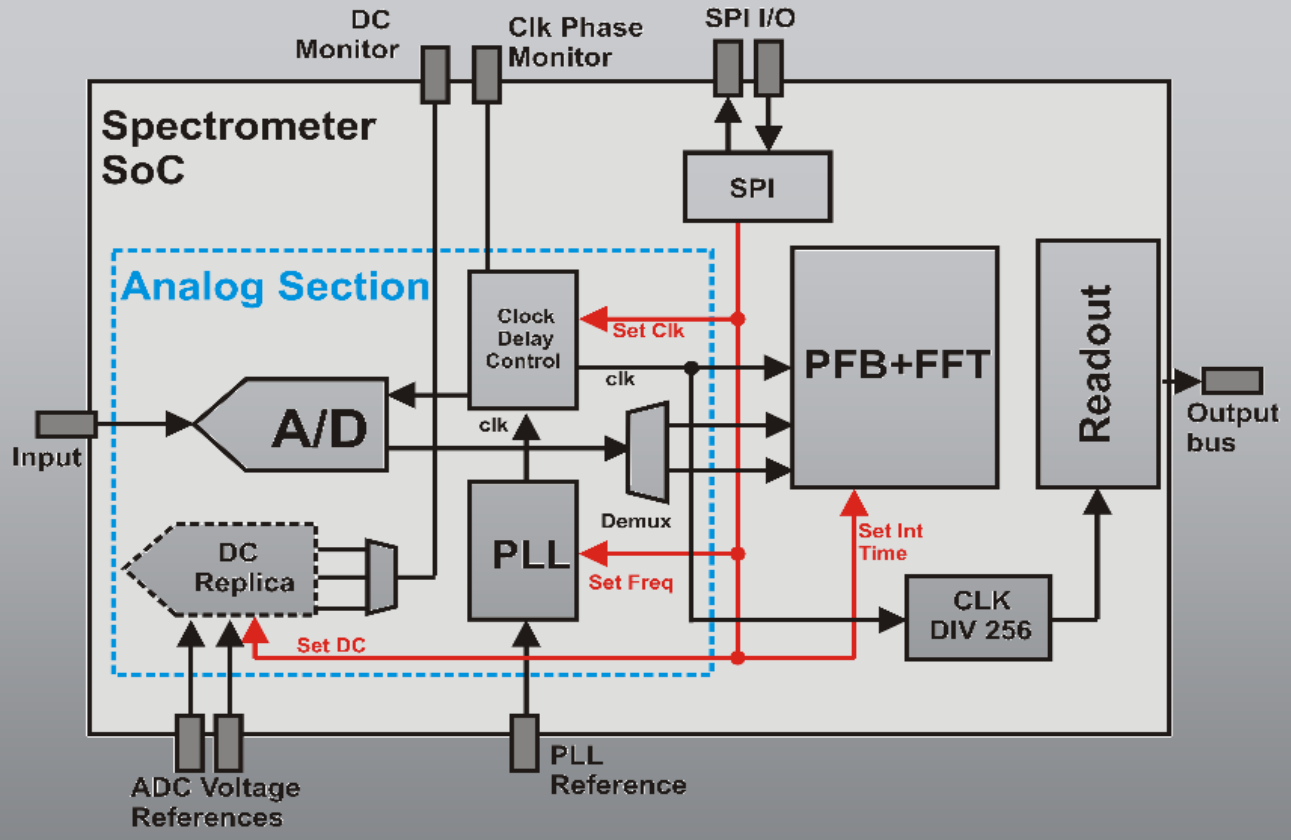

Joint UCLA-JPL developed system-on-chip (SoC) contain digitizers, FFT processors, and USB readout circuitry to provide highly integrated and low-power spectral processing.

Jet Propulsion Laboratory
California Institute of Technology

CMOS Spectrometer Processor Development

2.0 GS/s Complex FFT Version

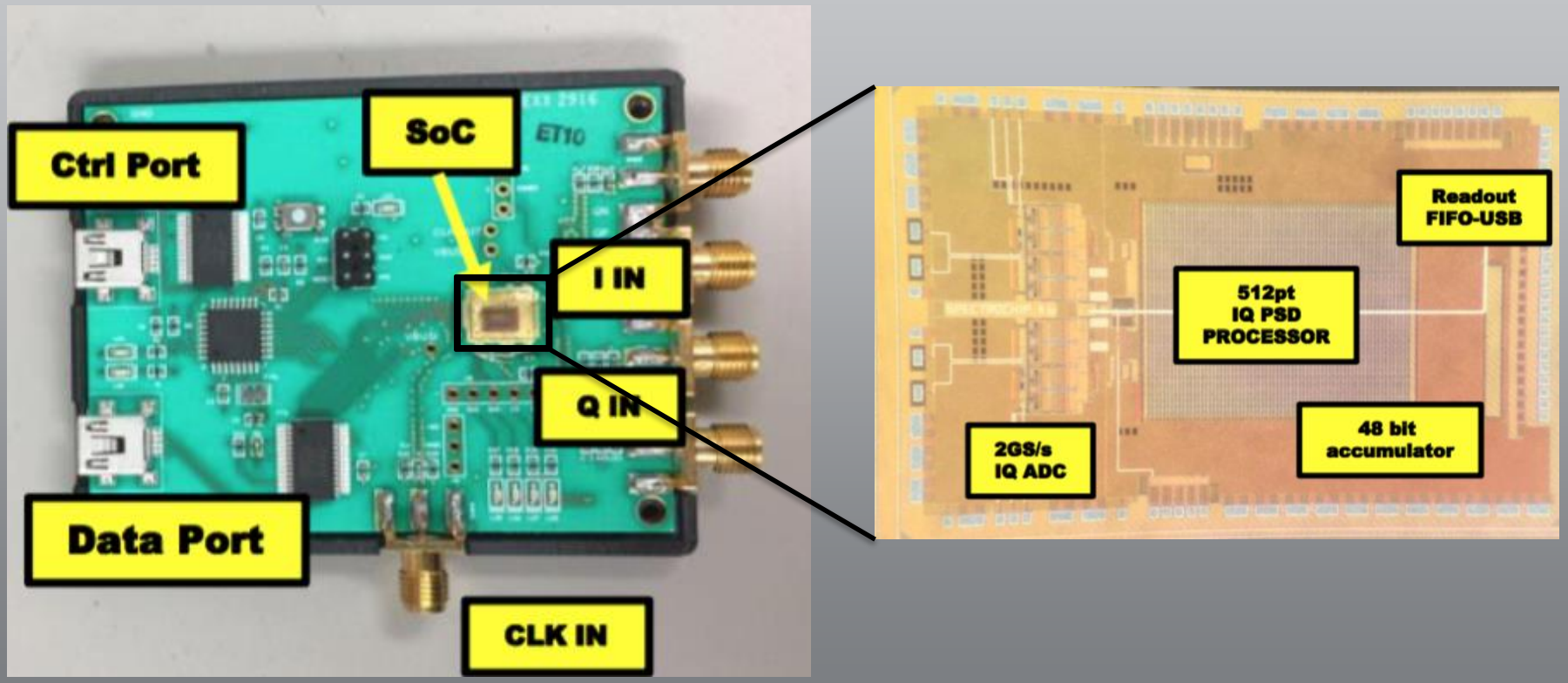

Jet Propulsion Laboratory
California Institute of Technology

CMOS Spectrometer 2.0 GHz/s Specs

2.0 GS/s Complex FFT Version

Parameter	Minimum	Typical	Maximum	Unit
Power Consumption	-	500	700	mW
Dynamic Range	-28	0	+5	dBm
Clock Frequency	1	-	2000	MHz
Bandwidth	-	6000	8000	MHz
Number of FFT channels (IQ)	-	512	-	MHz
Number of FFT channels (DSB)	-	256	-	Channels

CMOS Spectrometer Processor Testing

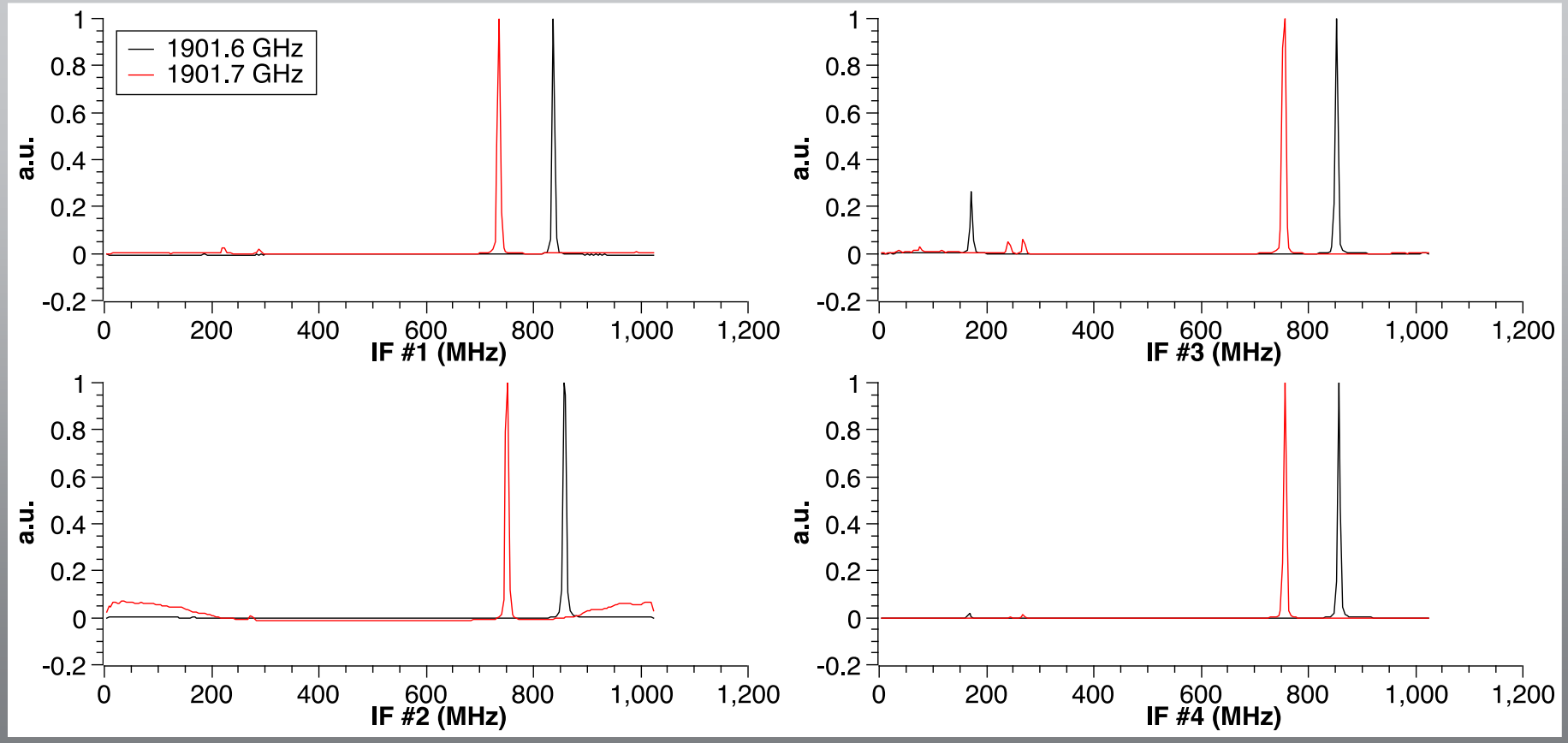

End-to-End Receiver Stability

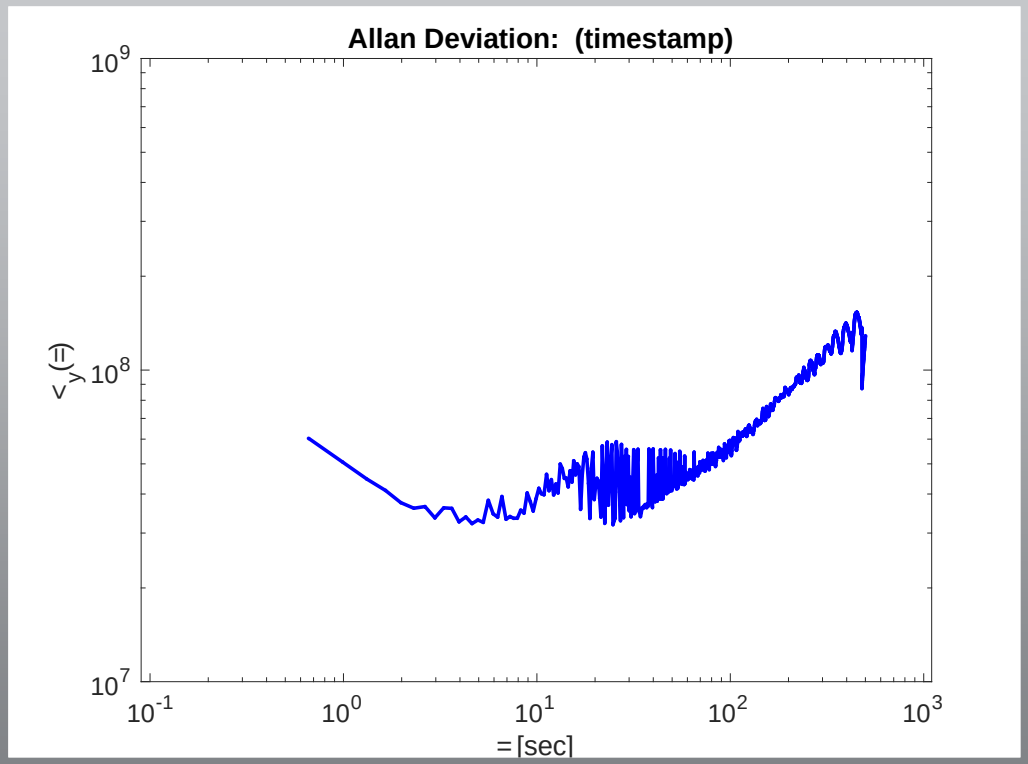

Spectrometer stability was longer than 1000 s.

End-to-end stabilized spectroscopic Allan Variance ~ 10 s

Stabilized output LO power at 1.9 THz through a PID loop between the HEB mixer current and LO 660 GHz doubler bias voltage.

Jet Propulsion Laboratory
California Institute of Technology

CMOS Spectrometer Processor Development

2.6 GS/s Real FFT Version

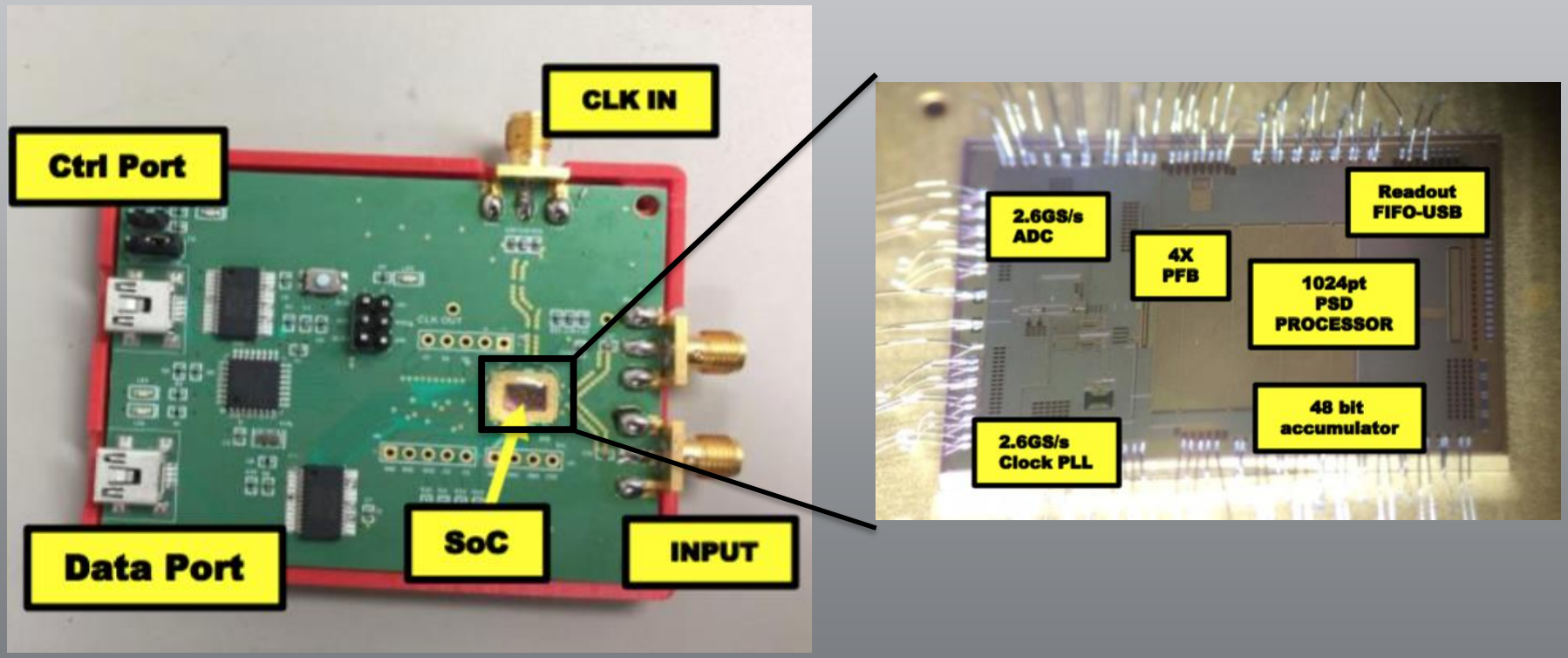

Jet Propulsion Laboratory
California Institute of Technology

CMOS Spectrometer 2.6 GHz/s Specs

2.6 GS/s Real FFT Version

Parameter	Minimum	Typical	Maximum	Unit
Power Consumption	-	500	700	mW
Dynamic Range	-5	0	+5	dBm
Clock Frequency (PFB enabled)	1	-	2000	MHz
Clock Frequency (PFB disabled)	1	2000	2600	MHz
Bandwidth	-	-	9000	MHz
Number of FFT channels	-	1024	-	Channels

Jet Propulsion Laboratory
California Institute of Technology

CMOS Spectrometer Processor Testing

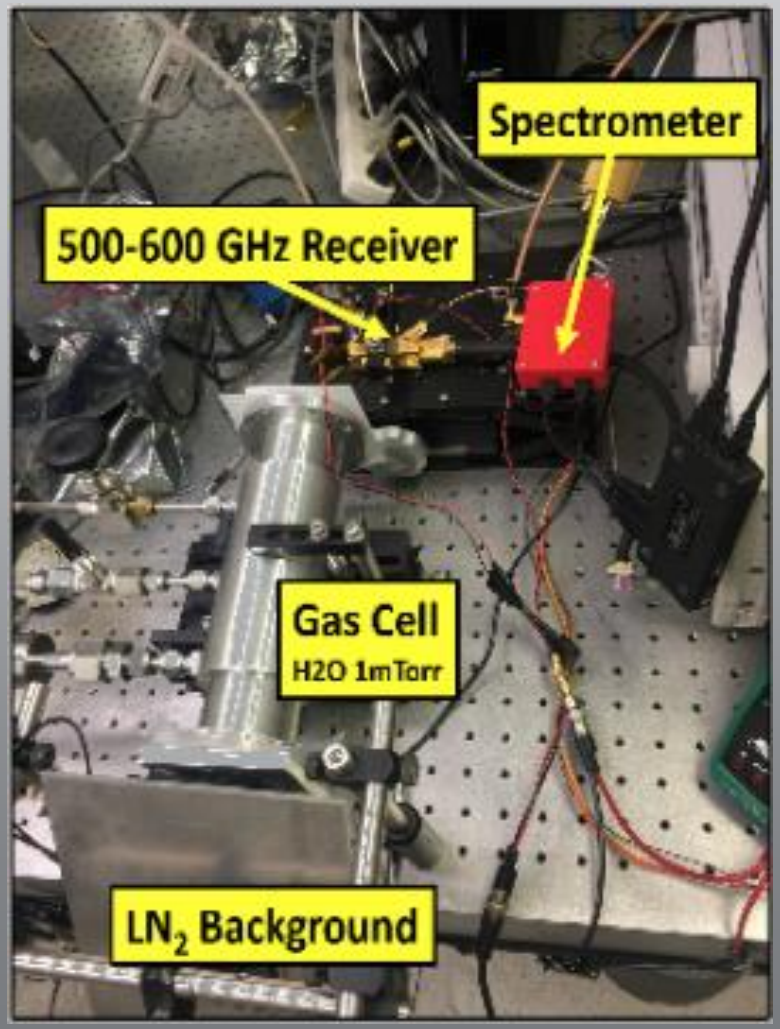

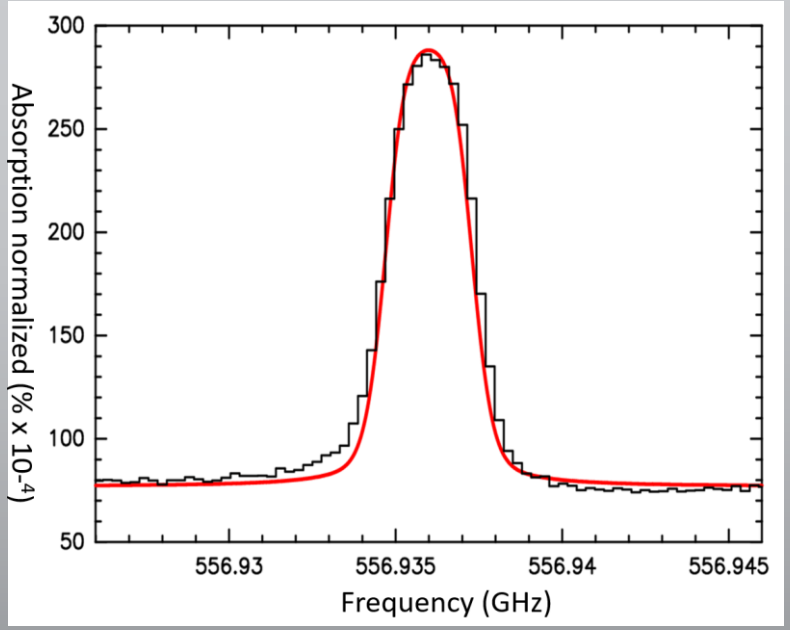

Measured by Spectrometer Chip

Expected from H_2O abundance and temperature

16-Pixel Mixer Prototype Block

Next steps …

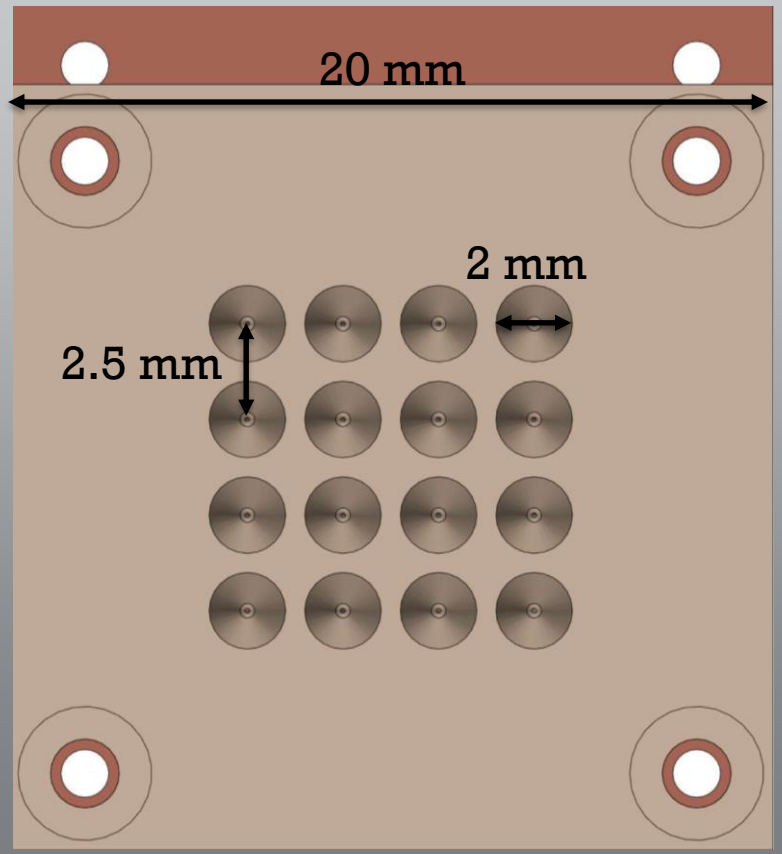

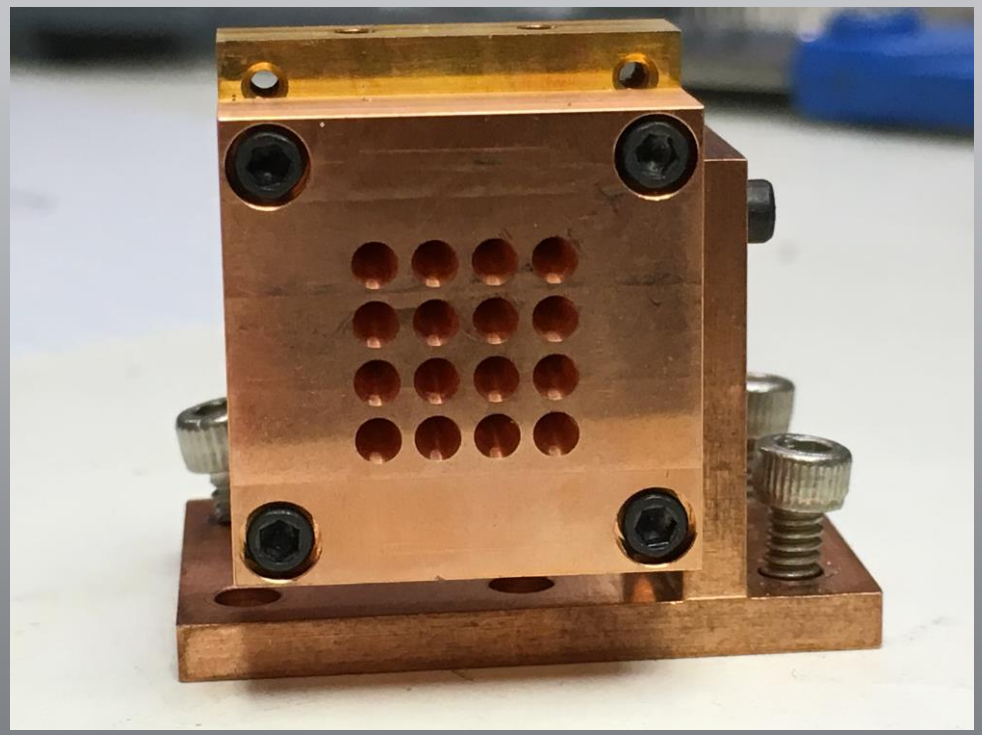

Summary

We have demonstrated an compact end-to-end test of a 4x1-pixel heterodyne array receiver at 1.9 THz.

- High sensitivity ~900 K DSB for best pixels
- Stability with CMOS spectrometer ~10 s
- The design is scalable in both frequency and number of pixels
- 16-pixel array has been designed and is currently under test

CMOS technology creates a compact spectrometer with low power consumption.

BACK UP SLIDES

CMOS Spectrometer Processor Development

Poly-Phase Window Generation

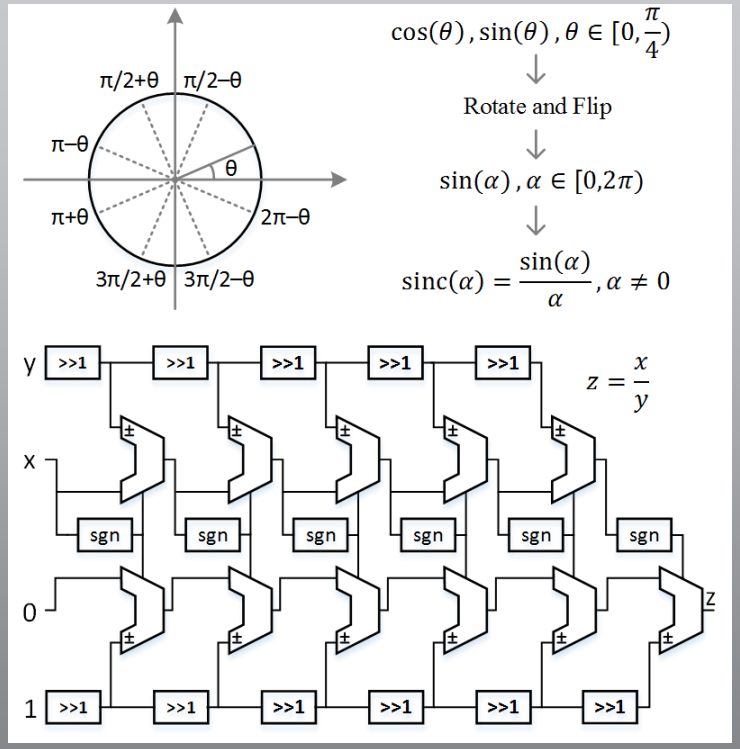

3B /3GS Flash ADC

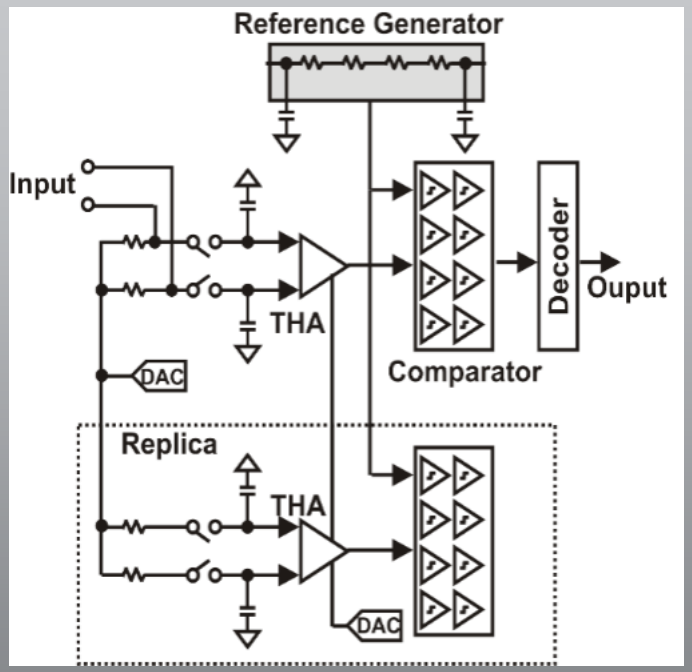

Integrated PLL for clock generation, radiation sensors, and calibration circuitry for tuning clock skew on each digital block and bias tuning all the ADC sub-circuits.

CMOS Spectrometer Processor Development
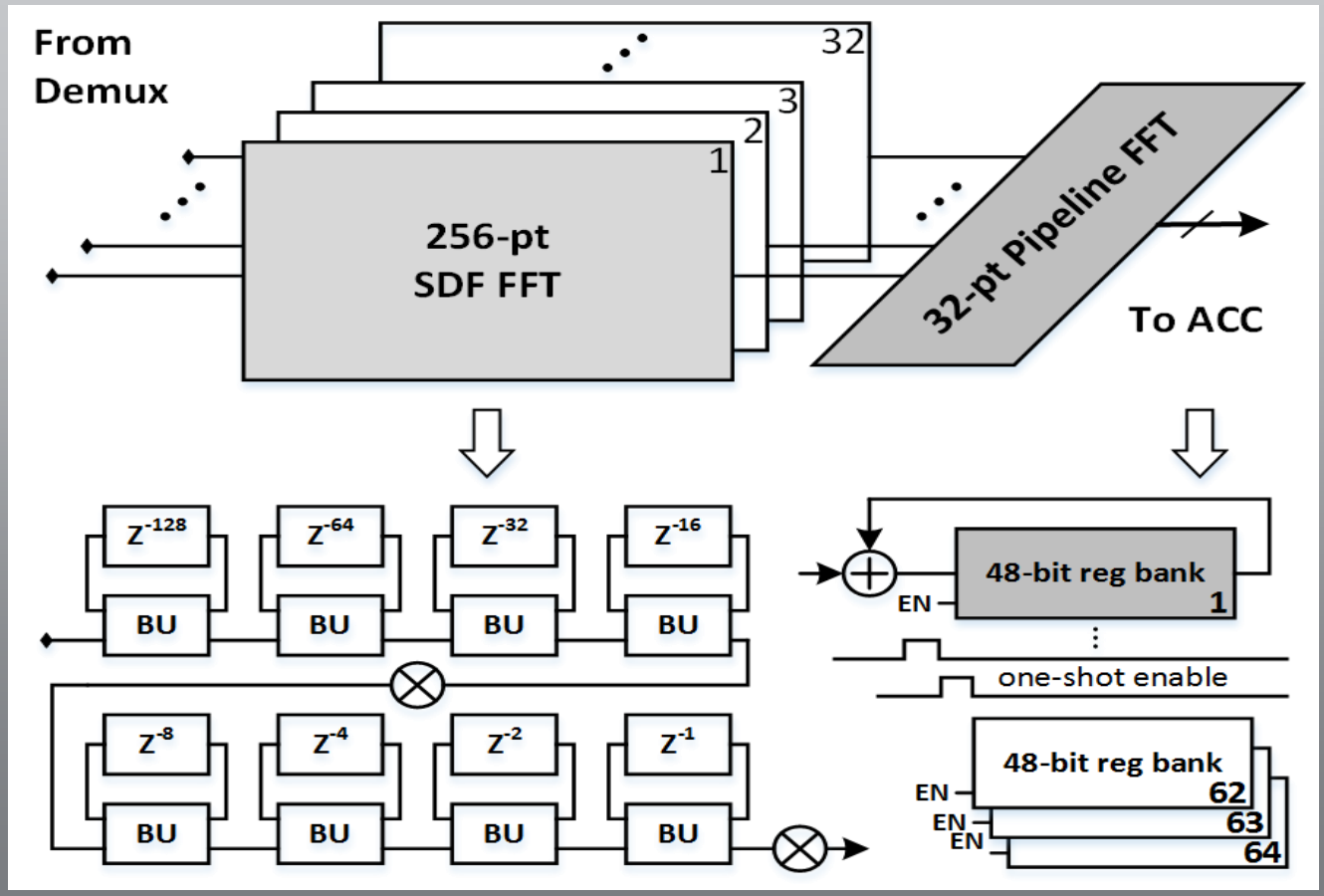
Interleaved FFT Processor Core