Development of Miniature Robotic Manipulators to Enable SmallSat Clusters

Ryan McCormick, Alex Austin, Lou Cubrich, Beau Marth, Rudranarayan Mukherjee

Jet Propulsion Laboratory,

California Institute of Technology

4800 Oak Grove Dr.

Pasadena, CA 91109

626-487-0203

ryan.l.mccormick@jpl.nasa.gov, alex.m.austin@gmail.com, lou.cubrich@gmail.com, beaumarth@gmail.com, rudranarayan.m.mukherjee@jpl.nasa.gov

Thibaut Wenger, Mihir Patel, Koki Ho

University of Illinois at Urbana Champaign

104 S Wright St.

Urbana, IL 61801

217-265-0286

twenger2@illinois.edu, mjpatel7@illinois.edu, kokiho@illinois.edu

The research described in this presentation was carried out at the Jet Propulsion Laboratory, California Institute of Technology, under a contract with the National Aeronautics and Space Administration (NASA).
Copyright 2016 California Institute of Technology. U.S. Government sponsorship acknowledged.

Jet Propulsion Laboratory
California Institute of Technology

Cluster Forming On-board Robotic Manipulators (C-FORM)

- On-board miniature robotic manipulators will enable CubeSat and SmallSats to dock to form large, scalable instruments
- Concept of Operations
  - Smallsat with C-Form would:
    - Launch as secondary payload
    - Deployed via P-POD
    - Rendezvous and deploy arms
    - Perform docking
    - Continue until cluster completed
- Advantages:
  - Precise, multi-DOF alignment control
  - Separation distance between SmallSats
  - Relative/gross reposition
  - Scalable in number and size of cluster elements
  - Decreased risk of collision during docking
  - Formation maintained without power via brakes

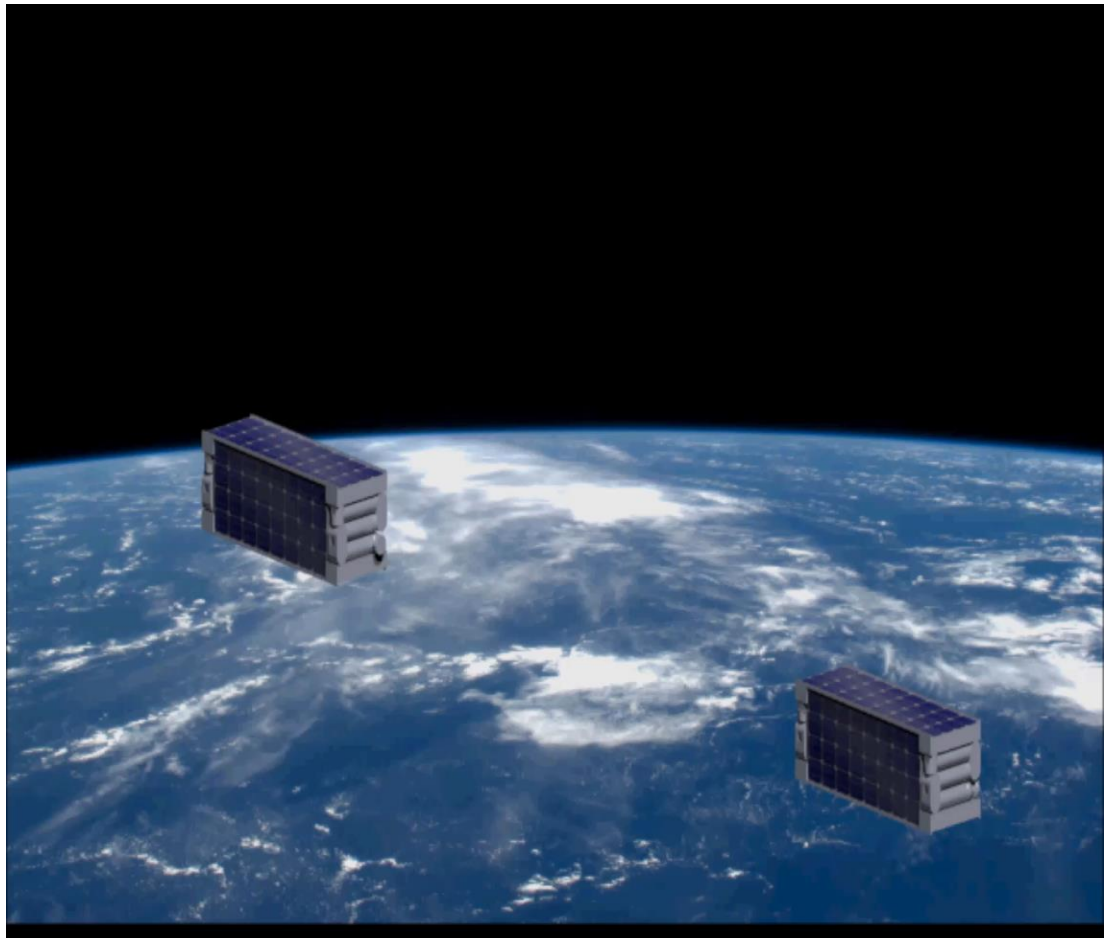

POC: Ryan McCormick (ryan.l.mccormick@jpl.nasa.gov),
Rudranarayan Mukherjee (rudranarayan.m.mukherjee@jpl.nasa.gov)

Potential Application Ideas

Construction	Positioning	Reconfigurability	Arm Manipulation
Synthetic aperture radar	Real-time data transmission	Large distributed array (adaptability to different missions)	Large debris tracking and collision avoidance
ISARA reflectarray	Large solar panel pointing	Sample transfer to and from ISS	Satellite inspection with camera
Optical mirror	Data relay for deep space communications	Replaceable parts to extend mission life	Satellite repair
Large Solar Sail	Data relay for far side of moon in L2 halo orbit	New payload modules to expand capabilities of larger satellites	Capture space debris
Altimeter	Interferometry	Steerable radar to cover large swaths	In-orbit assembly

POC: Ryan McCormick (ryan.l.mccormick@jpl.nasa.gov),
Rudranarayan Mukherjee (rudranarayan.m.mukherjee@jpl.nasa.gov)

Application: Synthetic Aperture Radar (SAR)

Large Aperture Assembly: Separation distance enables larger aperture/unit

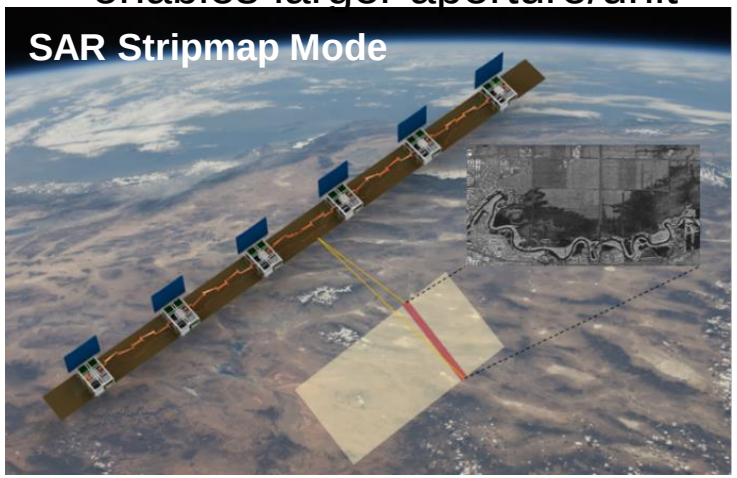

Relative Repositioning: Scan or stare with instruments, adjust alignment

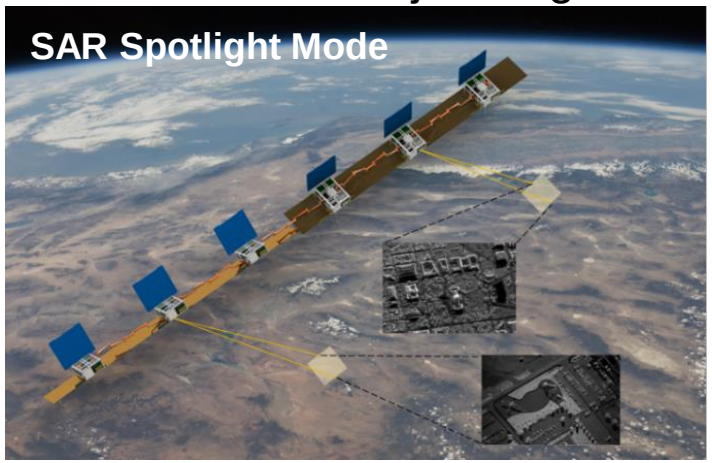

Reconfiguration: Add additional capability or replacement individual units

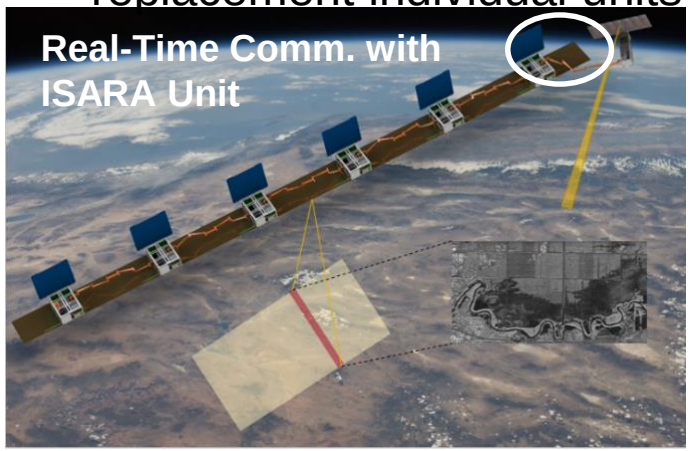

Comparison: COSMO-SKYMED SAR Satellite

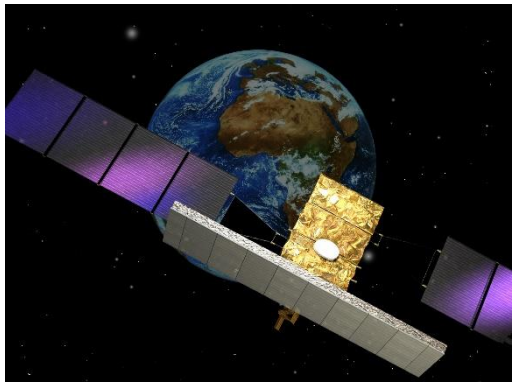

COSMO-SKYMED Rendering (ESA)

POC: Ryan McCormick (ryan.l.mccormick@jpl.nasa.gov),
Rudranarayan Mukherjee (rudranarayan.m.mukherjee@jpl.nasa.gov)

State of the Art

- Robotic docking
  - ISS/Shuttle, DARPA Orbital Express
    - Too large for SmallSats
- CubeSat Docking
  - CPOD, AARest
    - Flush docking, no relative repositioning
- SmallSat Manipulators
  - KRAKEN, IRIS
    - Significantly larger, not designed for docking
- Miniature Robots
    - C-FORM builds off PI's experience in miniature surgical robots

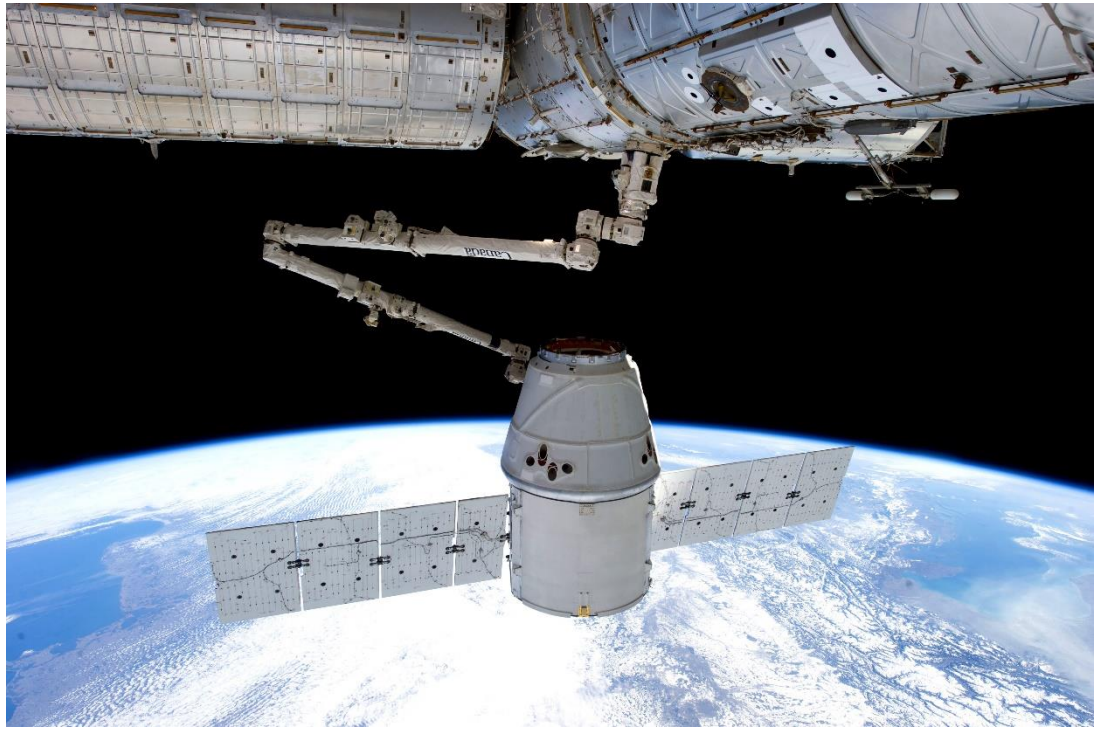

Robotic docking on ISS (NASA)

POC: Ryan McCormick (ryan.l.mccormick@jpl.nasa.gov),
Rudranarayan Mukherjee (rudranarayan.m.mukherjee@jpl.nasa.gov)

Arm Overview

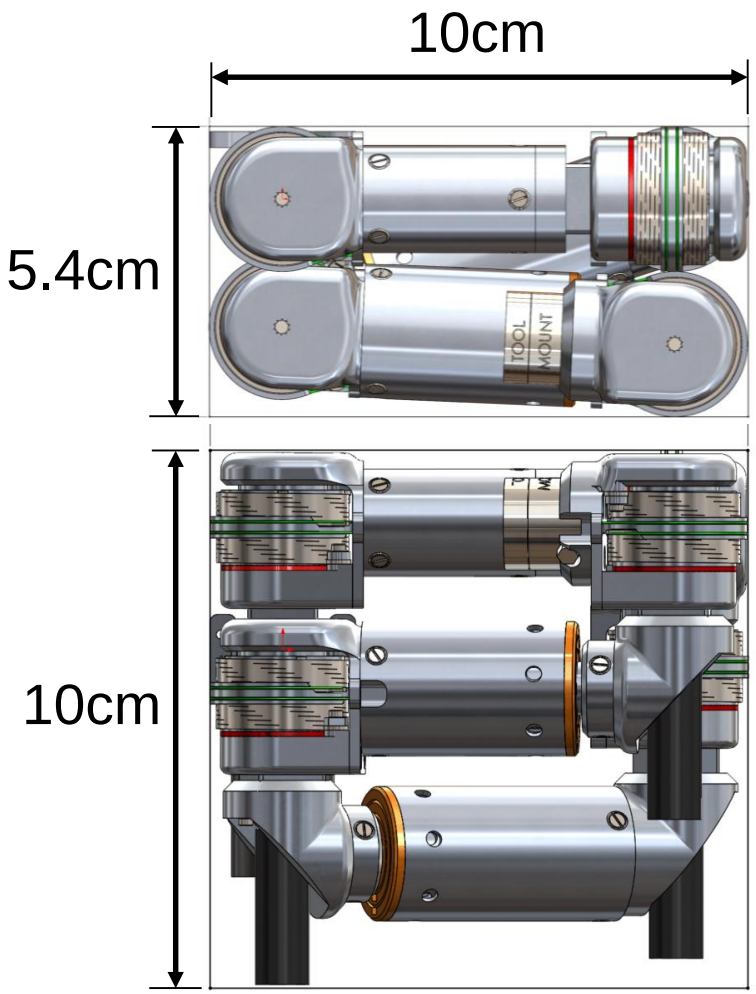

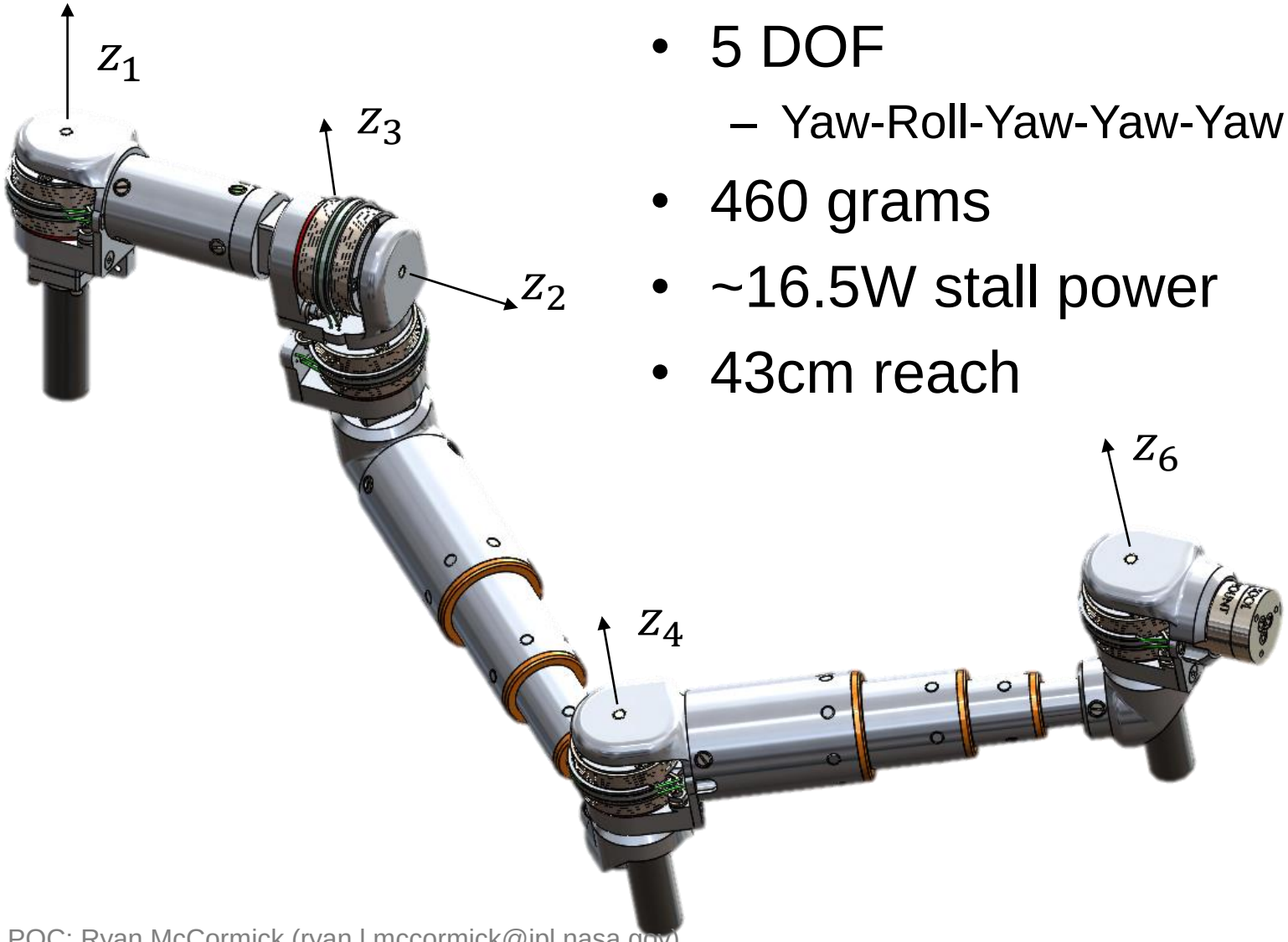

- 0.5U Stowage Volume
- 5 DOF
  - Yaw-Roll-Yaw-Yaw-Yaw
- 460 grams
- ~16.5W stall power
- 43cm reach

POC: Ryan McCormick (ryan.l.mccormick@jpl.nasa.gov),
Rudranarayan Mukherjee (rudranarayan.m.mukherjee@jpl.nasa.gov)

Deployable Links

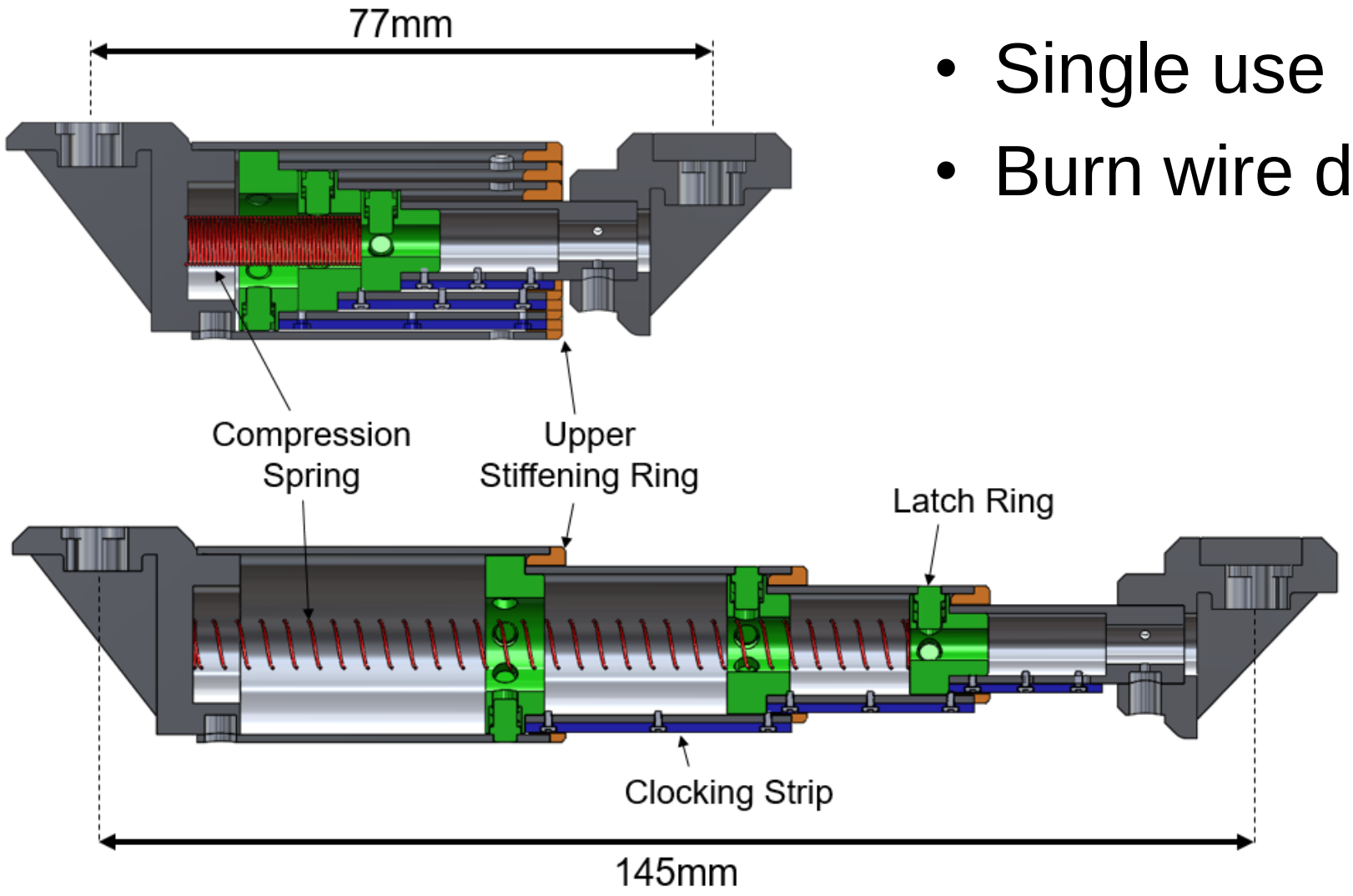

- Single use
- Burn wire deployment

POC: Ryan McCormick (ryan.l.mccormick@jpl.nasa.gov),
Rudranarayan Mukherjee (rudranarayan.m.mukherjee@jpl.nasa.gov)

Holding Brakes

- Power-off holding brakes
- COTS brakes are either too large or weak

- Custom brake design: **Spring-wrap brake**
- Take advantage of existing joint geometry
- Combine two spring clutches
  - Install in opposite directions
- Actuate springs using nitinol muscle wire

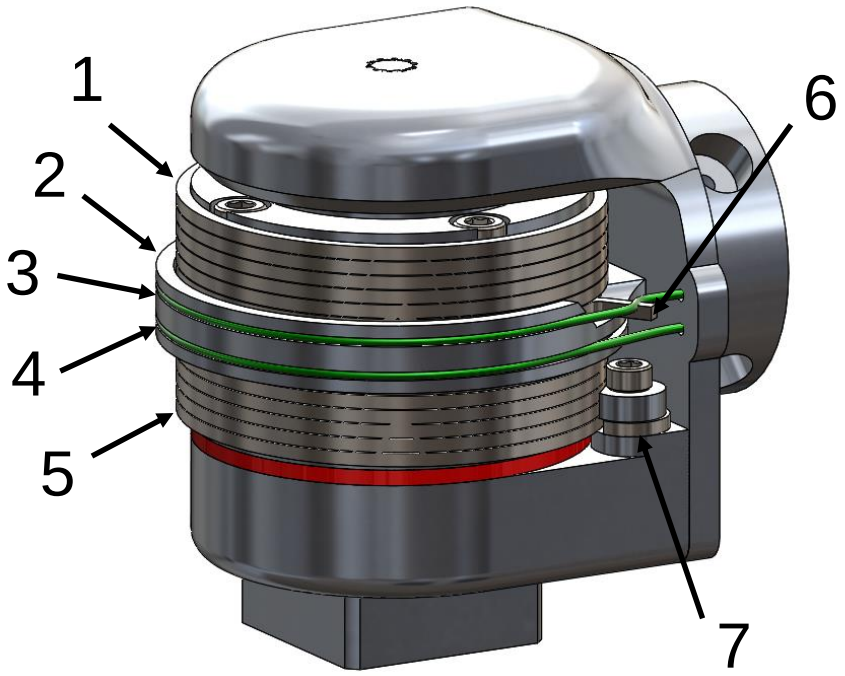

1	Spring 1
2	Gearbox Adapter Shaft
3	Wire Guide-Support
4	Muscle Wire 1
5	Muscle Wire 2
6	Spring 1 Control Tang
7	Spring 2 Mount Tang

POC: Ryan McCormick (ryan.l.mccormick@jpl.nasa.gov),
Rudranarayan Mukherjee (rudranarayan.m.mukherjee@jpl.nasa.gov)

Docking End Effector

- Fit within arm link volume
- 1 cm sphere of uncertainty
- HOP Actuator sets to open position before docking
- Latching occurs instantaneously based on contact
  - No sensors, no active actuation during latching
- Reversible

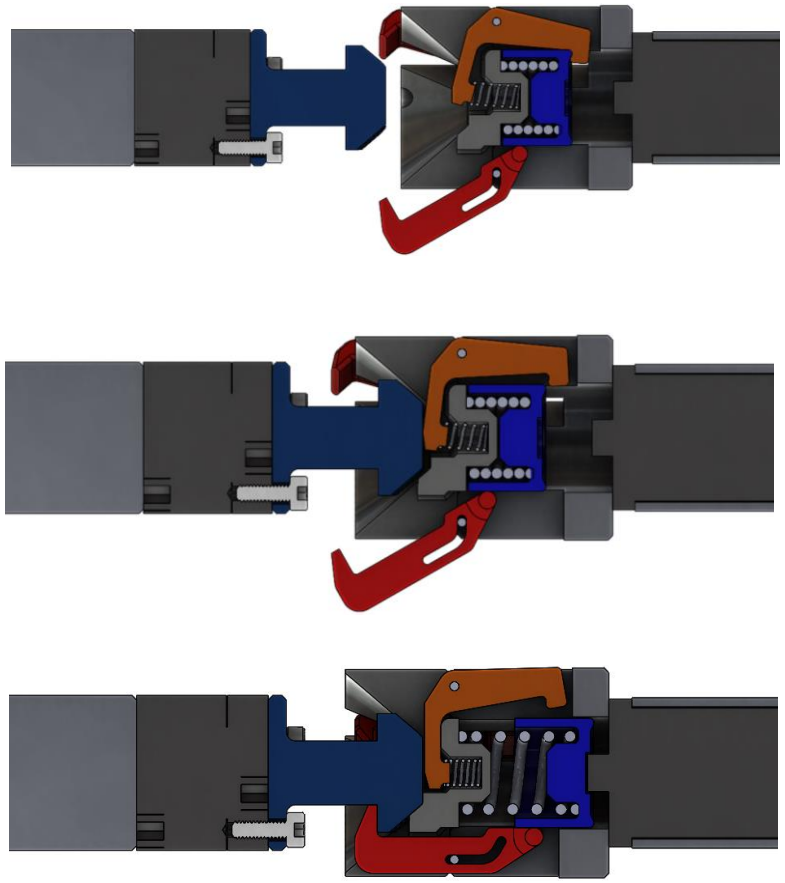

Latching

1. Grapple is in open position as pin approaches during rendezvous

2. Pin makes contact with trigger arm to release spring

3. Spring pulls latching arms in to capture pin

POC: Ryan McCormick (ryan.l.mccormick@jpl.nasa.gov),
Rudranarayan Mukherjee (rudranarayan.m.mukherjee@jpl.nasa.gov)

Docking End Effector Testing

POC: Ryan McCormick (ryan.l.mccormick@jpl.nasa.gov),
Rudranarayan Mukherjee (rudranarayan.m.mukherjee@jpl.nasa.gov)

Example of SmallSat Bus

System	Subsystem	Component	Summary
Attitude Control		Blue Canyon Technologies XACT	Star tracker, reaction wheels, magnetorquers
Propulsion		Vacco Reaction Control Module	Proximity operations
		Vacco AND Micro Propulsion System	Long range rendezvous
Power	Solar Panels	Clyde Space	7W per 3U BOL
	Battery	Clyde Space 3rd Generation	10 – 40 Whr, integrated thermal control
	EPS	Clyde Space 3rd Generation	10 outputs, radiation tolerant components
Onboard Computing		Space Micro Proton200k Lite	900 MFLOPS, 32 GB flash, radiation hardened
Telecommunications	UHF/VHF Antenna	ISIS UHF/VHF Antenna	Omni-directional, 2W output power
	UHF/VHF Transceiver	ISIS UHF/VHF Transceiver	Full duplex, 1.2 kbps uplink/9.6 kbps downlink
	S-Band Antenna	Endurosat S-Band Patch Antenna	8.3 dBi gain, 4W output power
	S-Band Transceiver	ISIS – TXS S-Band Transmitter	2100-2500 MHz, 100 kbps downlink
RPOD Cameras		CPOD	Two IR/one visible camera

- **Available Payload Mass: ≈ 2.5 kg**
- **Available Payload Power: ≈ 20 W**

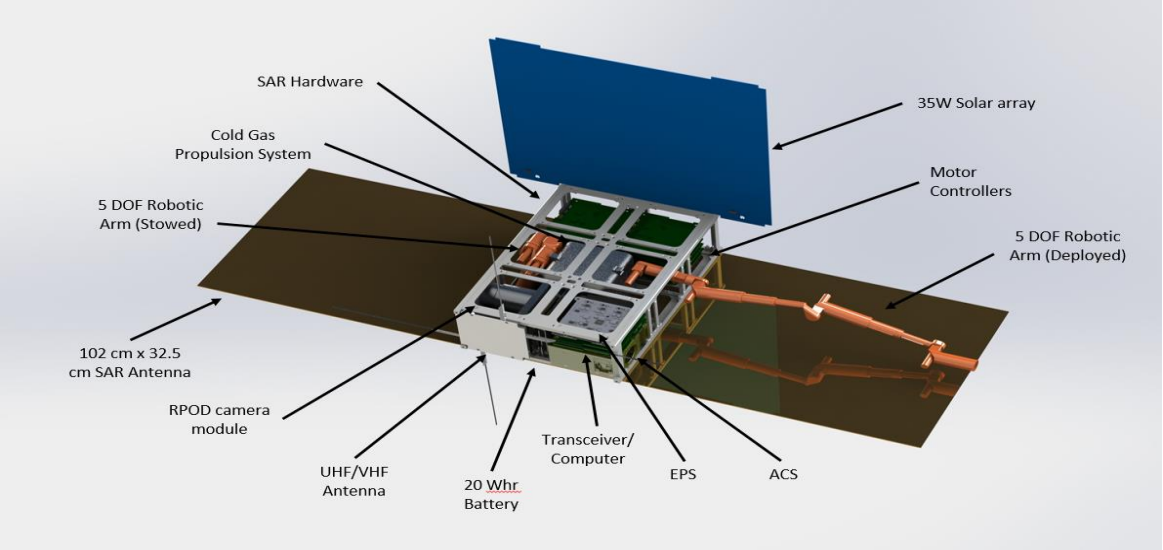

Example of SAR configuration

POC: Ryan McCormick (ryan.l.mccormick@jpl.nasa.gov),
Rudranarayan Mukherjee (rudranarayan.m.mukherjee@jpl.nasa.gov)

Rendezvous and Relative Navigation

- Two phases of relative navigation
  1) ≈ 1 km to 1 m relative distance (GPS and ADN thruster)
  2) 1 m to 1 cm relative distance (proximity sensor and cold gas thruster)
- Assumptions
  - Two 12 kg SmallSats in LEO (1000 km altitude)
  - One chaser (controlled), one target (passive)
  - Linearized Clohessy-Wiltshire equations
  - Sensor noise and actuator uncertainties
  - No attitude control or propellant mass loss
- Linear-quadratic Gaussian (LQG) Control created in Simulink

POC: Ryan McCormick (ryan.l.mccormick@jpl.nasa.gov),
Rudranarayan Mukherjee (rudranarayan.m.mukherjee@jpl.nasa.gov)

Rendezvous (1 km to 1 m)

- GPS and ADN Thrusters
- 170 minutes, final accuracy ≈±50 cm
- Total delta-V ≈3.7 m/s, 0.016 kg propellant mass
  - Delta-V can be traded with convergence speed to save propellant

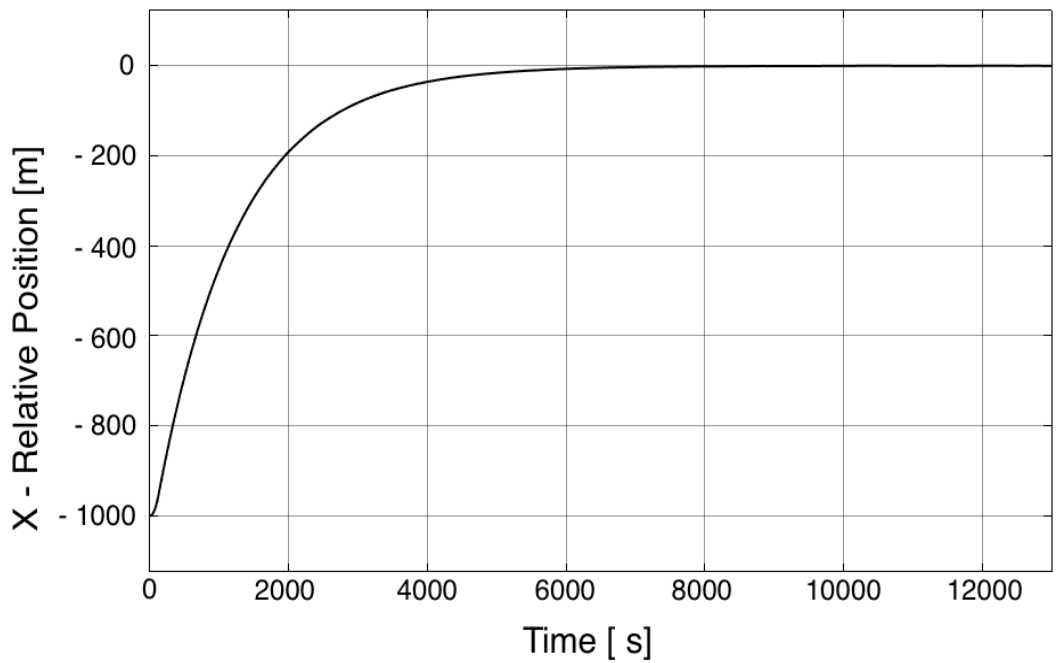

Plot of X-Relative Position vs Time for Long (1 km) Rendezvous. Y-Relative Position plot looks similar.

Rendezvous (1 m to 1 cm)

- Proximity sensor and cold gas thruster
- Starting point [-3m; -3m]
- Stay within ≈± 1 cm around target

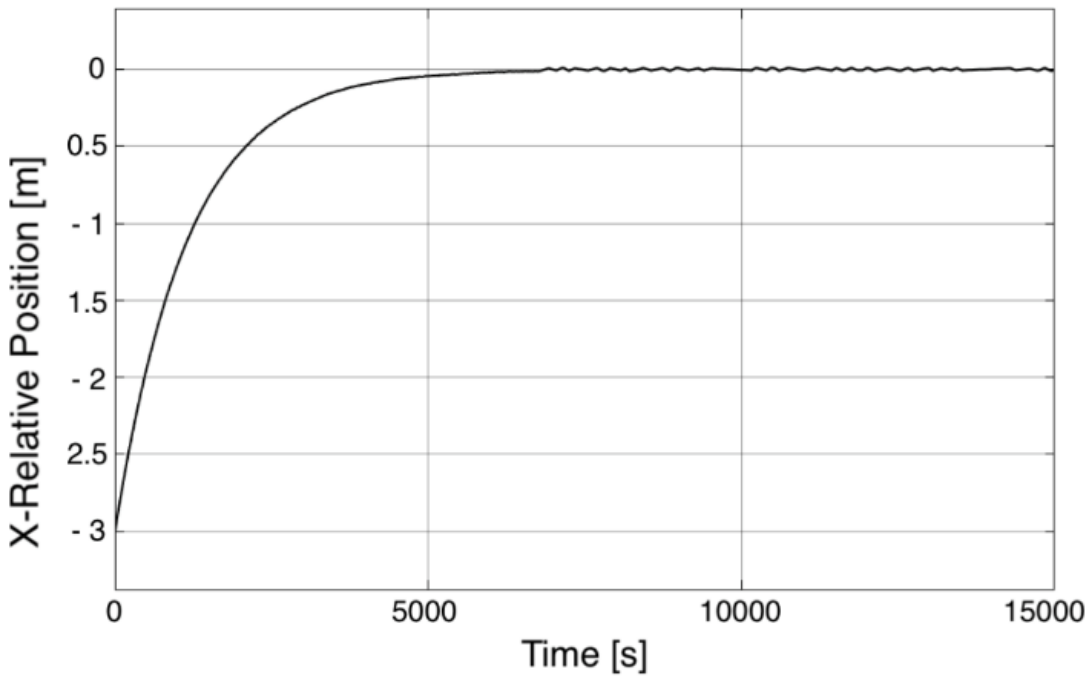

Plot of X-Relative Position vs Time for Close Proximity Rendezvous. Y-Relative Position plot looks similar.

POC: Ryan McCormick (ryan.l.mccormick@jpl.nasa.gov),
Rudranarayan Mukherjee (rudranarayan.m.mukherjee@jpl.nasa.gov)

Summary and Future Work

- Summary
  - Robotic manipulator
    - Designed within CubeSat SWAP constraints
    - Future: Build and test prototype, accommodate launch/space environments
  - Docking end effector
    - Quick latching, small volume, ≈1 cm uncertainty sphere
    - Future: Stress test prototype to identify possible improvements
  - Representative spacecraft bus
    - Utilizing COTS components
    - Future: Mature bus design
  - Rendezvous and relative navigation
    - Models show initial feasibility
    - Future: Improve control design, add accurate probalistic model for sensor noise and actuator disturbance, perform trade analysis for adding more SmallSats

POC: Ryan McCormick (ryan.l.mccormick@jpl.nasa.gov),
Rudranarayan Mukherjee (rudranarayan.m.mukherjee@jpl.nasa.gov)

Jet Propulsion Laboratory
California Institute of Technology

Backup

Application Examples

- Large and scalable:
  - RF apertures
  - Optical apertures
- Interferometry
- In space assembly
  - Tug
  - Construction
- Close proximity formation flying
- Scanning imagers
- “Stare” at fixed point
- Docking to existing satellites to add capability
- Measuring field potentials
  - Magnetic
  - Electric
- Daughter “Helper” Craft

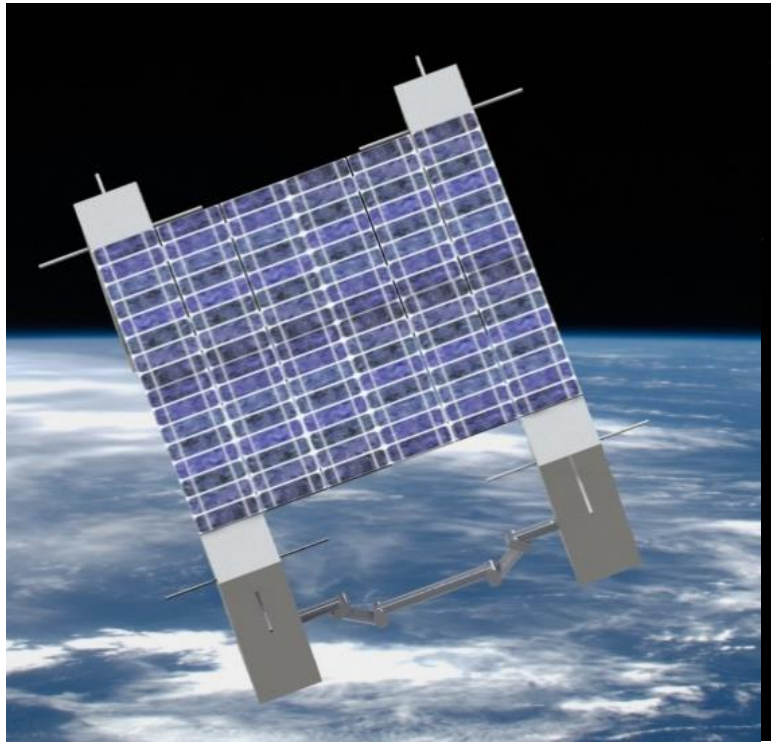

RF Aperture

Optical Aperture

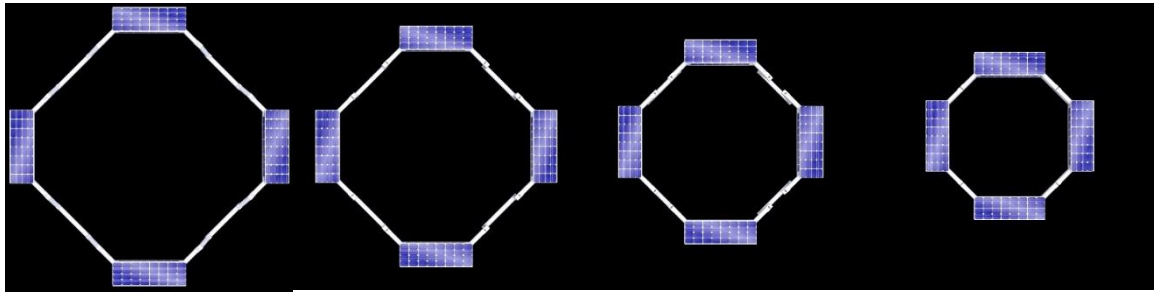

Relative Repositioning for Interferometry

POC: Ryan McCormick (ryan.l.mccormick@jpl.nasa.gov),
Rudranarayan Mukherjee (rudranarayan.m.mukherjee@jpl.nasa.gov)

Holding Brakes (Cont.)

- Cross-Section

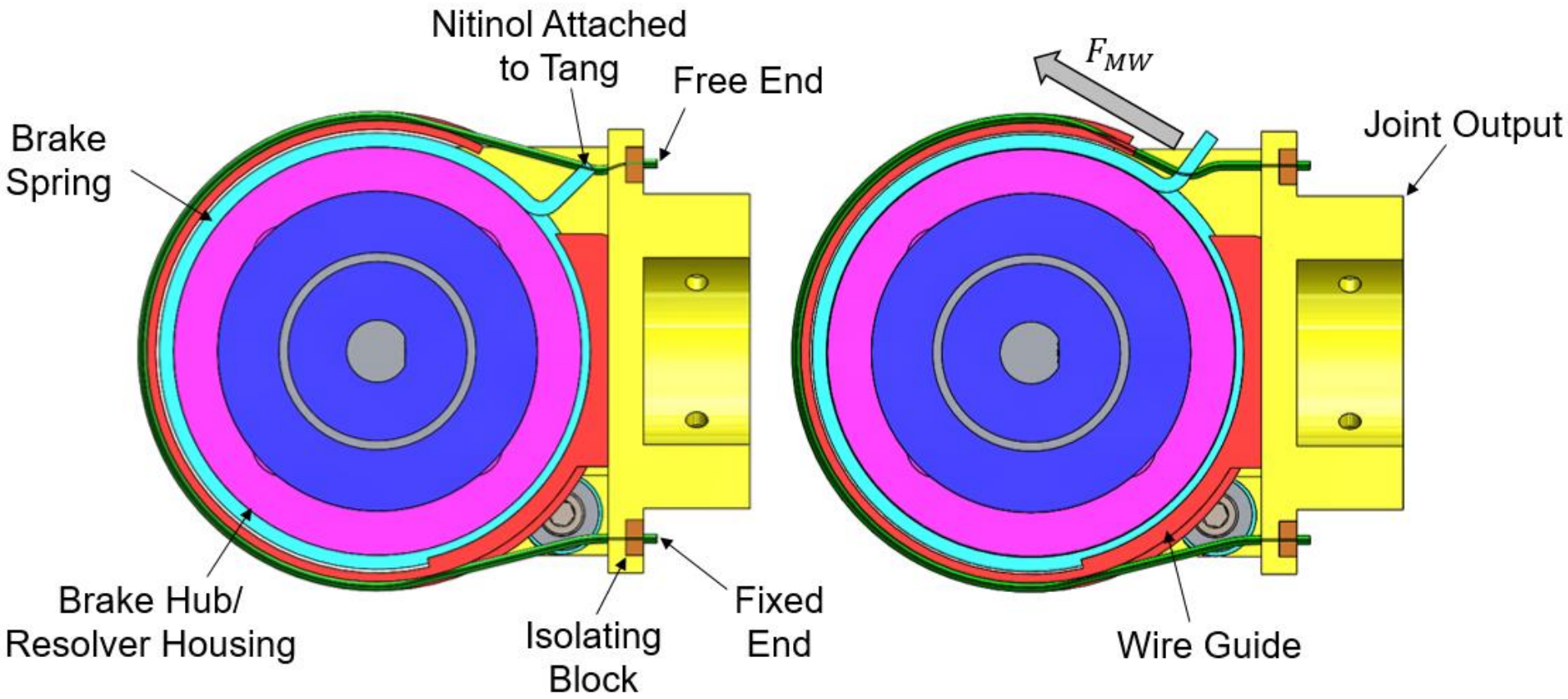

POC: Ryan McCormick (ryan.l.mccormick@jpl.nasa.gov),
Rudranarayan Mukherjee (rudranarayan.m.mukherjee@jpl.nasa.gov)

Mass Budget

Mass Budget					
System	Subsystems	Manufacturer	CBE Mass (kg)	Contingency	MEV Mass (kg)
Structure			**1.000**	**30%**	**1.300**
		ISIS 6U (modified)	1.000	30%	1.300
Propulsion			**3.044**	**10%**	**3.348**
		Vacco Reaction Control Module	1.244	10%	1.368
		Vacco ADN Micro Propulsion System	1.8	10%	1.980
ACS			**0.910**	**8%**	**0.983**
		BCT XACT	0.910	8%	0.983
Telecom			**0.311**	**7%**	**0.330**
	UHF Antenna	ISIS VHF/UHF	0.100	5%	0.105
	UHF Transceiver	ISIS Full Duplex	0.085	5%	0.089
	S-Band Antenna	Endurosat S-Band Patch	0.064	8%	0.069
	S-Band Transceiver	ISIS – TXS S-Band Transmitter	0.062	8%	0.067
Computer			**0.200**	**8%**	**0.216**
		Space Micro Proton 200k Lite	0.200	8%	0.216
Power			**0.844**	**5%**	**0.886**
	EPS	Clyde Space 3rd Gen FlexU	0.148	5%	0.155
	Battery	Clyde Space 20 Whr	0.196	5%	0.206
	Solar Panels	Clyde Space 3U Panels	0.500	5%	0.525
Robotics			**1.200**	**43%**	**1.716**
	Arm 1	JPL	0.600	43%	0.858
	Arm 2	JPL	0.600	43%	0.858
RPOD Cameras			**0.600**	**15%**	**0.690**
		CPOD	0.600	15%	0.690
		Total Mass (kg)	**8.109**	**1.361**	**9.470**

Available Payload Mass	**2.530**

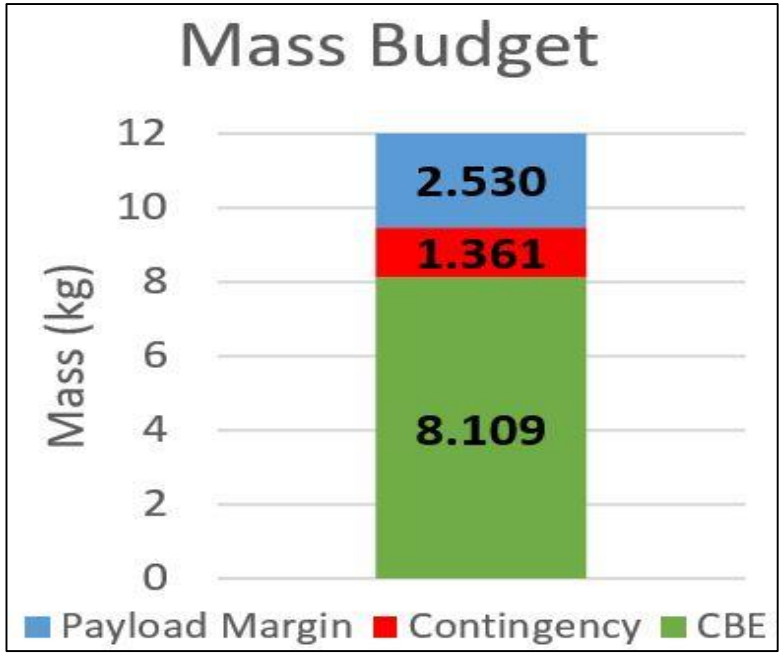

POC: Ryan McCormick (ryan.l.mccormick@jpl.nasa.gov),
Rudranarayan Mukherjee (rudranarayan.m.mukherjee@jpl.nasa.gov)

Power Budget

Power Budget											
System	Subsytems	Manufacturer	Mode 1: Standby Power			Mode 2: Rendezvous Power (W)			Mode 3: SAR Power (W)		
			CBE (W)	Contingency	MEV (W)	CBE (W)	Contingency	MEV (W)	CBE (W)	Contingency	MEV (W)
Propulsion			**0.305**	**10%**	**0.3355**	**20**	**10%**	**22**	**0.305**	**10%**	**0.3355**
		Vacco Reaction Control	0.25			5			0.25		
		Vacco ADN Micro Propulsion	0.055			15			0.055		
ACS			**0.030**	**10%**	**0.033**	**3.230**	**10%**	**3.553**	**3.230**	**10%**	**3.553**
		BCT XACT	0.030			3.230			3.230		
Telecom			**0.450**	**10%**	**0.495**	**0.450**	**10%**	**0.495**	**0.450**	**10%**	**0.495**
	UHF Antenna	ISIS VHF/UHF	0.020			0.020			0.020		
	UHF Transceiver	ISIS Full Duplex	0.200			0.200			0.200		
	S-Band Antenna	Endurosat S-Band Patch	0.030			0.030			0.030		
	S-Band Transceiver	ISIS – TXS S-Band	0.200			0.200			0.200		
Computer			**1.500**	**10%**	**1.650**	**1.500**	**10%**	**1.650**	**1.500**	**10%**	**1.650**
		Space Micro Proton 200k	1.500			1.500			1.500		
Power			**0.500**	**10%**	**0.550**	**0.800**	**10%**	**0.880**	**0.800**	**10%**	**0.880**
	EPS	Clyde Space 3rd Gen FlexU	0.400			0.400			0.400		
	Battery	Clyde Space 20 Whr	0.100			0.400			0.400		
Robotics			**1.000**	**43%**	**1.430**	**14.000**	**43%**	**20.020**	**5.500**	**43%**	**7.865**
	Arm 1	JPL	0.500			14.000			5.000		
	Arm 2	JPL	0.500			0.500			0.500		
RPOD			**0.200**	**20%**	**0.240**	**2.000**	**20%**	**2.400**	**0.200**	**20%**	**0.240**
		CPOD	0.200			2.000			0.200		
		Total Power (W)	**3.985**		**4.734**	**41.980**		**50.998**	**11.985**		**15.019**

Power Generation (BOL)				
System	Number of Units	Manufacturer	Power (W)	Total Power (W)
Solar Panels	**5**	**Clyde Space 3U Panel**	**7**	**35**

Available Payload Power	**19.982**

Power Generation (EOL 5 Year LEO Mission)					
System	Number of Units	Manufacturer	BOL Power (W)	P/P0	Total Power (W)
Solar Panels	**5**	**Clyde Space 3U Panel**	**7**	**0.93**	**32.55**

POC: Ryan McCormick (ryan.l.mccormick@jpl.nasa.gov),
Rudranarayan Mukherjee (rudranarayan.m.mukherjee@jpl.nasa.gov)

Simulink model for LQG Controller

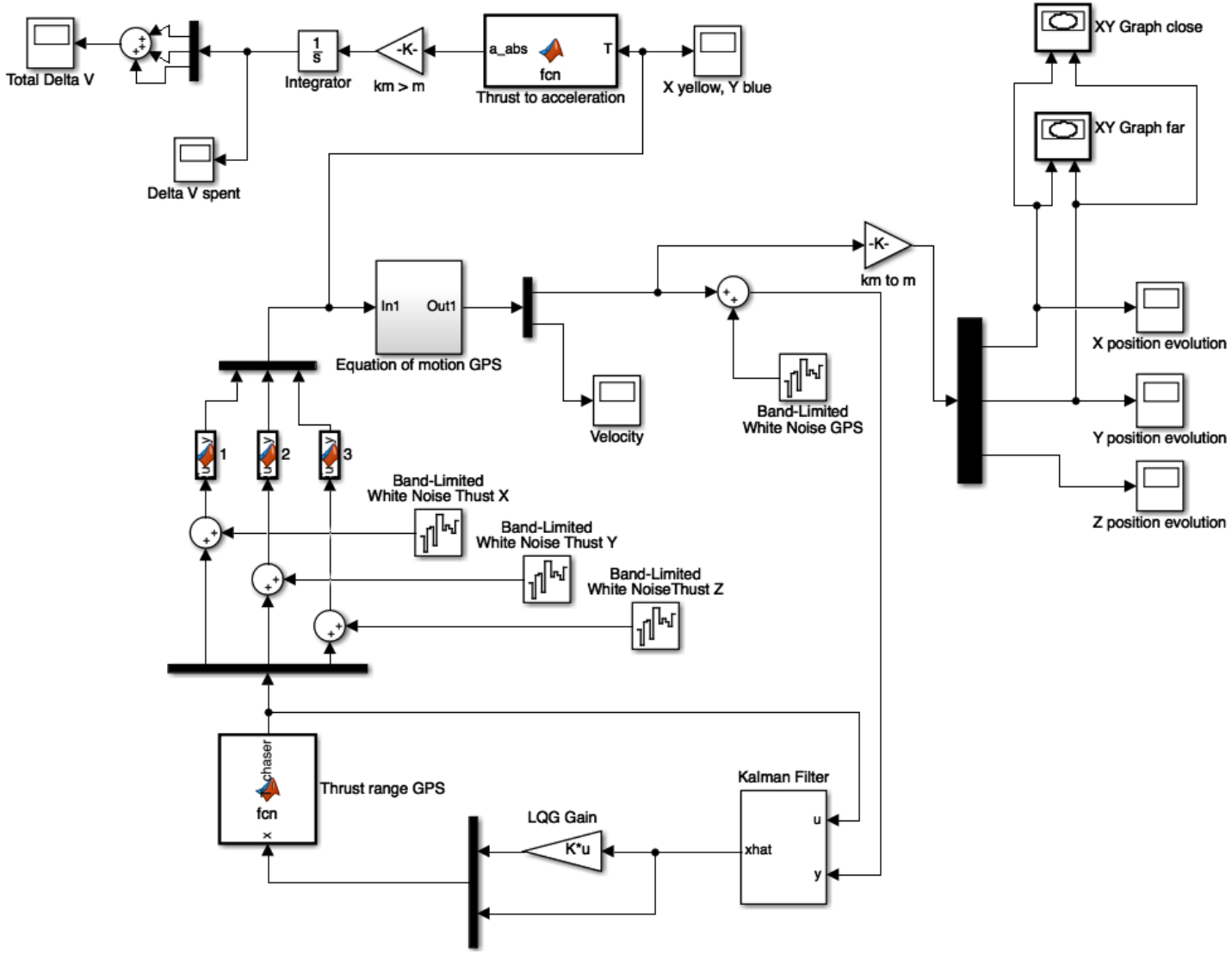

POC: Ryan McCormick (ryan.l.mccormick@jpl.nasa.gov),
Rudranarayan Mukherjee (rudranarayan.m.mukherjee@jpl.nasa.gov)