HabEx Architecture and Instruments

Keith Warfield
HabEx Study Office Manager
Jet Propulsion Laboratory, California Institute of Technology

November 11, 2016

©2016 California Institute of Technology. Government sponsorship acknowledged.

Architecture – Initial Round

- Aperture trade
  - STDT selected 4m unobscured and 6.5m on-axis telescope designs for study
  - Decision based partly on an assessment of science per dollar, partly on an assessment current industry mirror capabilities, and JWST leverage value
- GA instrument trade
  - STDT general astrophysics members identified 6 high-value instruments for evaluation by the whole STDT
  - Discussions within the STDT reduced the instruments for evaluation to two: UV spectrograph and a UV/VIS/NIR camera
  - Both instruments sent to Team X for rough design
    - Team X identified new technologies, liens generated on the flight system and operations, and cost for both candidates
  - STDT will select the best option for integration into the concept design
- L2 assumed as the orbit
  - Earth trailing/leading limits life and starshades must co-launch
  - Earth orbits are unattractive due to thermal and field-of-regard considerations
  - L2 orbit size remains a small trade. Presently assuming a WFIRST-like orbit.

Architecture – Second Phase

- 5 unique architectures (so far) being evaluated for 4m design
  - Additional variations based on extended bandpass (both in the blue and the red)
  - Will repeat for 6.5m when we reach that design
- Using high-level assessments for performance, cost and risk
  - Using Stark's yield analysis (performance), ghosting the CATE (cost), counting new technologies (risk)

TRADE STATEMENT: Recommend a 4m exoplanet direct detection architecture for HabEx study concept development

Description			Architecture Trades				
			1	2	3	4	5
			Starshade Only	Corongraph Only	S & C	2 Starshades	S & 10^{-9}C
Evaluation	***MUSTS***						
		Technical					
	M1	Can search the HZ of XX nearby stars					
	M2	Can spectrally characterize planets from 400nm -1000nm					
	M3	Can spectrally characterize planets to >RXX resolution					
	M4	Operational for 5 years or more					
		Schedule					
	M5	Ready for KDP-A by 2025					
		Cost					
	M6	Total estimated cost will be less than $XXB					
	WANTS (DISCRIMINATORS)	***Weights***					
		Technical					
	W1	Spectrally characterize to XXnm in IR					
	W2	Spectrally characterize to XXnm in UV					
	W3	Minimize number of new technologies					
	W4	Maximize characterization of all planet types					
	W5	Maximize characterization of HZs					
		Schedule					
	W6	Reach TRL 5 at earliest possible date					
		Cost					
	W7	Minimize cost					
Risk Evaluation	***RISKS***						
	R1						
	R2						
	R3						
	OPPORTUNITIES						
	O1						
	O2						

Telescope Trades

- Telescope is unobscured if the coronagraph is in the architecture
- F#
  - Early polarization simulations indicate that F#s less than 2 showing significant contrast degradation
  - 2.5 meeting contrast performance with Exo-C Lyot coronagraph design
  - Slower telescopes not desirable due to mass, cost, volume
- Mirror Coatings
  - Hubble-like Al out performed Ag for coronagraph polarization/contrast
  - Newer UV coatings need to be evaluated for polarization
- Mirror Material
  - Early look at materials favored Zerodur due to extended low-CTE temperature range.
  - Additional data on ULE provided by L. Feinberg. Will be evaluated before a final recommendation.

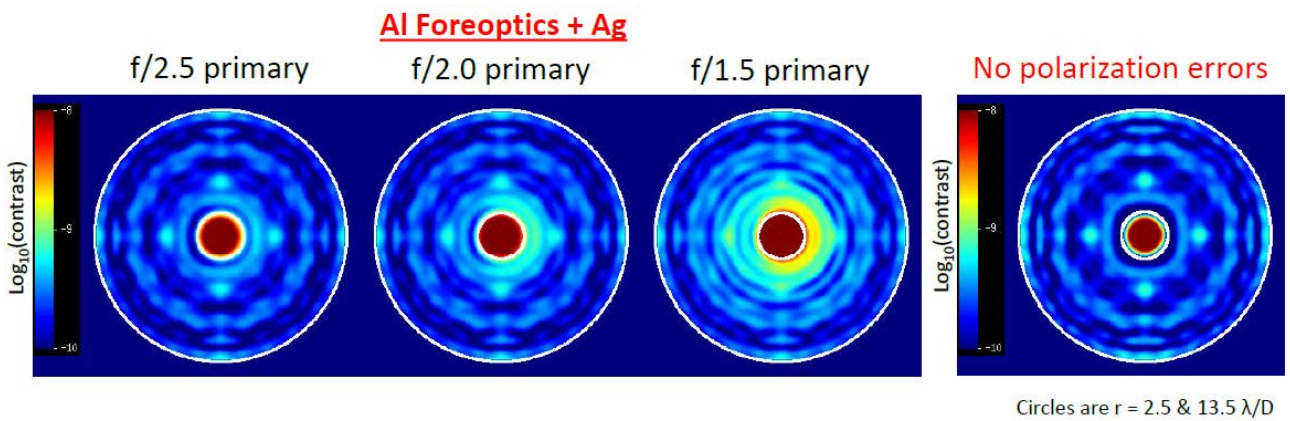

Graphic from presentation by J. Krist and S. Martin, *Impact of Polarization Aberrations, including Cross-Polarization Terms, on the HabEx Coronagraph*, October 26, 2016

Starshade Trades

- Size
  - Currently working starshade sizing which is a function of bandpass and IWA
  - Starshade must fit in 5m fairing to allow second (or follow-on) launches
  - Minimizing dry mass will extend the delta-V and improve yield
- Deployment Method
  - Will also evaluate NGAS and JPL deployment methods for use in the 4m and 6.5m concepts
    - Overall concept cost and technical readiness will be the criteria

Coronagraph

- Early simulations with a Vector Vortex charge 6 looks promising
  - Less sensitive to wave front error than other coronagraph architectures
  - Contrast < 10^{-10} from IWA (2.4 λ/D) to OWA for F# 2.5 and 2.0 telescopes
    - 4m unobscured telescope design with HST-like aluminum coating

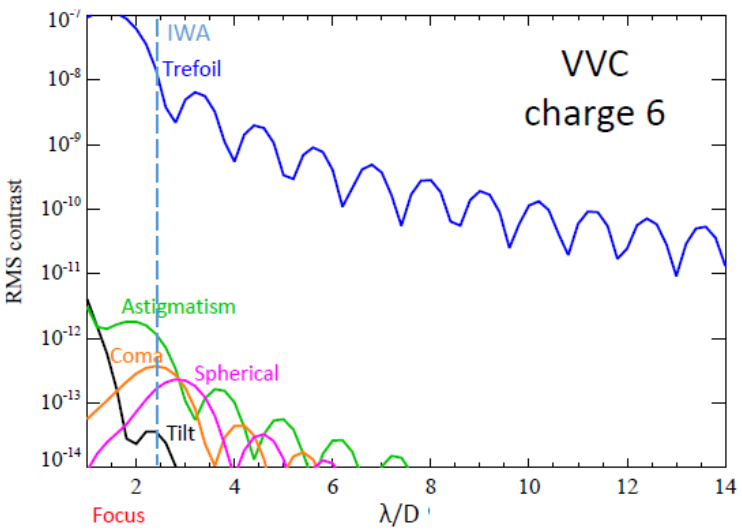

- Plan for other performance simulations
  - Will develop and evaluate HLC and PIAA designs optimized for the 4m
  - Results of the current assessment of coronagraphs for segmented telescopes will guide the study team in 6.5m telescope coronagraph choices
- Decision on placeholder then final coronagraph
  - Current study plan assumes a placeholder coronagraph for the interim report
  - Final decision on the coronagraph is planned for after the interim report
  - Decision will likely be based on a trade of expected performance vs. risk

Graphic from presentation by J. Krist and S. Martin, *Impact of Polarization Aberrations, including Cross-Polarization Terms, on the HabEx Coronagraph*, October 26, 2016

Team X Results – UV Spectrograph

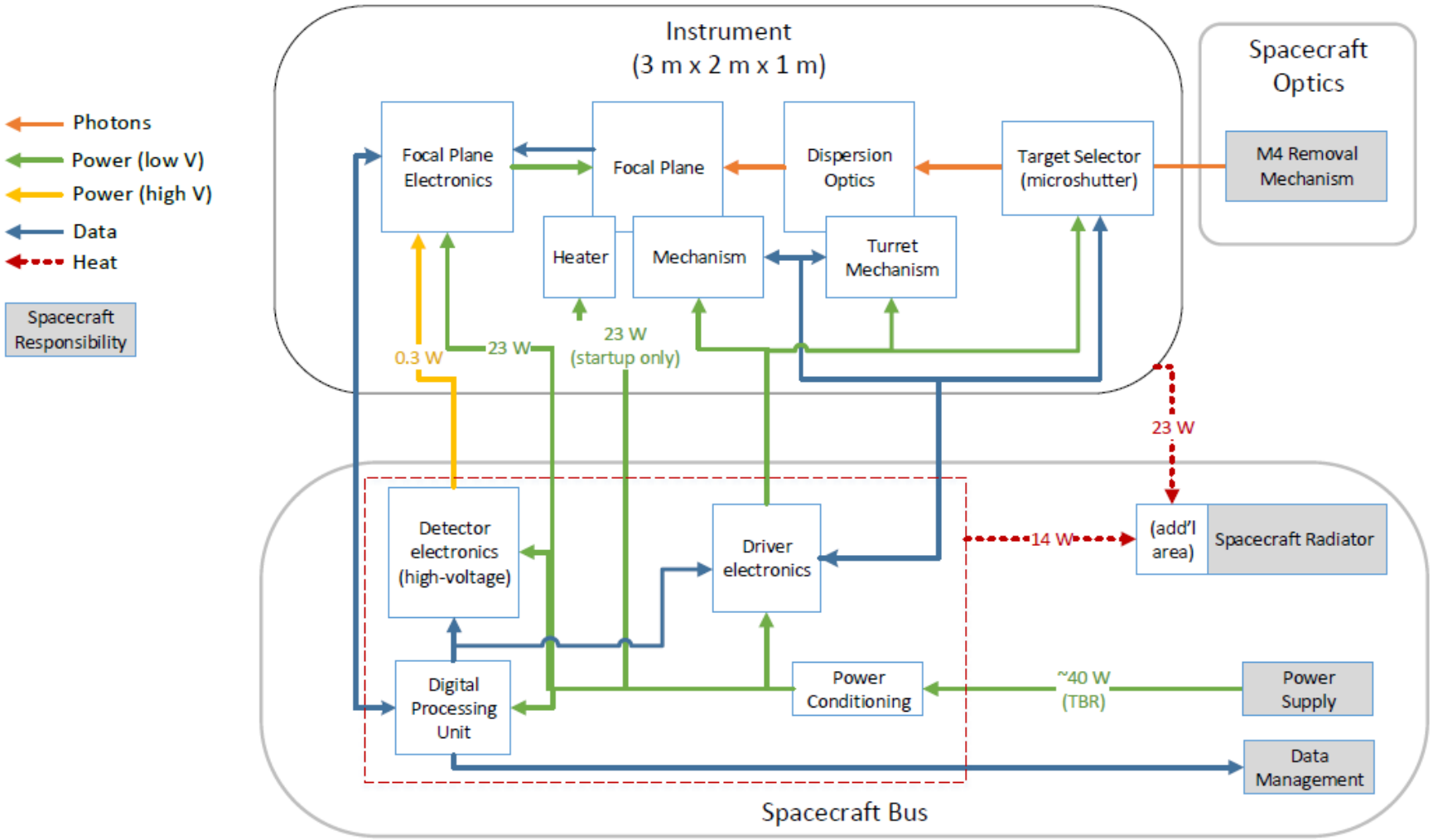

Schematic Block Diagram w/ Interfaces

- Block diagram for the dual-beam Low Resolution Imaging Spectrometer (LRIS) on the Keck telescope.
- LRIS has blue and red channels, split by a dichroic, with an optional slitmask placed early in the light path.
- HabEx Workhorse Camera would be similar.Rather than a slitmask, micro-shutter array (as per NIRSPEC on JWST).

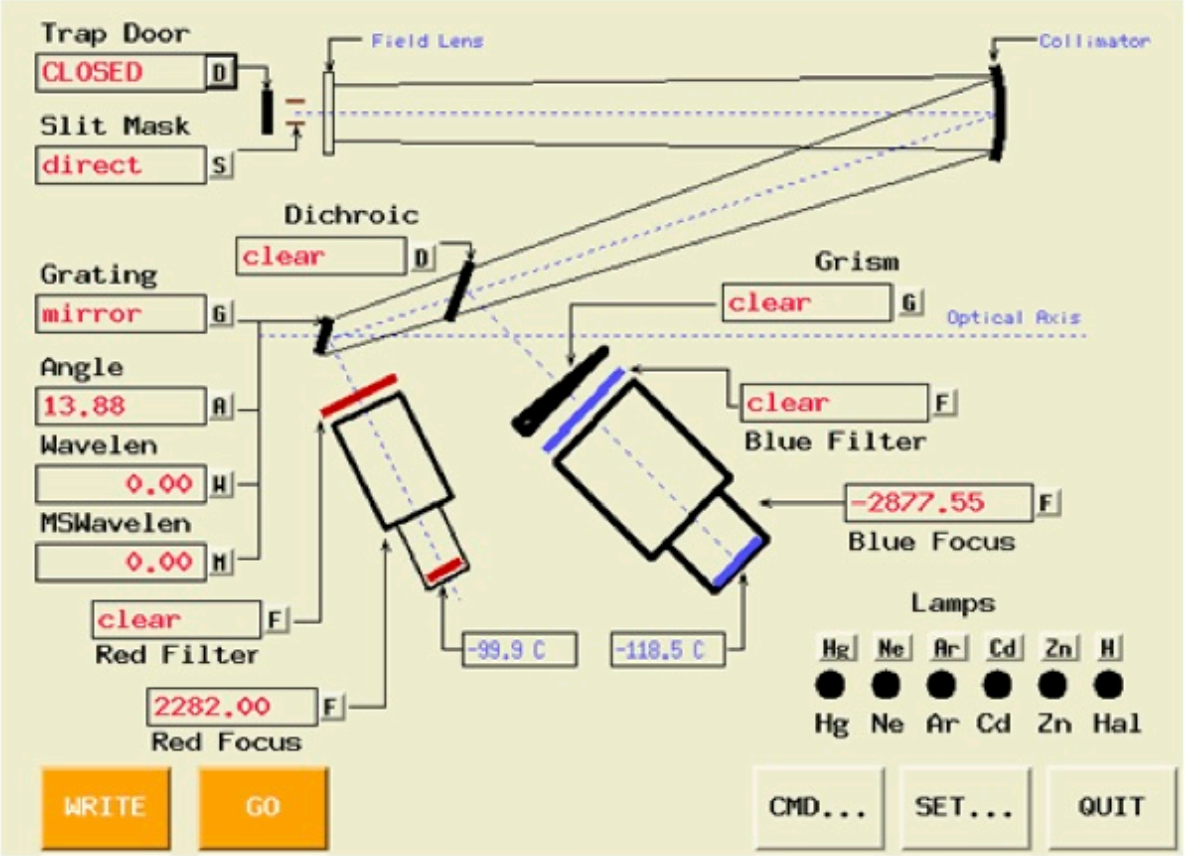

HABEX PLAN AND SCHEDULE

HabEx Study Plan

- Plan is currently in flux due to addition of second concept
  - Re-plan will occur before the end of the calendar year
- Progress
  - Settled telescope aperture question
  - Determined the general astrophysics instrument candidates
  - Settled 4m telescope F#
  - Completed first-cut designs on the two general astrophysics instruments
- Key Future Tasks
  - Beginning 4m architecture trades now. Settle 4m architecture at March STDT meeting.
  - 4m telescope detail design will run until about January.
  - STDT will decide on the general astrophysics instrument hopefully by EOY.
  - Starshade sizing (and bandpass and IWA) will be settled by January.
  - Team X mission session will happen after architecture is settled.
  - Structural and thermal analyses of both the starshade and telescope spacecraft will occur in the spring
  - 6.5m architecture trade will begin at the next face-to-face meeting and will be finalized by the spring meeting.

HabEx: Habitable Exoplanet Imaging Mission Study

10/30/16

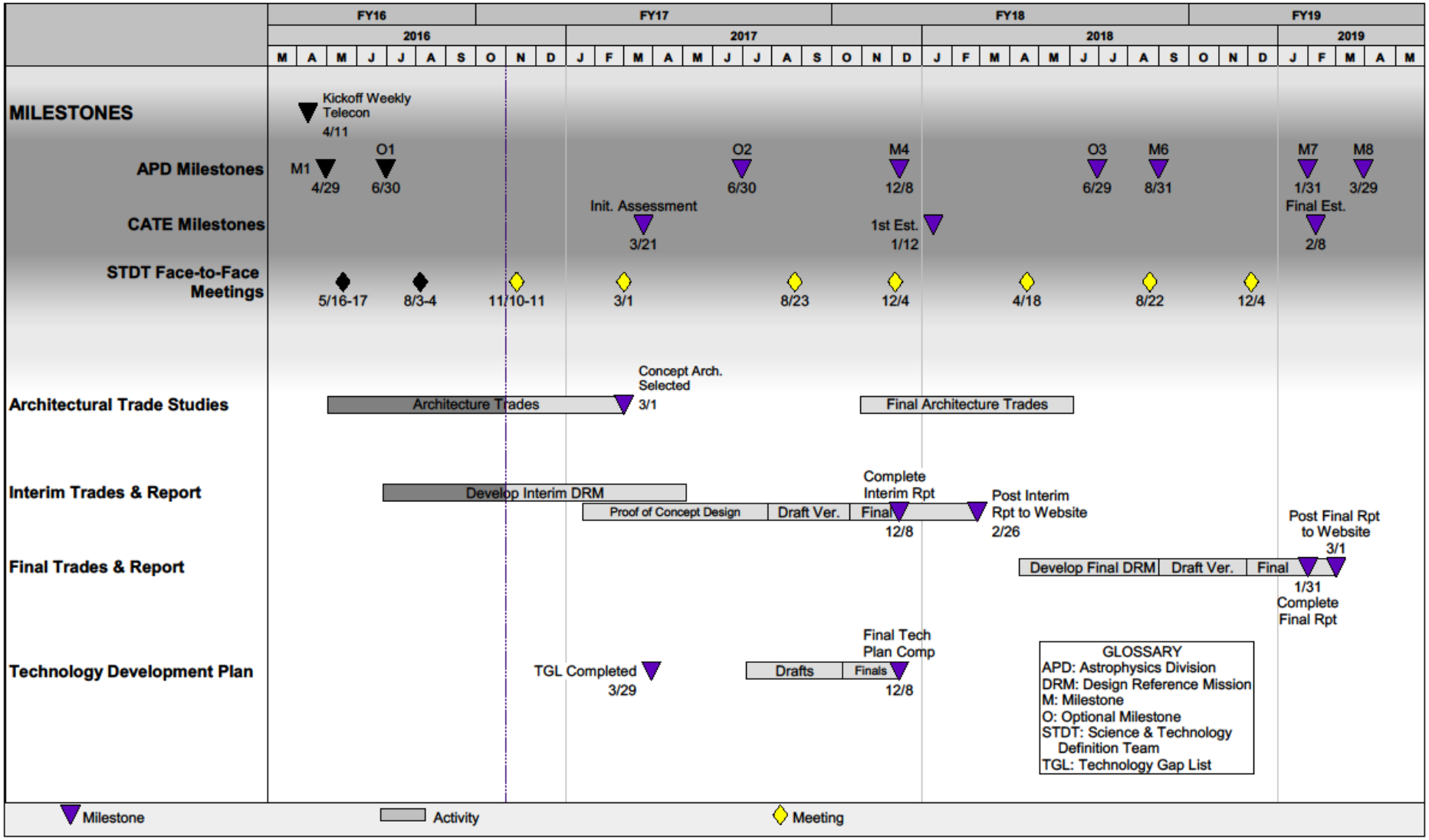

TEAM X PRELIMINARY RESULTS

Purpose of the Team X GA Studies

- Complete a 1st cut design of each option
  - Optics layout, block diagram, MEL, 1st pass configuration
  - Some work after Team X may be needed to make adjustments to the optics and configuration when integrated with the telescope and flight system
- Determine cost, required new technologies, other risks, and requirements imposed on flight system or operations
  - Input to the STDT for consideration of final GA instrument selection
- Instrument cost only estimated
  - Does not include costs for requirements imposed on flight system/operations
  - Other WBS costs that are derived from instrument costs are not included
    - …but can assume that they will be impacted proportionately to the instrument costs
- <u>These are very preliminary results!</u>
  - The reports are due in a couple of weeks.

TEAM X RESULTS - UV SPECTROGRAPH

UV Spectrograph Requirements

Systems
Requirements & Goals

- **Spectral Range: 100-350 nm**
- **Spectral Resolution: 60k**

- **Minimize number of reflections -> maximize throughput**
- **Minimize impact on HabEX S/C and main instrument**
  - But, can impose mild back-flowing requirements
- **If reasonable, enable multi-object imaging**

Sub-Program	Mode	FoV	Passband	Resolution	Aperture
QSOs	Spectroscopy		92-115nm +	R >20,000	4m+
Census	Spectroscopy		92-310nm	R > 40,000	6-8m
AGNs	Spectroscopy	1"	115-320nm	R=40,000	6m
IGM/CGM Emission	Spectroscopy	4x4', 20x20'	125-320nm	R=1,000-5,000	4m+
IGM Metals	Spectroscopy	10'	190-310nm	R~60,000	4m
MC Survey	Spectroscopy		100-250nm	R>30,000	4m
Massive Stars	Spectroscopy		100-200nm	R~40	4m
FUV Diagnostics	Spectroscopy		92-350nm	R~30,000	4m+

UV Spectrograph Requirements

Systems
Assumptions

- **Assume MgF2/LiF/Al coating**

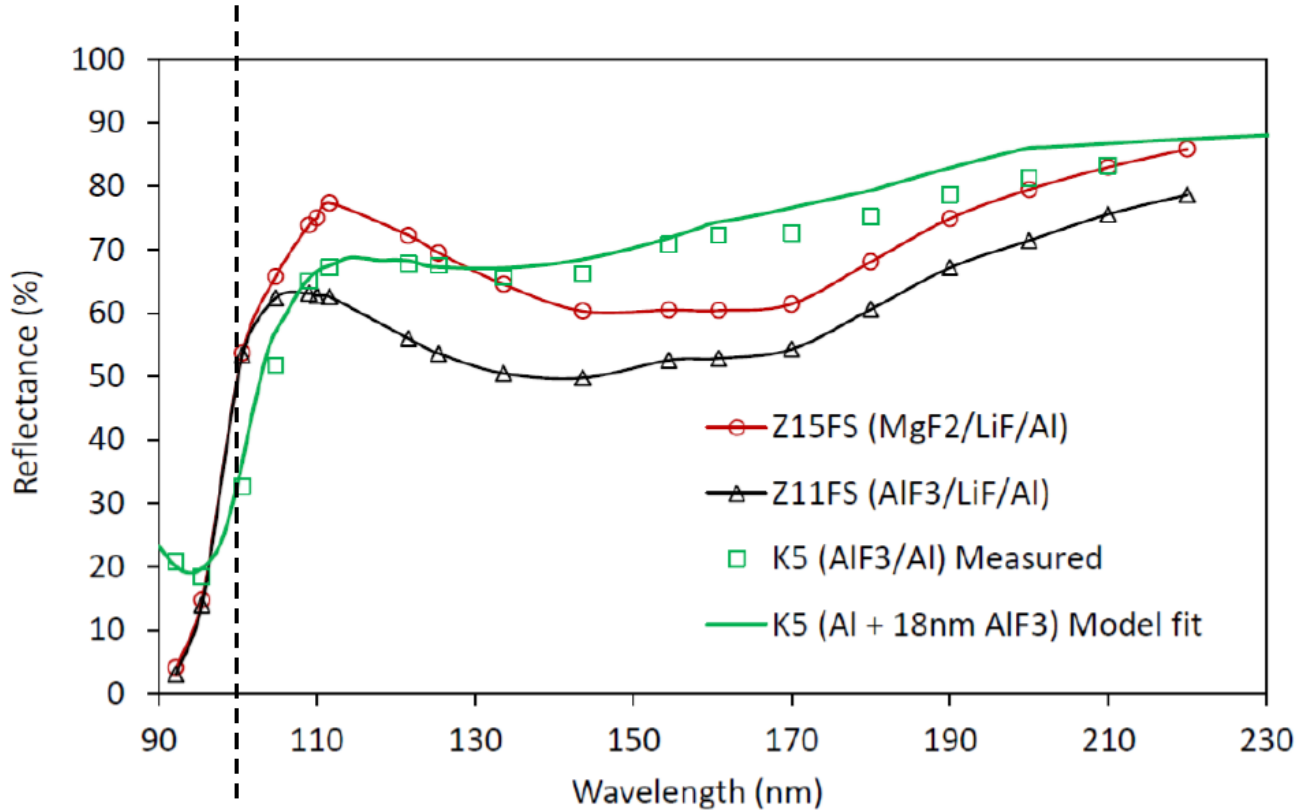

"Aluminum Mirror Coatings for UVOIR Telescope Optics including the Far UV" Kunjithaptham Balasubramanian et al. 2015

Team X Results – UV Spectrograph

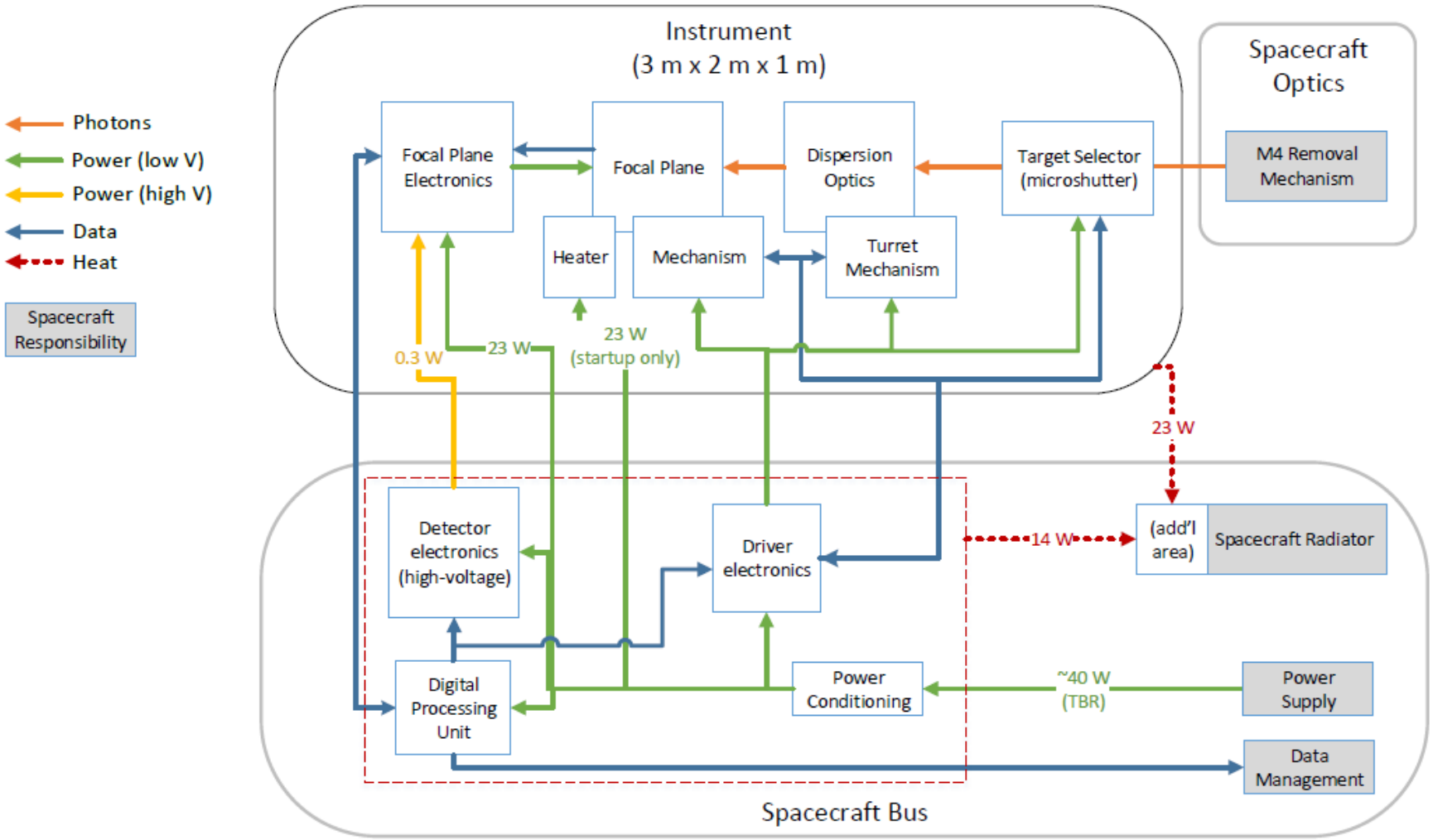

Team X Results – UV Spectrograph

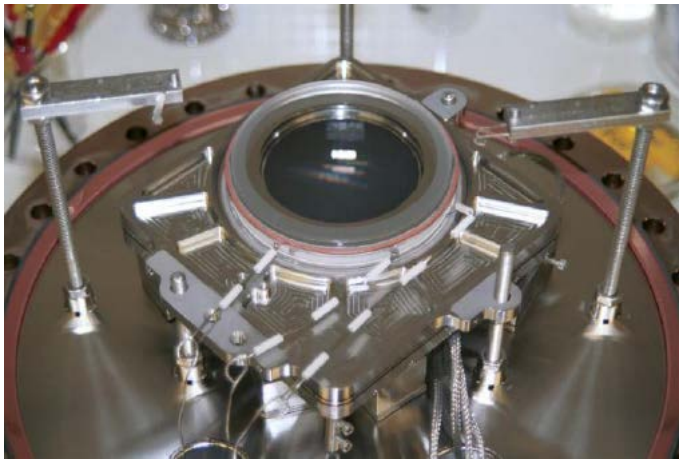

MCPs on GALEX[1]

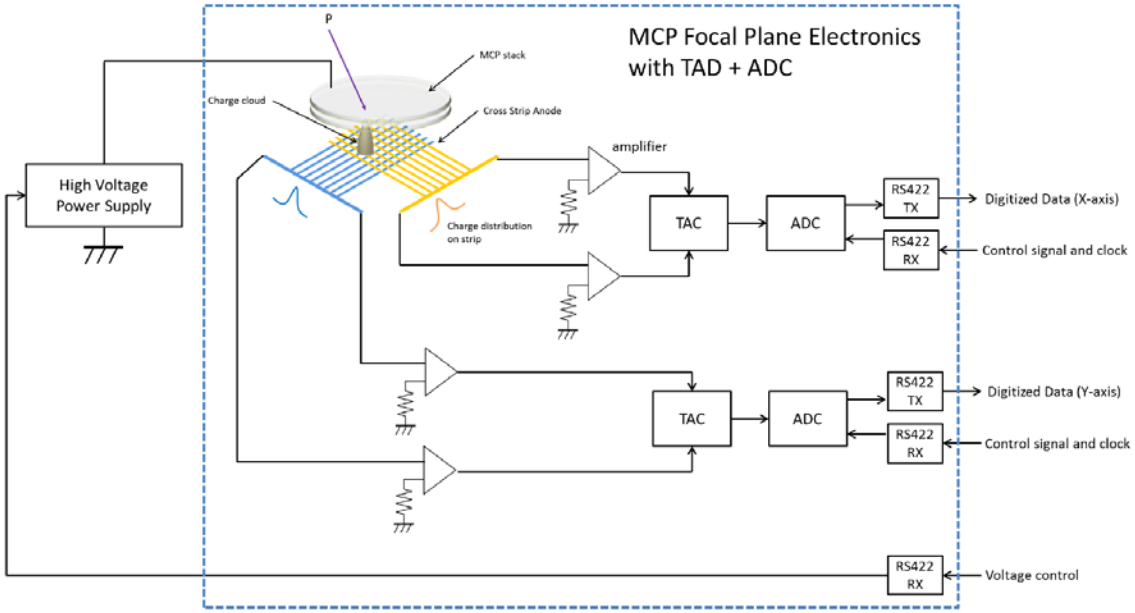

Measure pulse arrive time difference to obtain position of photons

1 – GALEX Detector Flight Operations Guide GAL-CIT-329v6b

Team X UV Spectrograph Results

Systems
System Summary

Preliminary

Subsystem	Mass				Power			
	CBE	cont.	%cont.	MEV	CBE	cont.	%cont.	MEV
Optics	1.000	0.300	30%	1.300	0.000	0.000	30%	0.000
Detectors	0.010	0.003	30%	0.013	0.010	0.003	30%	0.013
Electronics	11.500	3.450	30%	14.950	37.500	11.250	30%	48.750
Mechanical	140.500	42.150	30%	182.650	0.000	0.000	30%	0.000
Thermal	3.997	1.199	30%	5.196	23.000	6.900	30%	29.900
Total	157.007	47.102	30%	204.109	60.510	18.153	30%	78.663

- **Rowland Circle design skews mass toward mechanical structure**
- **Some components are physically housed on/in spacecraft bus, but mass/power are carried by instrument (see block diagram)**
  - High voltage detector electronics
  - Digital processing unit
  - Mechanism driver electronics
  - Power conditioning

TEAM X RESULTS – UV/VIS/NIR CAMERA

Camera Study Requirements

- Flight: 2030s
- Orbital Regime: Earth Sun L2
- Imager ("HabEx Workhorse Camera")
  - 2 channel – UV/optical and near-IR – with a suite of filters.
- Spectrometer ("HabEx UV Instrument"; see 1817 Study Report)
  - Slit spectroscopy
  - A micro-shutter array (as per NIRSpec on JWST). Again, covering UV, optical, and near-IR wavelengths.
- Spectral Range: 150-2000 nm
  - Diffraction limited at 400 nm
- Spectral Resolution:
  - Moderate resolution spectroscopy, R~2000
- FOV: 3 x 3 arcminute

Camera Operational Description

- Observational Scenarios
  - Typical exposure ~10 min
  - Typically used for 1 hr to 100 hr Guest Observer (GO) programs studying a range of targets, from deep fields to distant galaxy clusters to Pluto, as per Hubble, Spitzer, JWST, etc.
- Instrument Modes
  - Imaging with a suite of filters. Calibration requirements similar to Hubble/Spitzer/JWST.
  - Spectroscopy, both as slitless grism and slit/micro-shutter.
  - No on-board processing/event detection needs, autonomy, commanding capabilities, etc.

Schematic Block Diagram w/ Interfaces

- Block diagram for the dual-beam Low Resolution Imaging Spectrometer (LRIS) on the Keck telescope.
- LRIS has blue and red channels, split by a dichroic, with an optional slitmask placed early in the light path.
- HabEx Workhorse Camera would be similar.Rather than a slitmask, micro-shutter array (as per NIRSPEC on JWST).

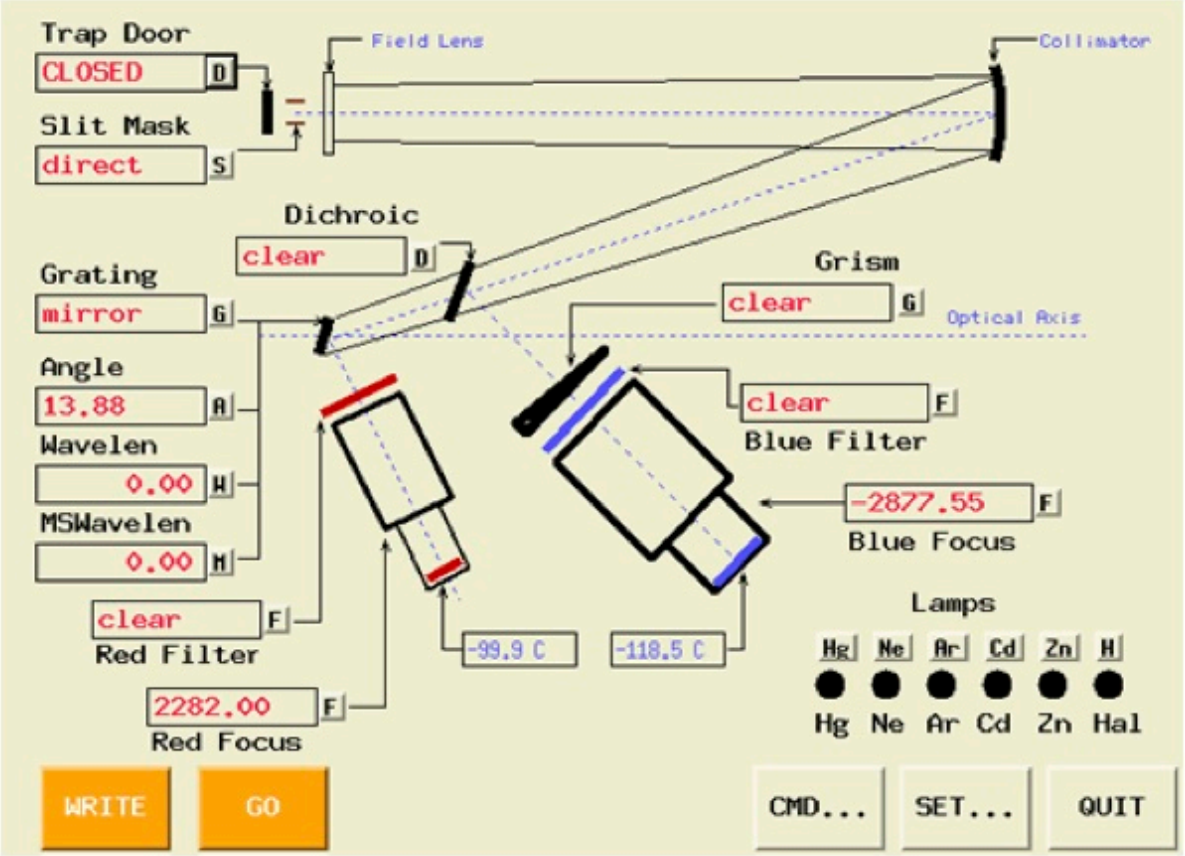

Focal Planes & Detectors

- Dual focal planes
  - 1x Teledyne H4RG-10 (4k x 4k) for IR
  - 1x Teledyne Sidecar
  - 4x e2v CCD203-82 (4k x 4k) for UV

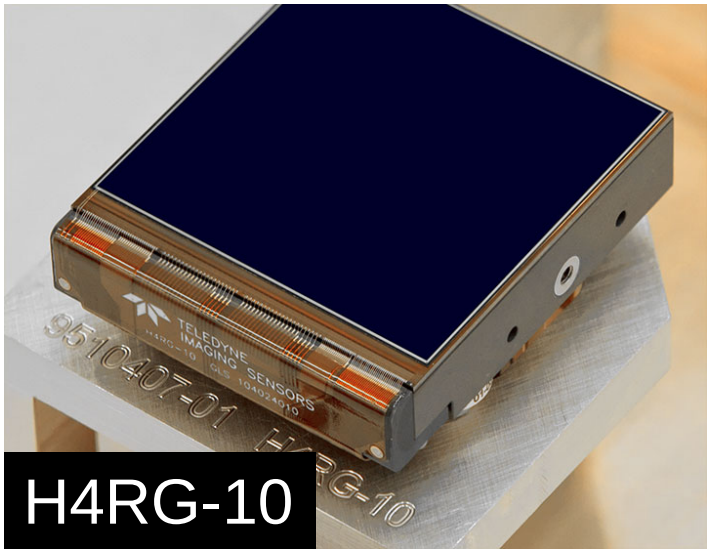

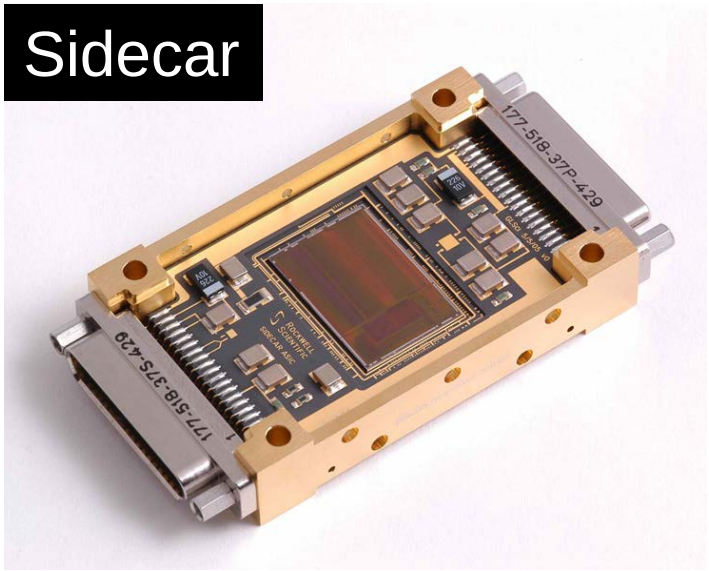

Mass and Power Parameters - CAMERA

Inputs

This document has NOT been reviewed for export control. Not for distribution or access to foreign persons.

Instrument Name	HabEx Camera Instrument
Costs in $K FY	2017
Instrument Type	Optical
Environment	Earth Orbiting
Flagship Mission?	Yes

	Minimum	Most Likely	Maximum
Max Power:		106.0 W	
Total Mass		111.6 kg	
Electronics Mass		14.6 kg	
Optics Mass		23.4 kg	
Detector Mass		1.7 kg	
Thermal Mass		11.5 kg	

Dewar/Cryocooler/ActiveCool	FALSE
Detector Type	CCD Detector

Copy Inputs to Search Engine

Copy Inputs to System Tool

Go to Search Engine

Go to System Tool

Monte Carlo # Iterations:	1000
Automatic Monte Carlo	On
NICM Help	Off

NICM VII Rev2, February 2016

Templ ate

Instrument Preliminary Result Comparison

	UV Spectrograph	Camera
Cost	$118M*	$99M*
Required New Technologies	• 100nm UV Coating • Possibly micro-shutter array	• Possibly micro-shutter array
Risks	• Same as technologies + • Diffraction limited telescope at 350nm a challenge	• Same as technologies • (May have more risks in final report)
Liens on FS/Ops	• 100nm UV coating on telescope • Flip mirror in optical train • Diffraction limited telescope at 350nm • Coronagraph cannot operate at same time	• Some coordination in operations needed with the coronagraph

* Cost represents instrument development only. Other estimate costs based on instrument costs not included. Liens on flight system or operations not included. Technology development costs not included. The cost information contained in this document is of a budgetary and planning nature and is intended for informational purposes only. It does not constitute a commitment on the part of JPL and/or Caltech.