Cassini Attitude Control Hardware Photo Overview

Todd Brown
Jet Propulsion Laboratory, California Institute of Technology

10-24-16

Overview

- This presentation contains photos of the various Cassini AACS (attitude control) hardware components which are not familiar to those outside the AACS team

CASSINI

Attitude and Articulation Control Subsystem

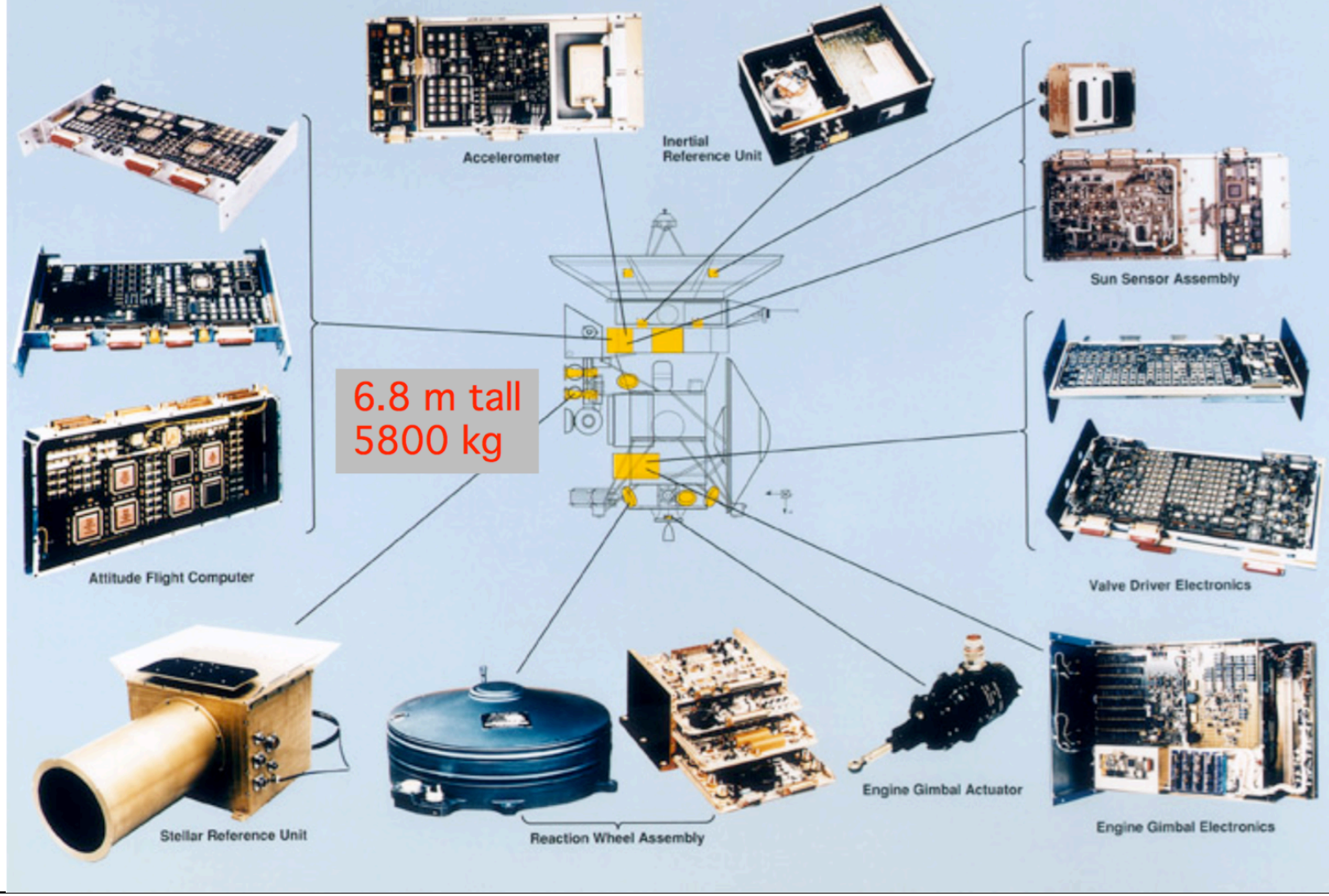

External view of
Reaction Wheel Unit

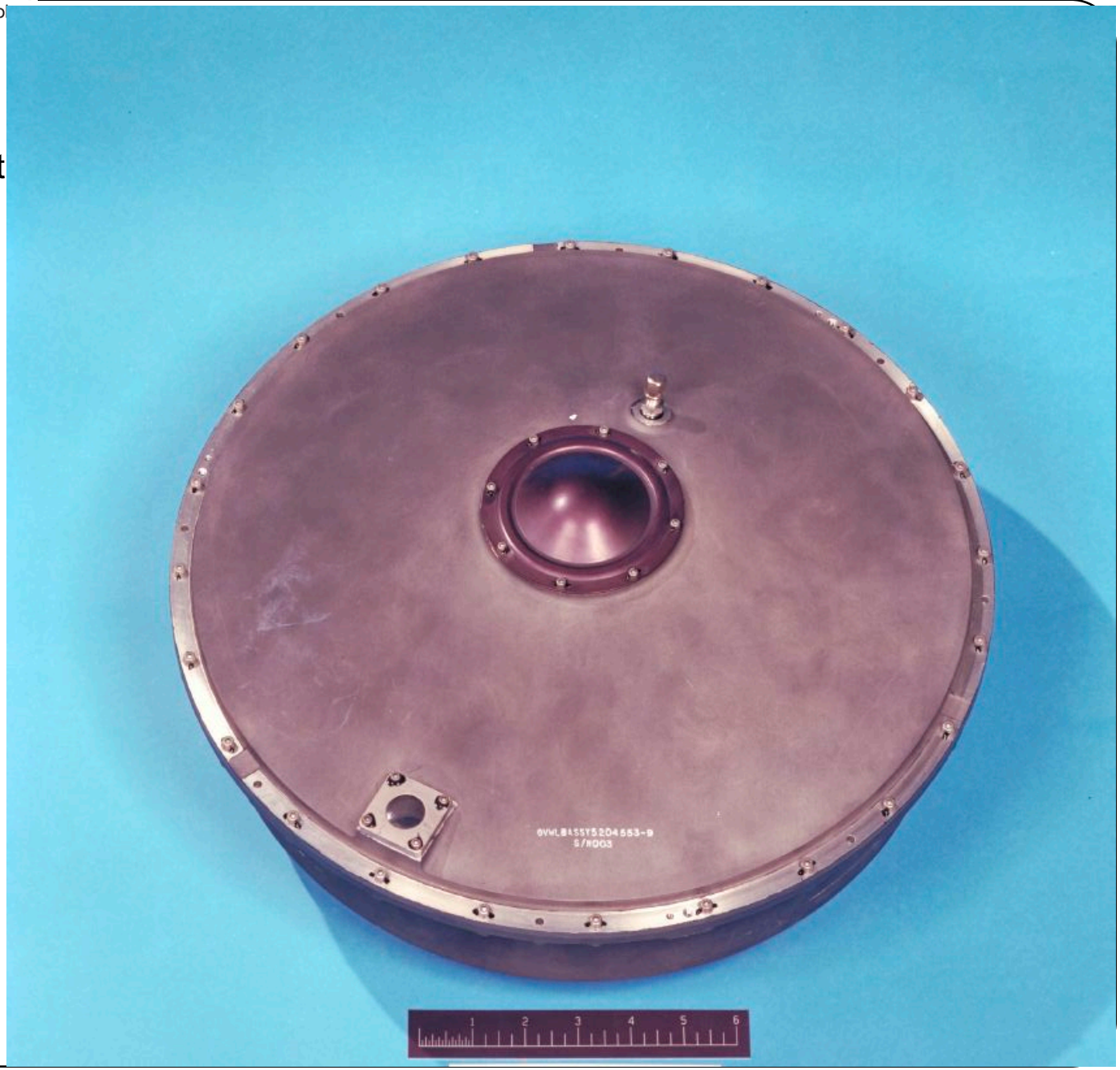

Reaction Wheel flywheel

Reaction Wheel flywheel

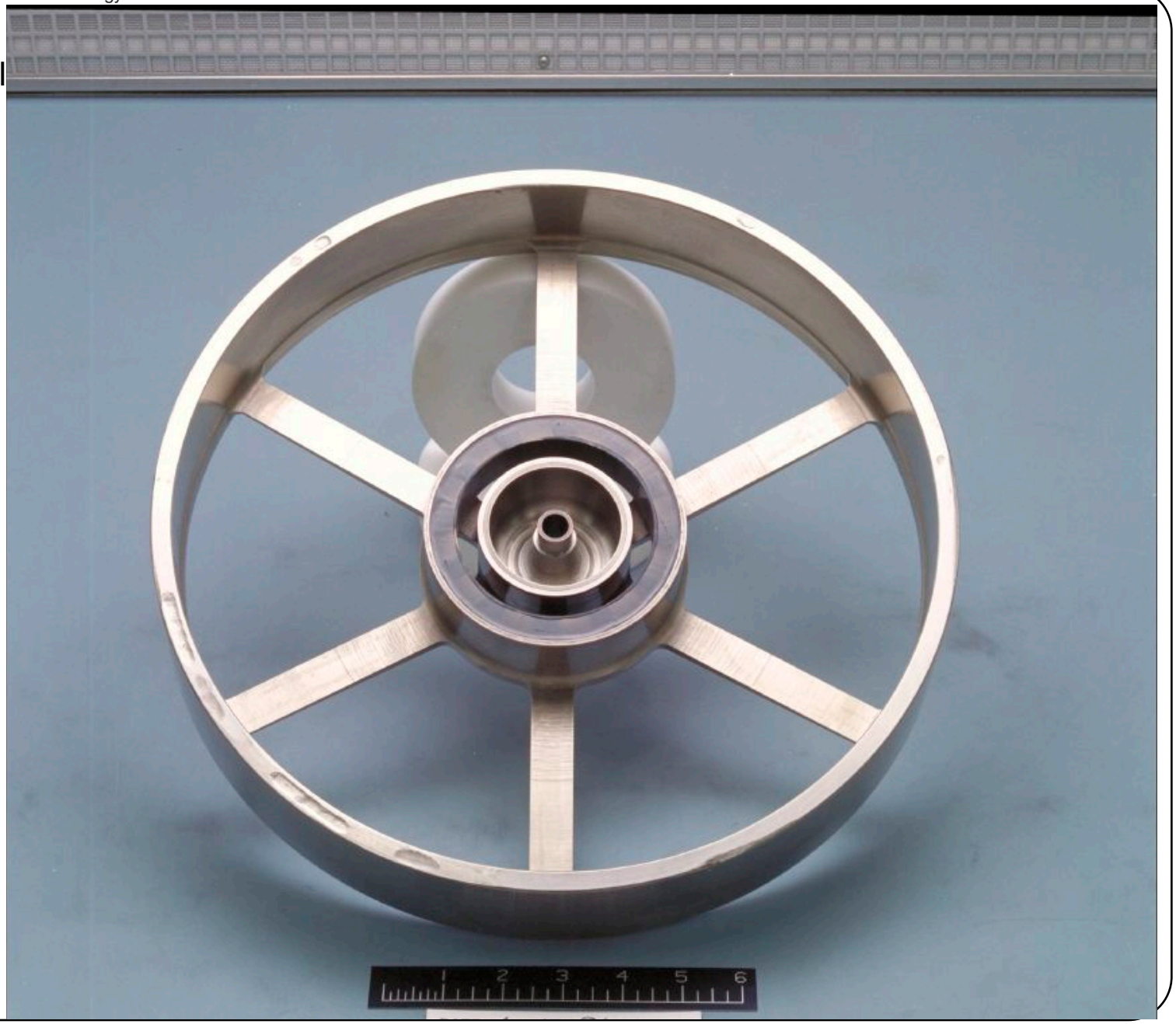

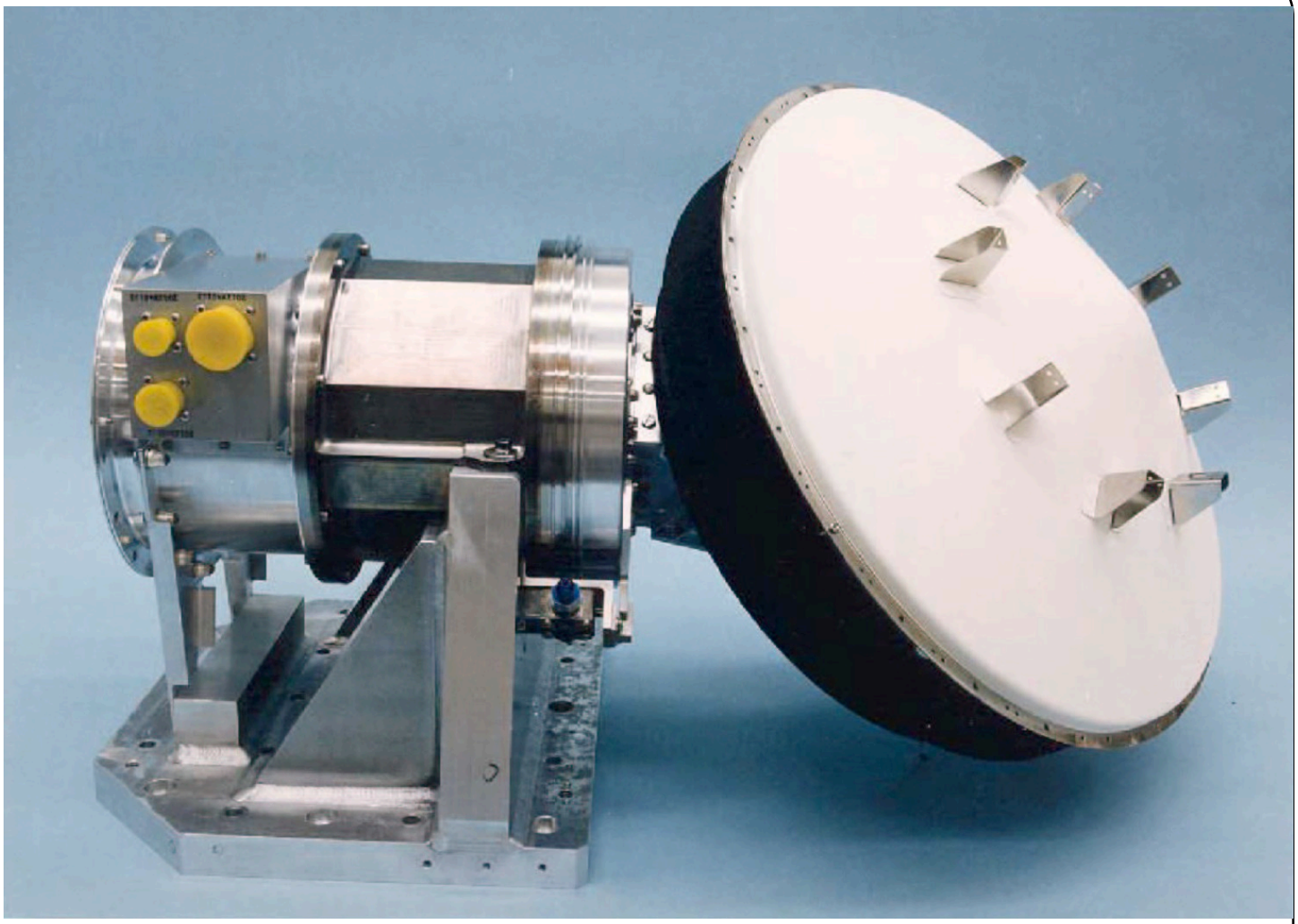

Reaction Wheel 4 (RWA4) with Articulated Reaction Wheel Mechanism (ARWM)

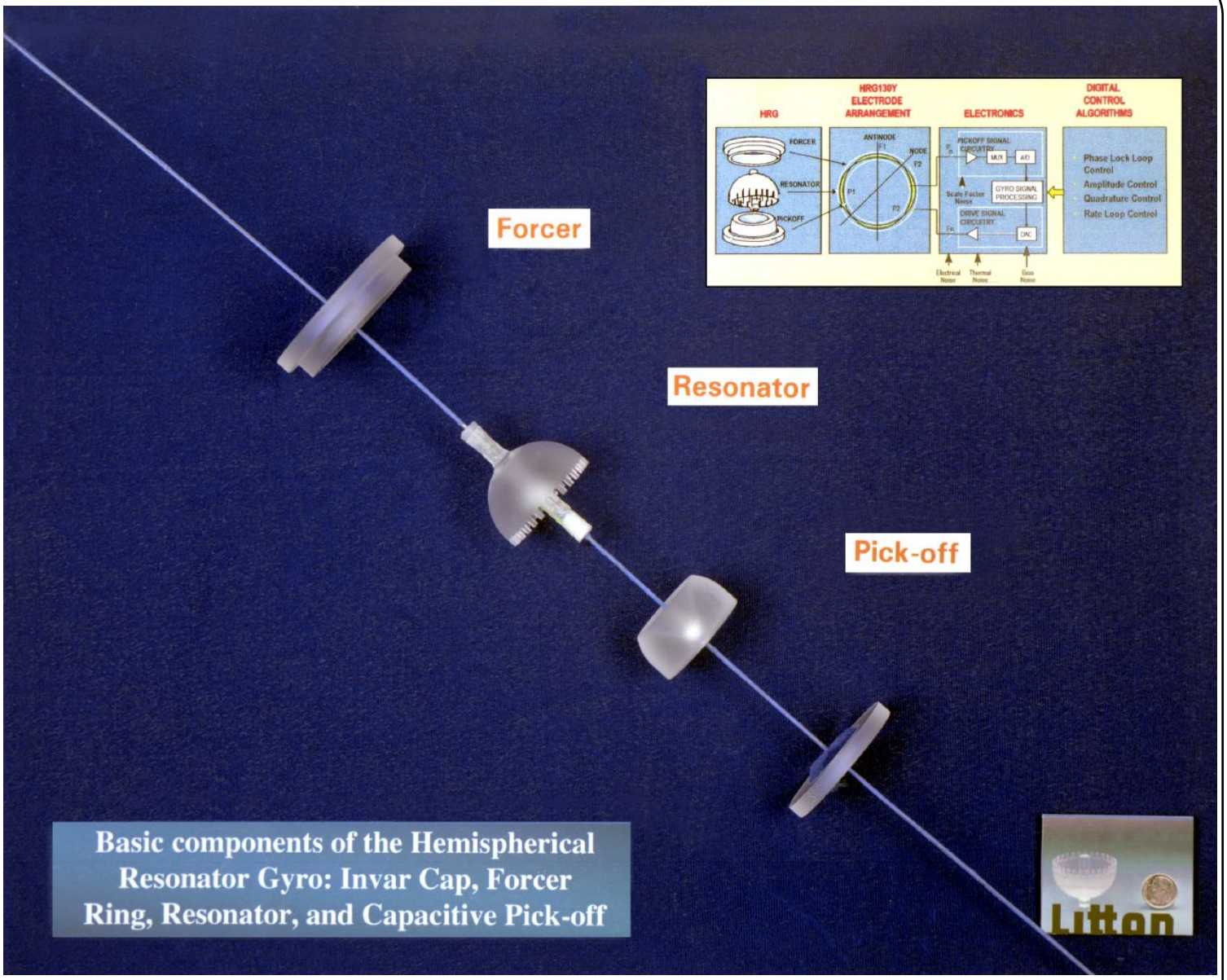
Forcer
Resonator
Pick-off
HRG
HRG130Y ELECTRODE ARRANGEMENT
ELECTRONICS
DIGITAL CONTROL ALGORITHMS
FORCER
RESONATOR
PICKOFF
ANTINODE
NODE
PICKOFF SIGNAL CIRCUITRY
MUX
A/D
GYRO SIGNAL PROCESSING
DRIVE SIGNAL CIRCUITRY
DAC
Phase Lock Loop Control
Amplitude Control
Quadrature Control
Rate Loop Control
Basic components of the Hemispherical Resonator Gyro: Invar Cap, Forcer Ring, Resonator, and Capacitive Pick-off
Litton

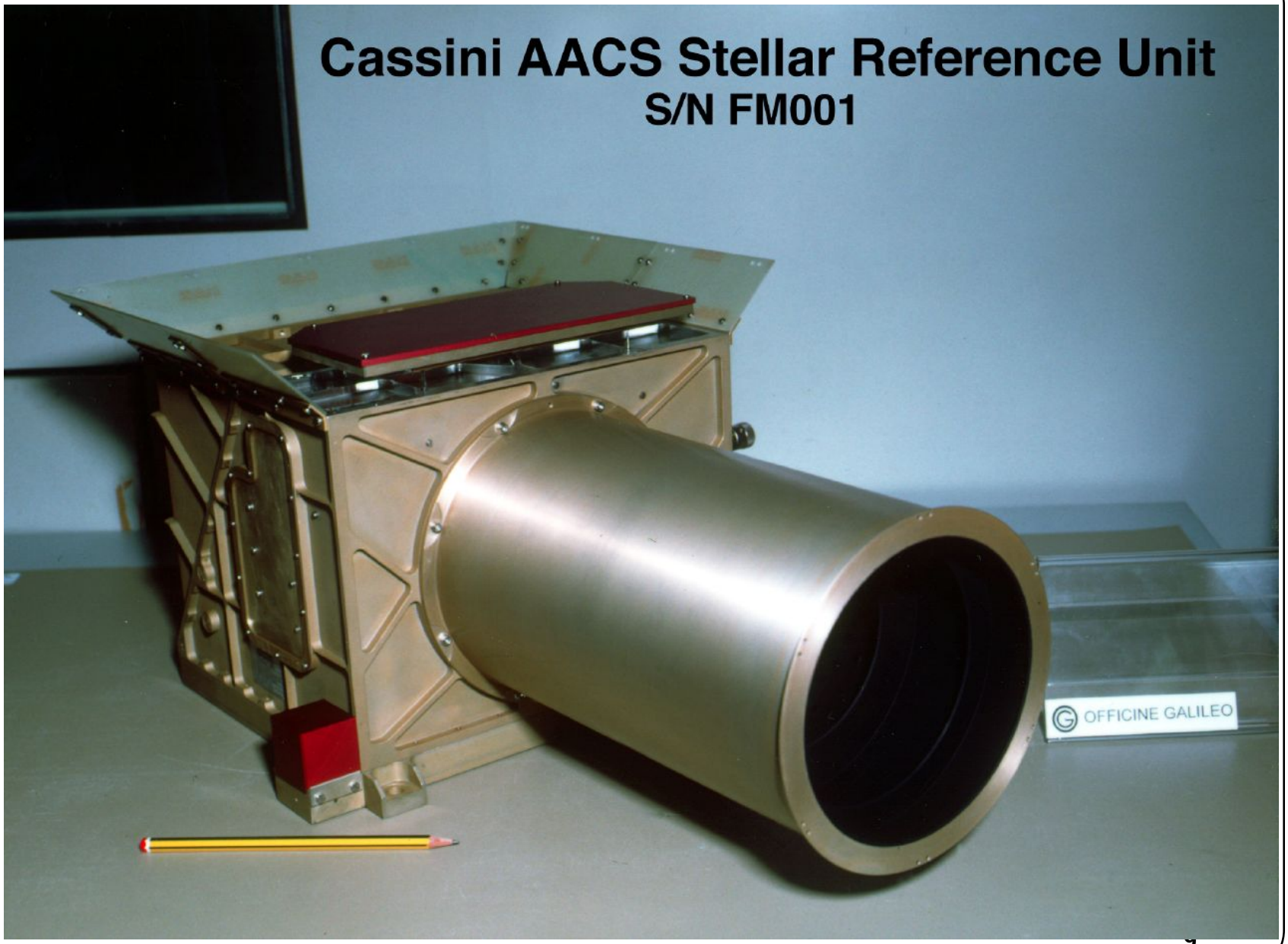

Cassini Stellar Reference Unit (Star Tracker)

CASSINI

Attitude and Articulation Control Subsystem (AACS)

Stellar Reference Unit

The Cassini Stellar Reference Unit (SRU) development is a collaborative effort between Officine Galileo (OG), Florence, Italy, and JPL. The SRU hardware is designed and built by OG while JPL has developed the star identification and tracking software. Integration testing is being accomplished at JPL.

Key Performance Parameters and Capabilities

- Accuracy: 20 μrad per axis (1 star); 330 μrad twist (2 stars)
- Mv: > 6; Sky Coverage: > 99.5%
- 1024 x 1024, 12 μm pixel CCD (manufactured by Loral Fairchild Imaging Sensors)
- Up to five stars tracked simultaneously with variable window sizes and integration times
- 2 - 4 Hz frame rate (typical); 12 bit data output
- Anti-blooming operation for tracking with extended objects or very bright stars in the FOV
- Multi-pinned phase (MPP) operation for dark current suppression
- Pixel summing to track stars at high rates and for faster acquisition
- Control logic implemented in a custom ASIC (manufactured by Loral Federal Systems)
- Image Emulation Unit (IEU) interface for injection of simulated scenes for use in closed loop ground testing of the AACS

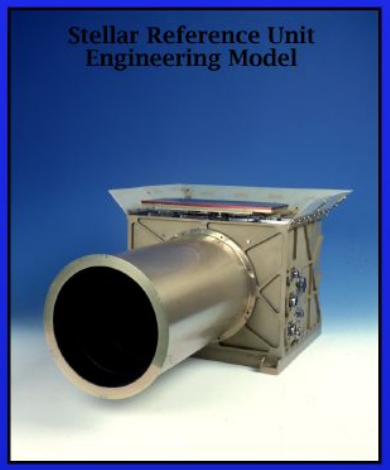

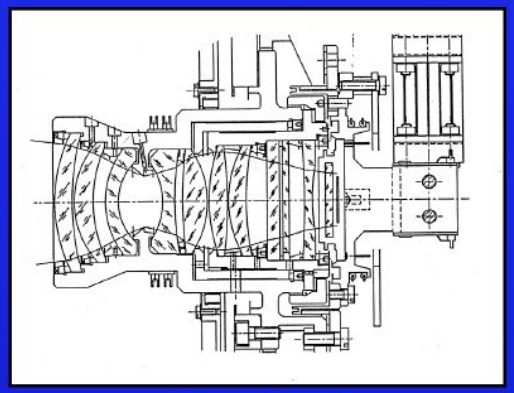

Optical Layout

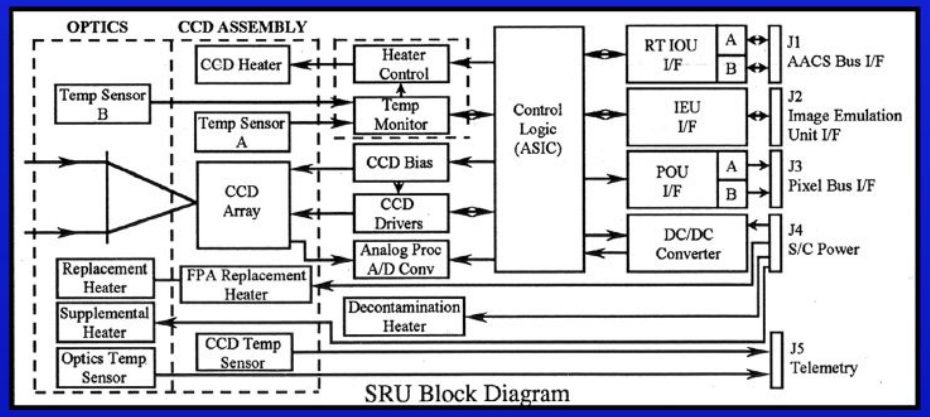

SRU Block Diagram

Optical Characteristics

- Modified double gauss optical system
- No cemented optical elements
- 46 mm focal length, f number=1.76
- 15° FOV (full cone angle)
- Spectral Bandwidth: 550 to 770 nm (50% bandpass)
- Dichroic and anti-reflection coatings
- All lenses produced from radiation hardened glass (Schott)

Cassini 1 N RCS thruster

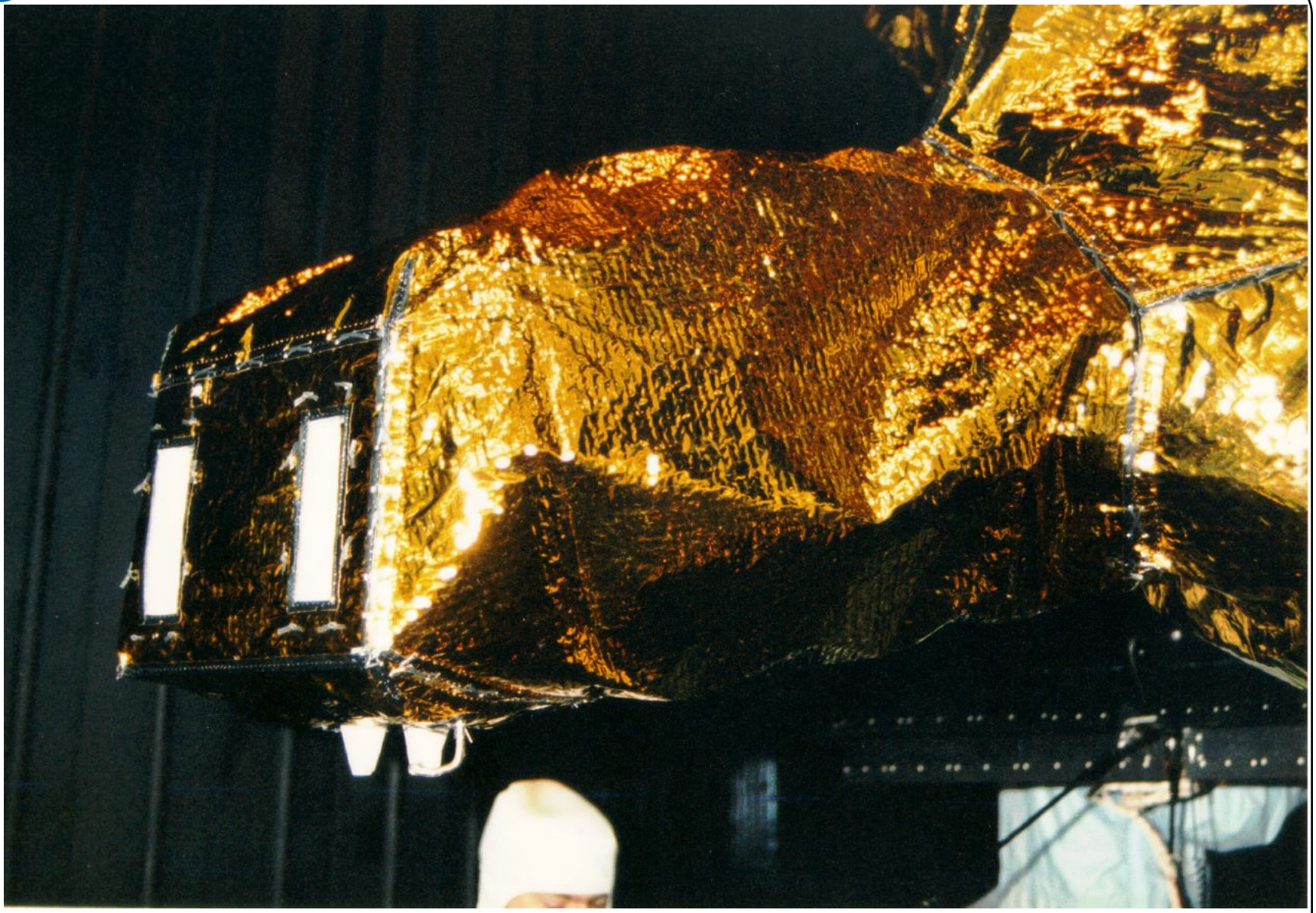

Cassini RCS thruster cluster

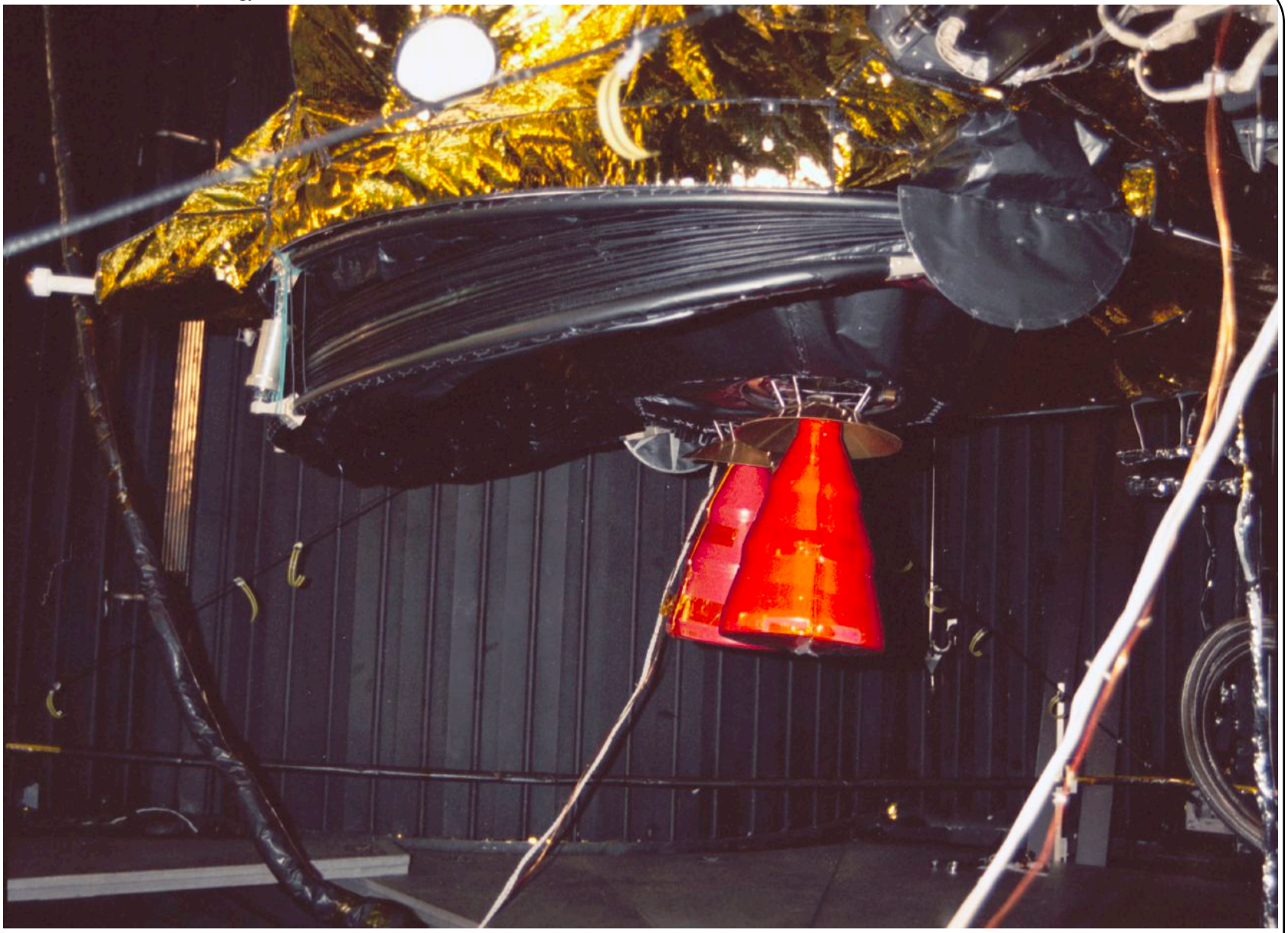

Cassini Main Engine Cover in the stowed configuration

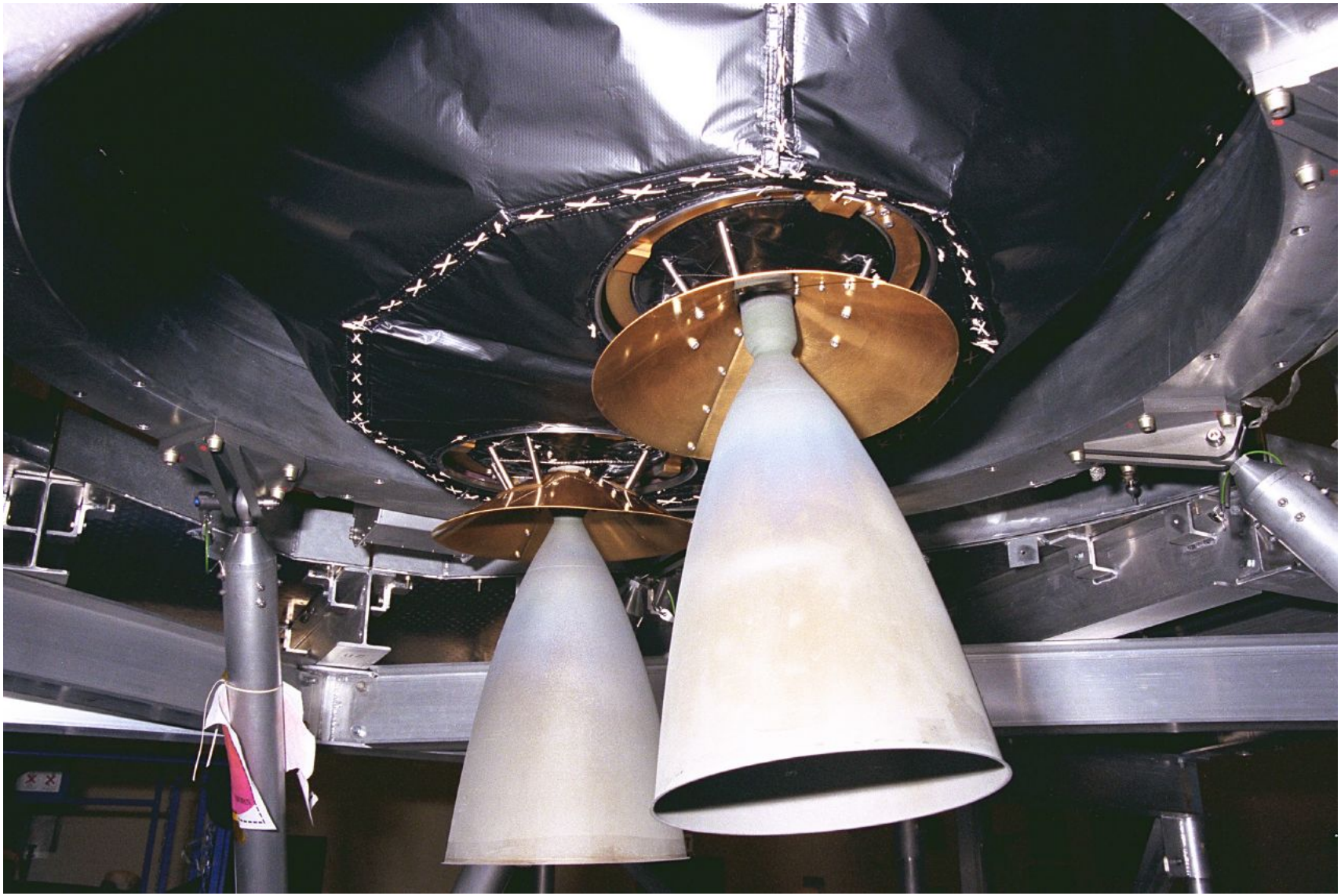

Cassini prime and backup 450 N Main Engines