Large Single-Photon Detector Arrays for the LUVOIR Surveyor

Francesco Marsili

Jet Propulsion Laboratory, California Institute of Technology
fmarsili@jpl.nasa.gov

© 2016 California Institute of Technology. Government sponsorship acknowledged.

Goal: LUVOIR Surveyor

LUVOIR detector requirements

Technology Component	Parameter	Required
Vis-NIR Single Photon Detectors for Enabling Exoplanet Science	Operational Bandwidth	400 nm – 1.8 µm (2.5 µm goal)
	Read Noise	<< 1 e^-
	Dark Current	< 0.001 e^-/pix/s
	Spurious Count Rate	Small compared to integrated dark current
	Quantum Efficiency	> 80% over entire band
	Format	> 2k × 2k pixels
	Other	Radiation hard, minimum 5-year lifetime at SEL2, Non-cryogenic operation preferable

Technology Component	Parameter	Required
UV Single Photon Detectors for Enhanced Exoplanet Science	Operational Bandwidth	200 nm – 400 nm
	Read Noise	<< 1 e^-
	Dark Current	< 0.001 e^-/pix/s
	Spurious Count Rate	Small compared to integrated dark current
	Quantum Efficiency	> 50% over the entire band
	Format	> 2k × 2k pixels
	Other	Radiation hard, minimum 5-year lifetime at SEL2, Non-cryogenic operation preferable

Technology Component	Parameter	Required
Large-format High-Sensitivity UV Detectors for General Astrophysics	Operational Bandwidth	90 nm – 300 nm
	Read Noise	< 5 e^-
	Quantum Efficiency	> 70%
	Format	> 2k × 2k pixels
	Other	Radiation hard, minimum lifetime at SEL2, Non-cryogenic operation preferable, Visible blind

Challenging Requirements

M. R. Bolcar, et al. SPIE 2015

Superconducting Nanowire Single Photon Detetectors (SNSPDs)

SNSPD performance

Array size	**< 10^2**
Rad Hard	Yes
Efficiency	> 90%
Bandwidth	UV to mid IR
Operating Temperature	1 – 10 K
Noise	< 1 cps
Energy Resolution	No
Time resolution	High (~ 50 ps)
Maximum count rate	50 MHz

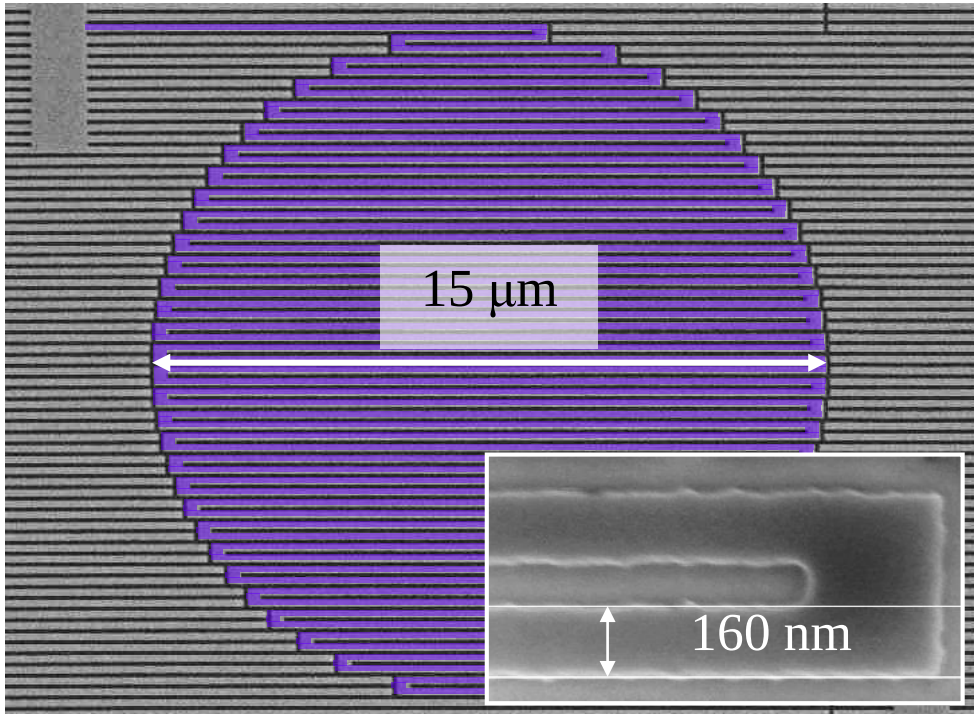

LETTERS
PUBLISHED ONLINE: 24 FEBRUARY 2013 | DOI: 10.1038/NPHOTON.2013.13
nature photonics

Detecting single infrared photons with 93% system efficiency

Single-pixel SNSPDs perform photon counting with the best performance, but it is difficult to make large arrays

Francesco Marsili

Nanowire Resonator Detectors (NRDs)

New detector concept for large arrays of ultrasensitive single-photon detectors by combining SNSPD and superconducting resonator technologies

Francesco Marsili

NRD Operating Principle

NRD Operating Principle

Steady state

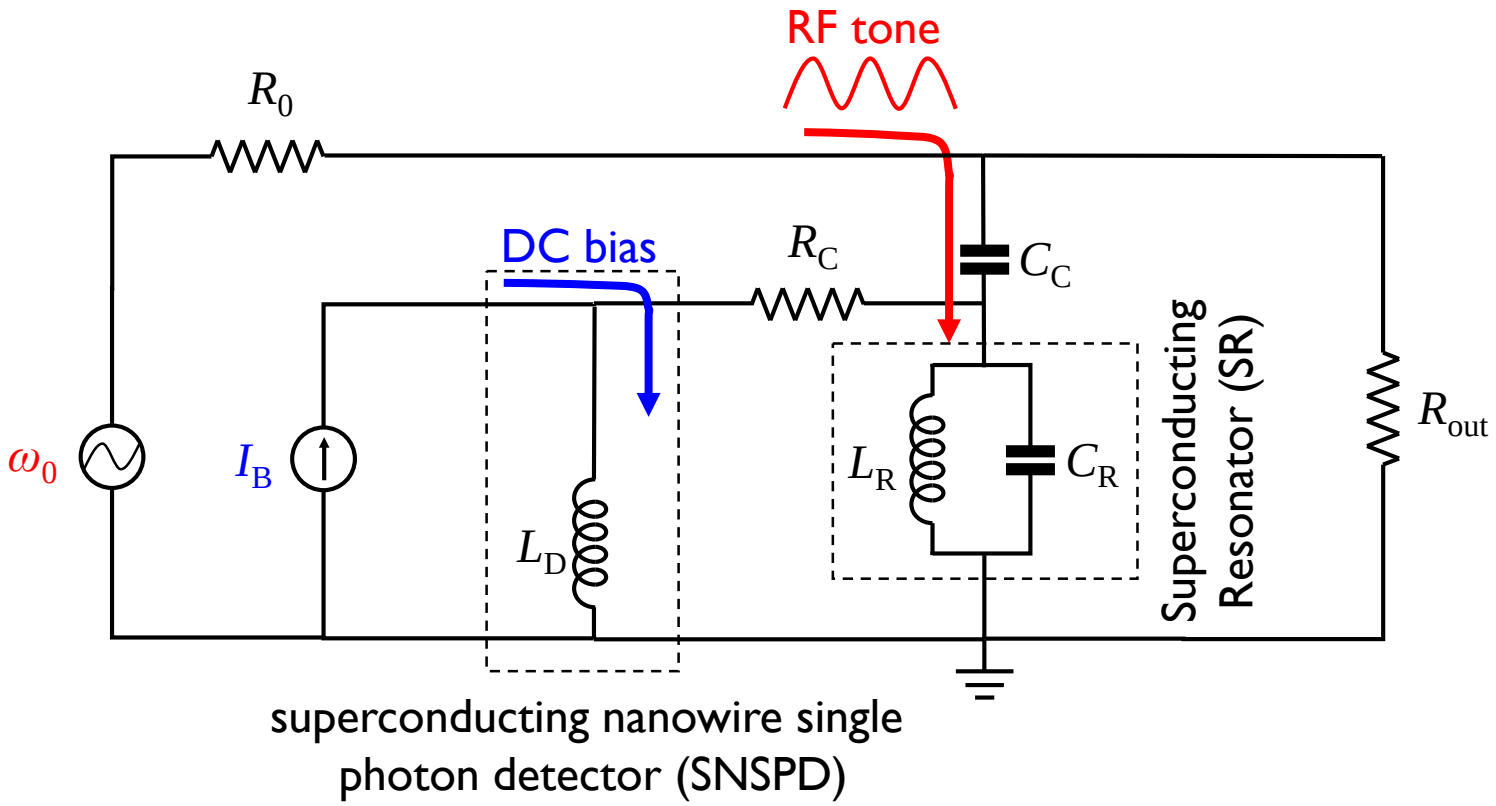

The RF tone is resonant with the superconducting resonator

NRD Operating Principle

Steady state

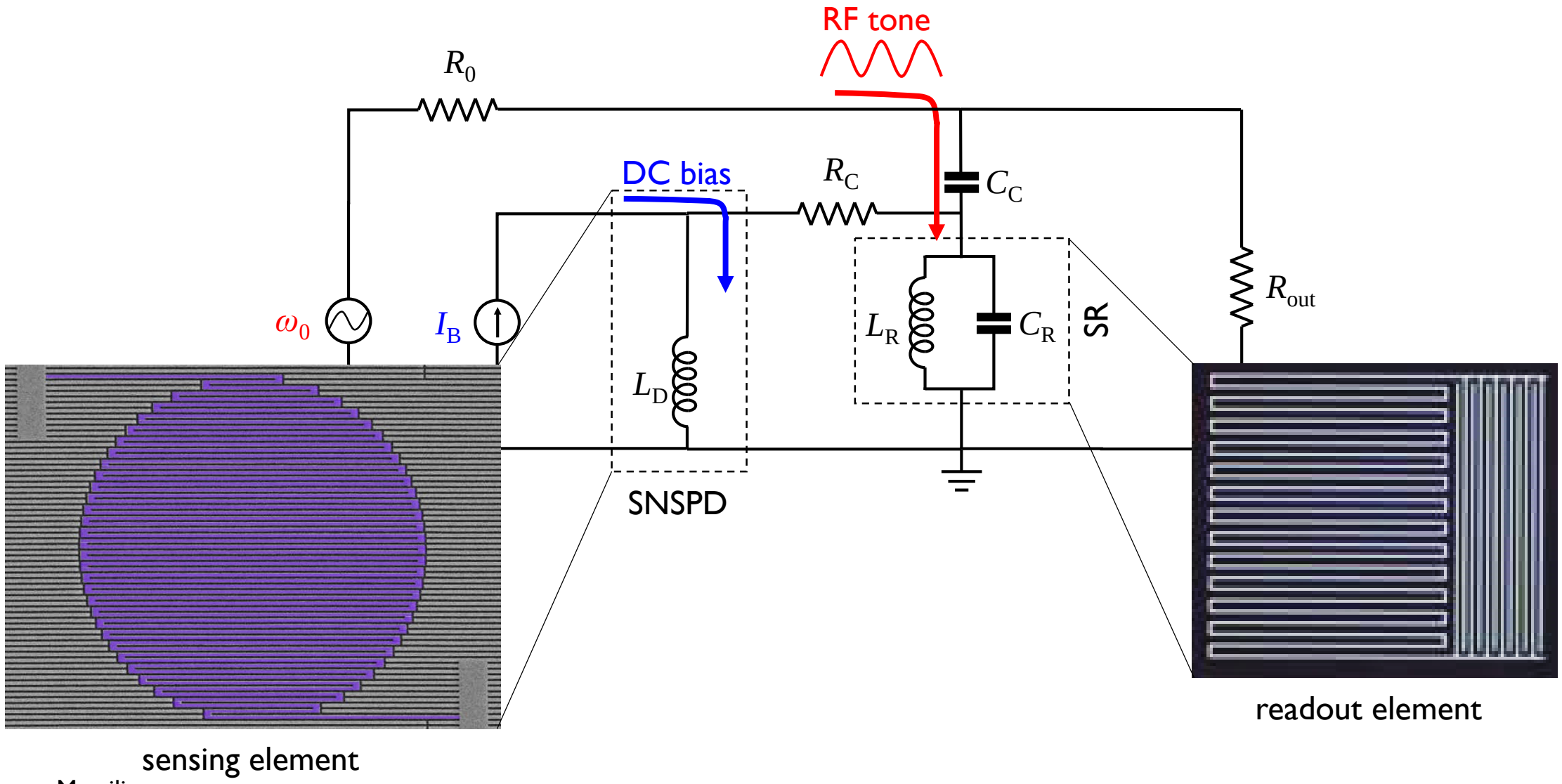

Francesco Marsili

NRD Operating Principle

SNSPD absorbs photon

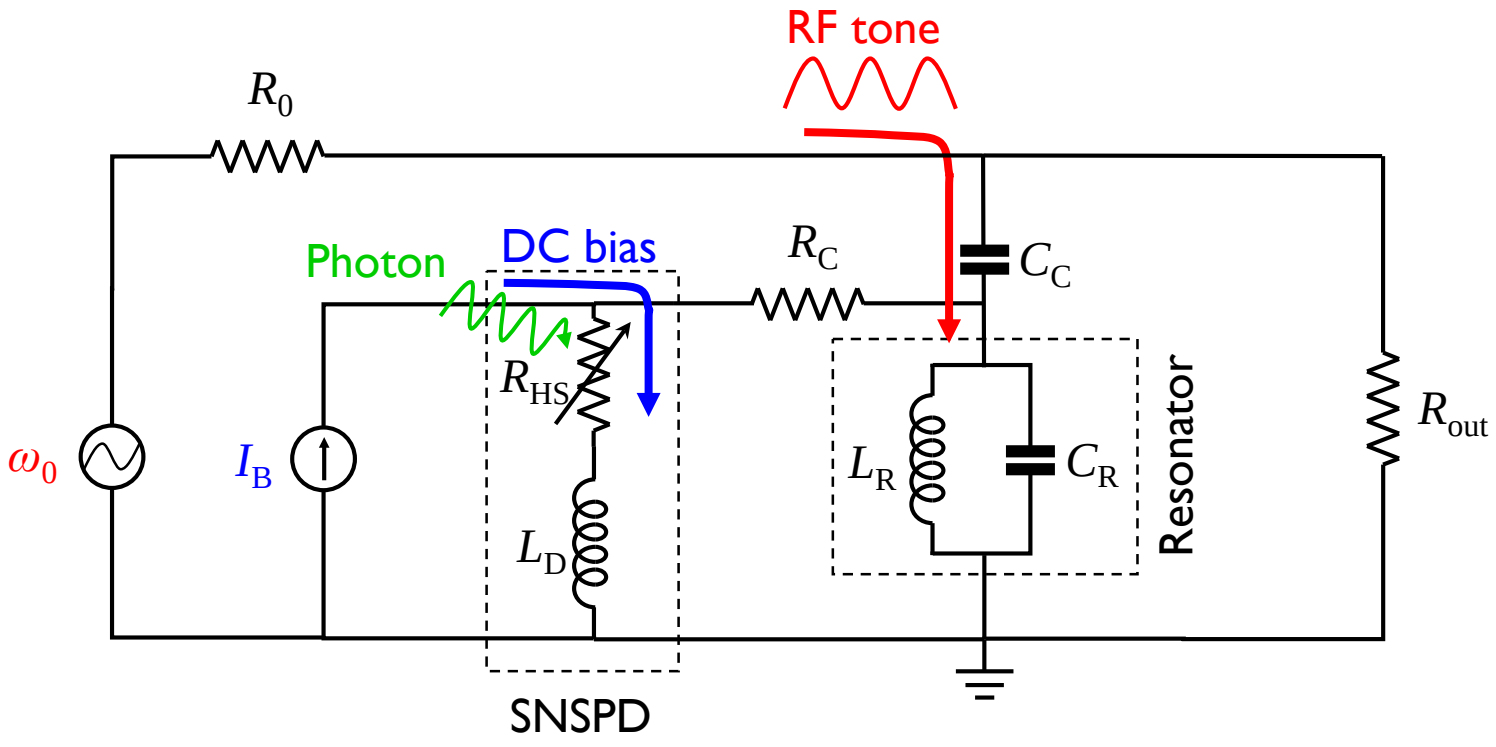

The photon causes the SNSPD to switch from the superconducting (not resistive) to the normal (resistive) state

Detection Mechanism of SNSPDs

Detection Mechanism of SNSPDs

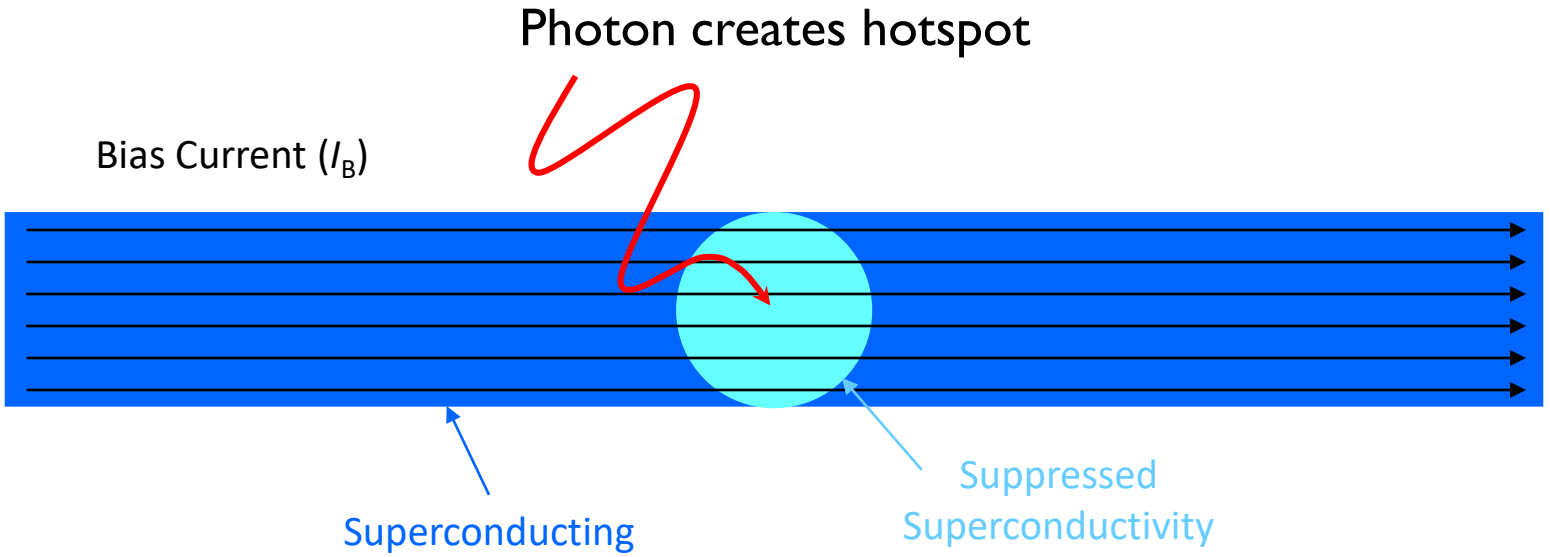

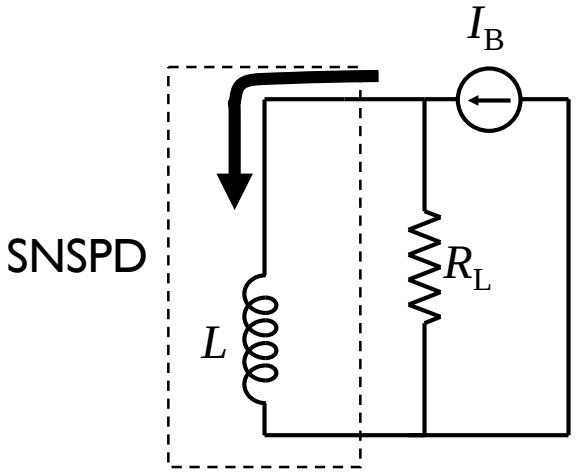

Semenov, A., et al., *Eur. Phys. J. B* **47**, 495-501 (2005)

Detection Mechanism of SNSPDs

Normal slab is created

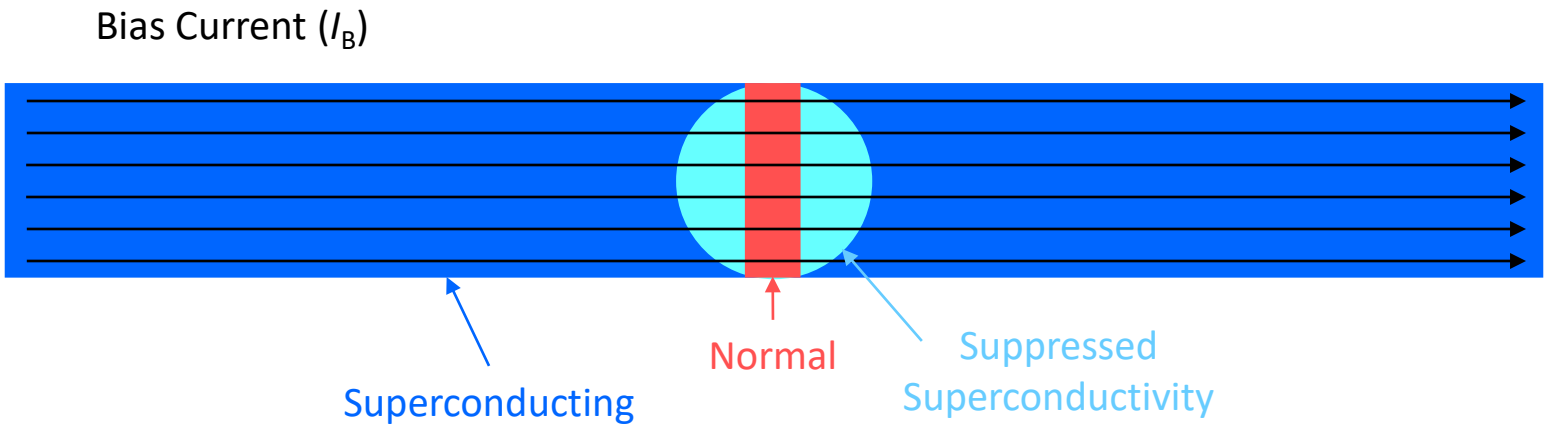

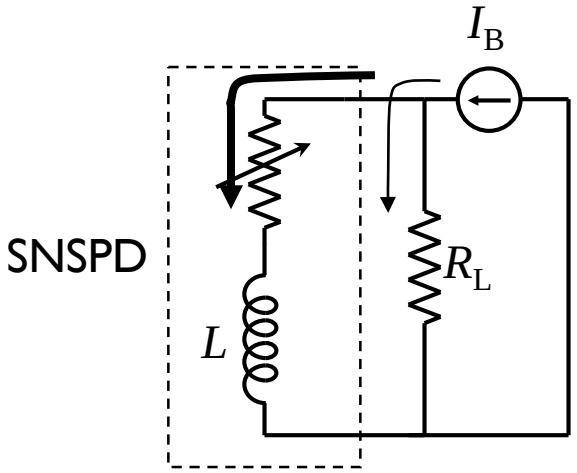

Semenov, A., et al., *Eur. Phys. J. B* **47**, 495-501 (2005)

Detection Mechanism of SNSPDs

Normal domain expands
(Joule Expansion)

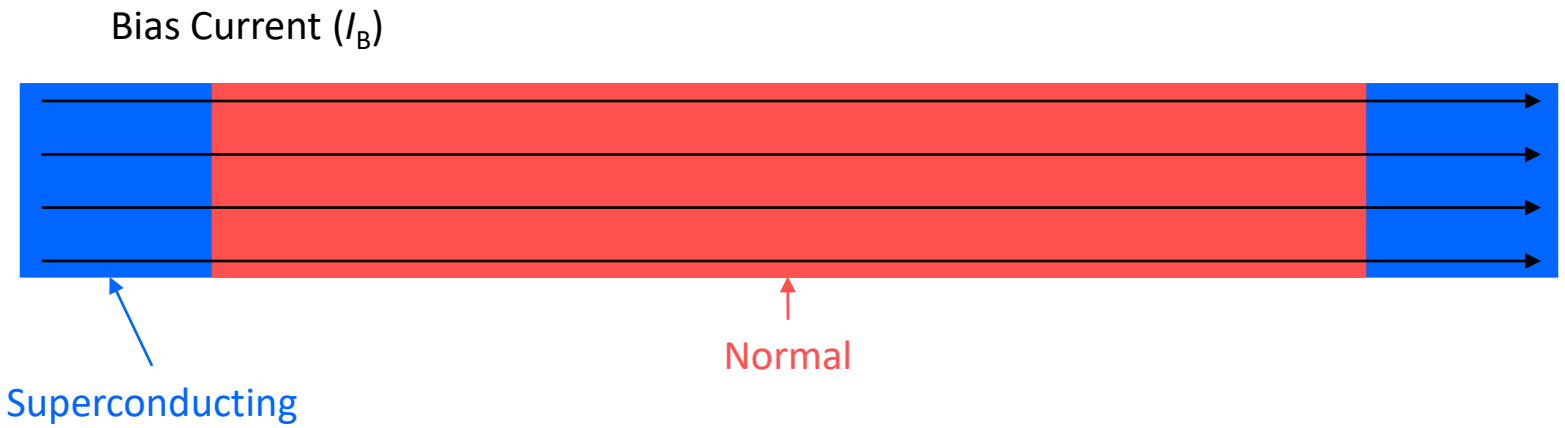

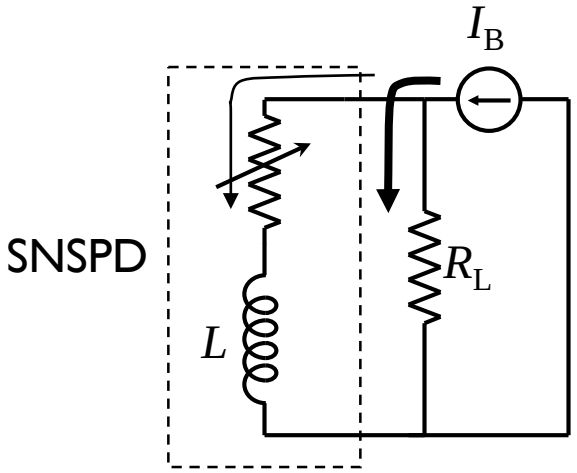

Yang, J. K. W. *et al. IEEE Trans. Appl. Supercond.* **17**, 581-585 (2007).

NRD Operating Principle

SNSPD bias current diverted to resonator

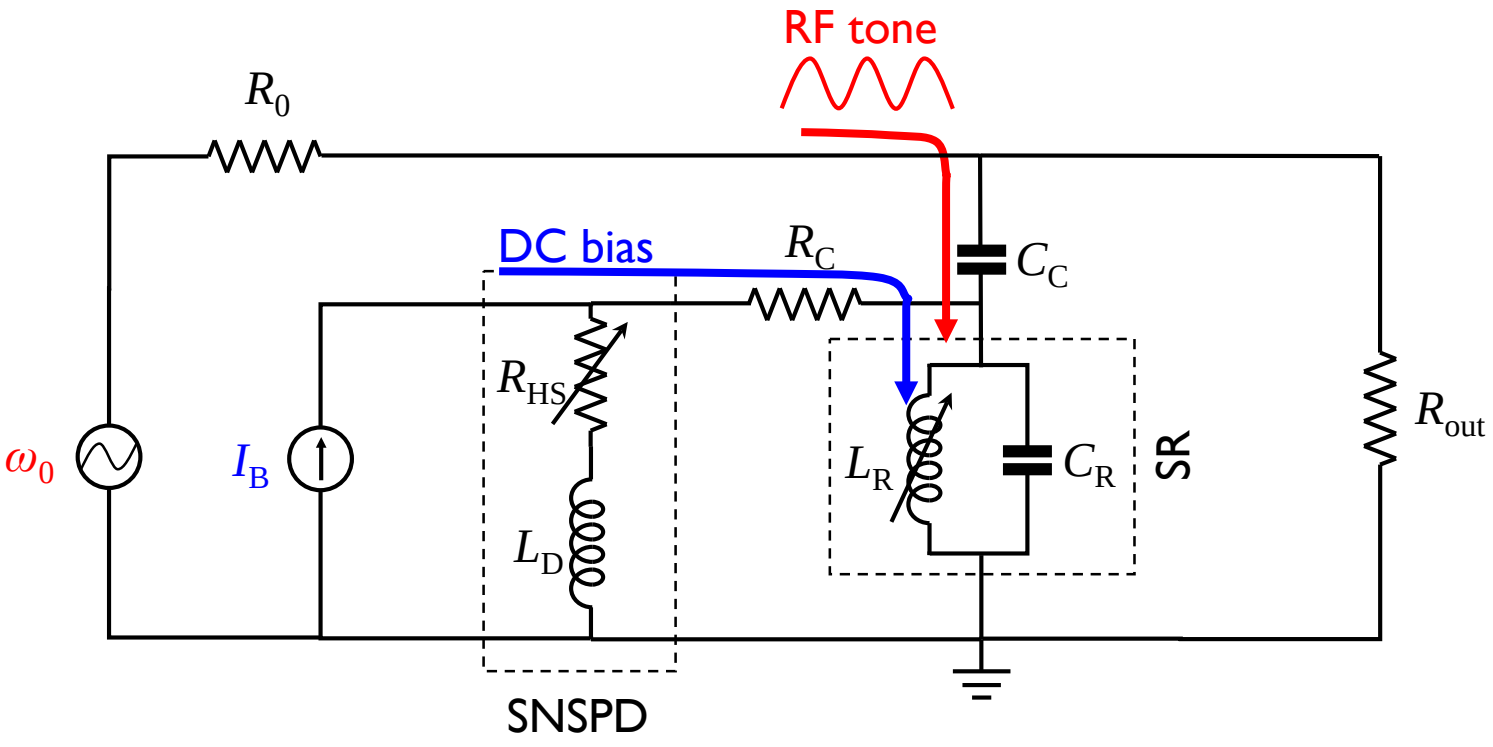

The current redistribution causes the inductance of the SR to increase

Current Dependence of Kinetic Inductance

The inductance of a superconducting inductor increases with bias current

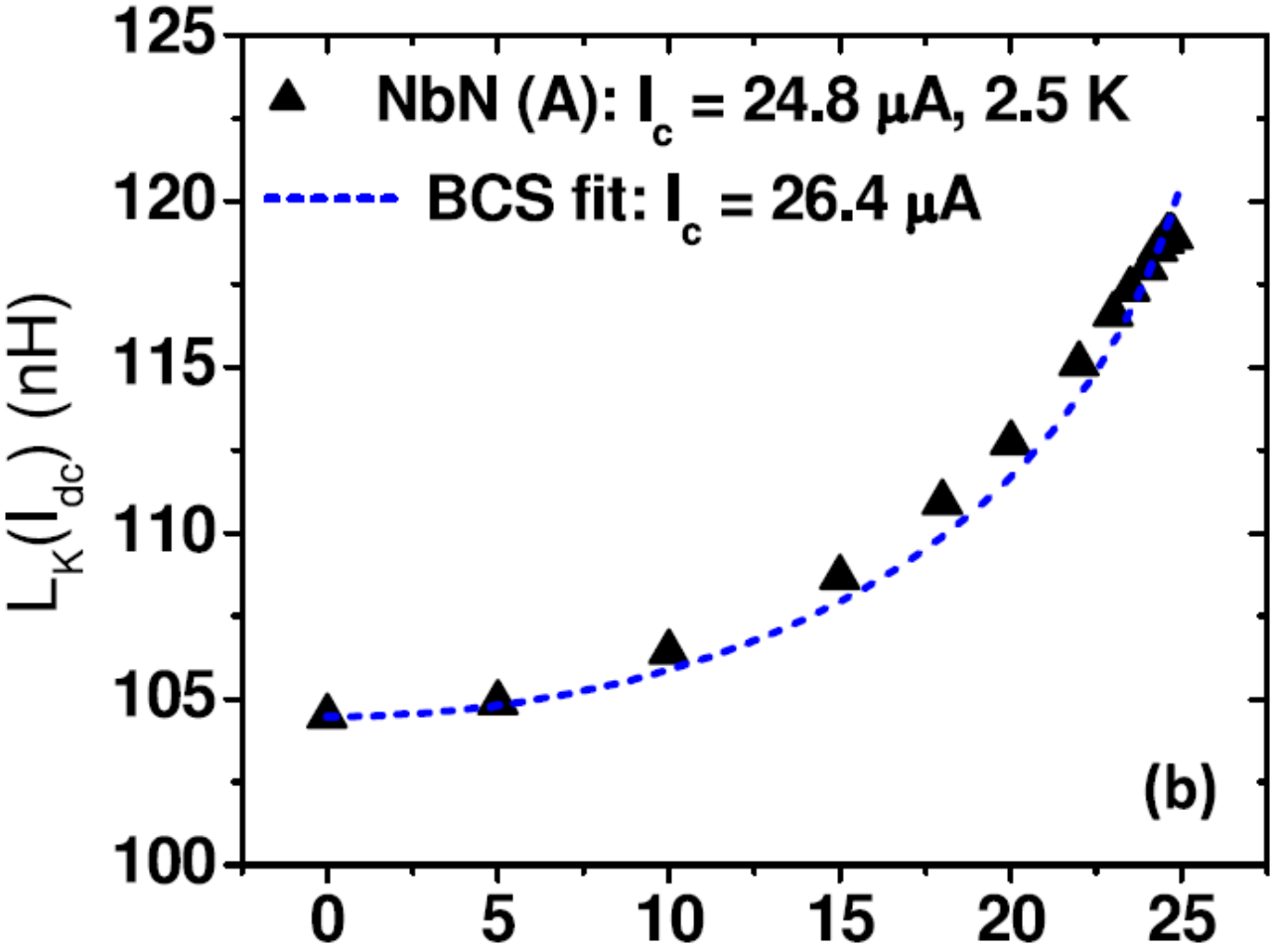

A. J. Annunziata *et al. Nanotechnology* **21**, 445202 (2010).

NRD Operating Principle

RF tone diverted to readout

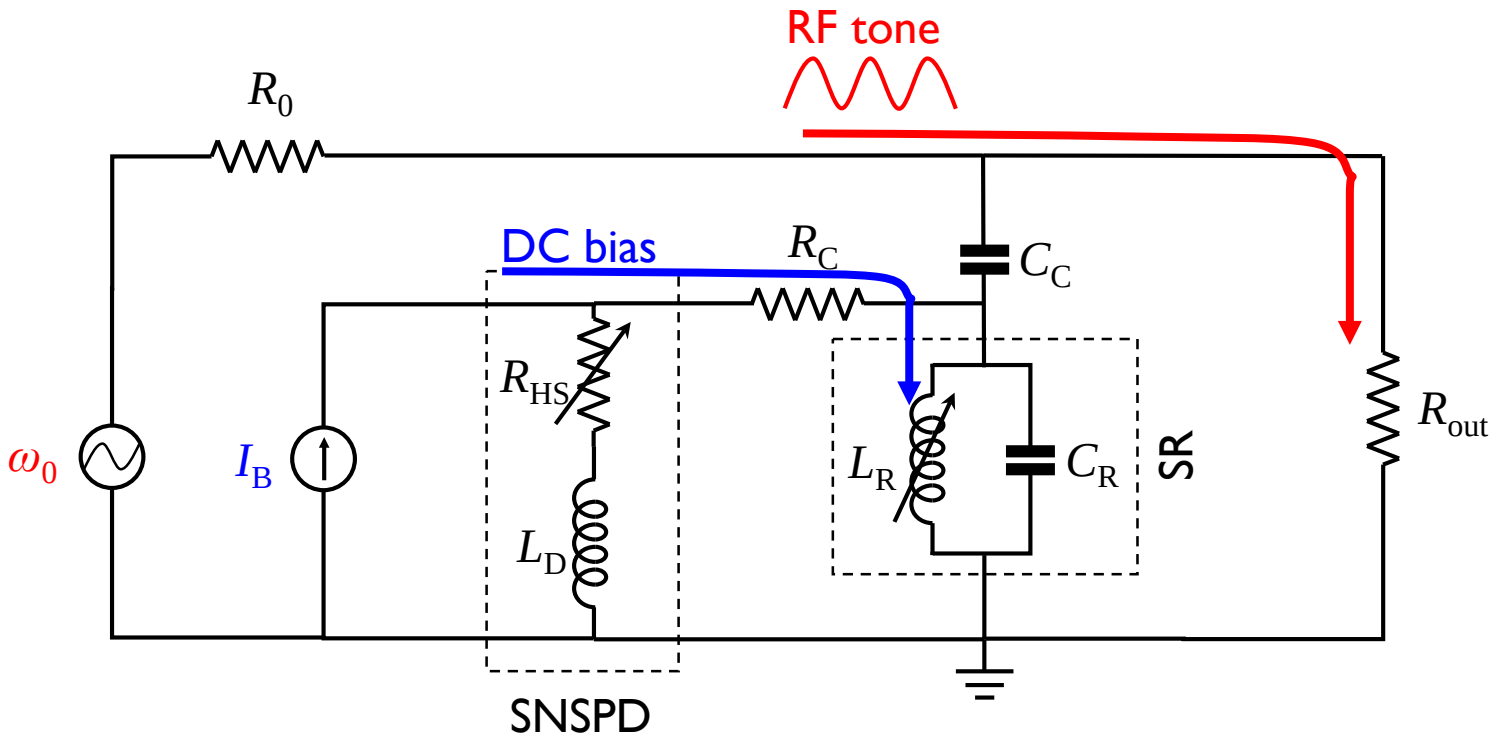

Due to the change in L_R, the RF tone is no longer resonant with the superconducting resonator and is transmitted to the readout

NRD Operating Principle

SNSPD relaxes

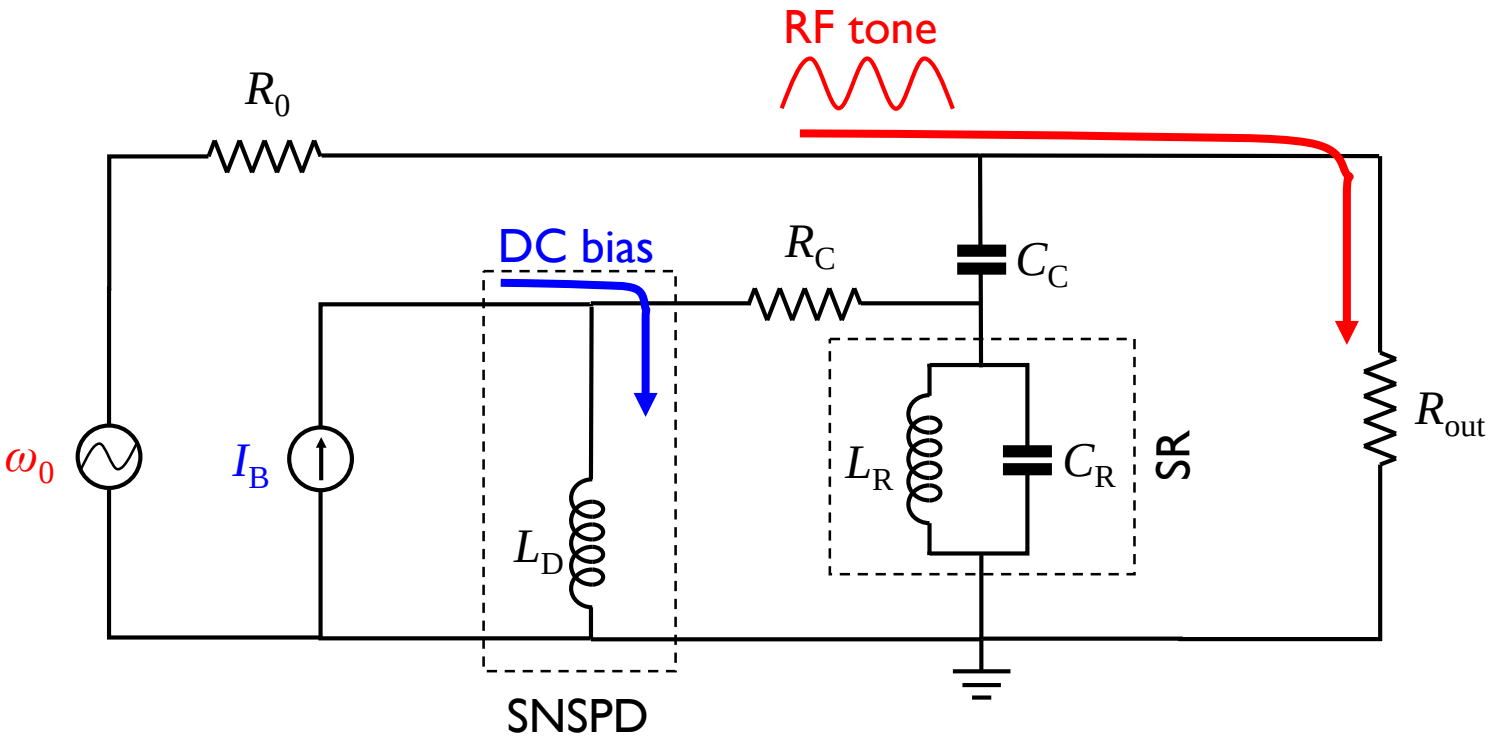

L_R returns to the steady-state value, so the RF tone is resonant with the SR again

NKID Operating Principle

Resonator relaxes

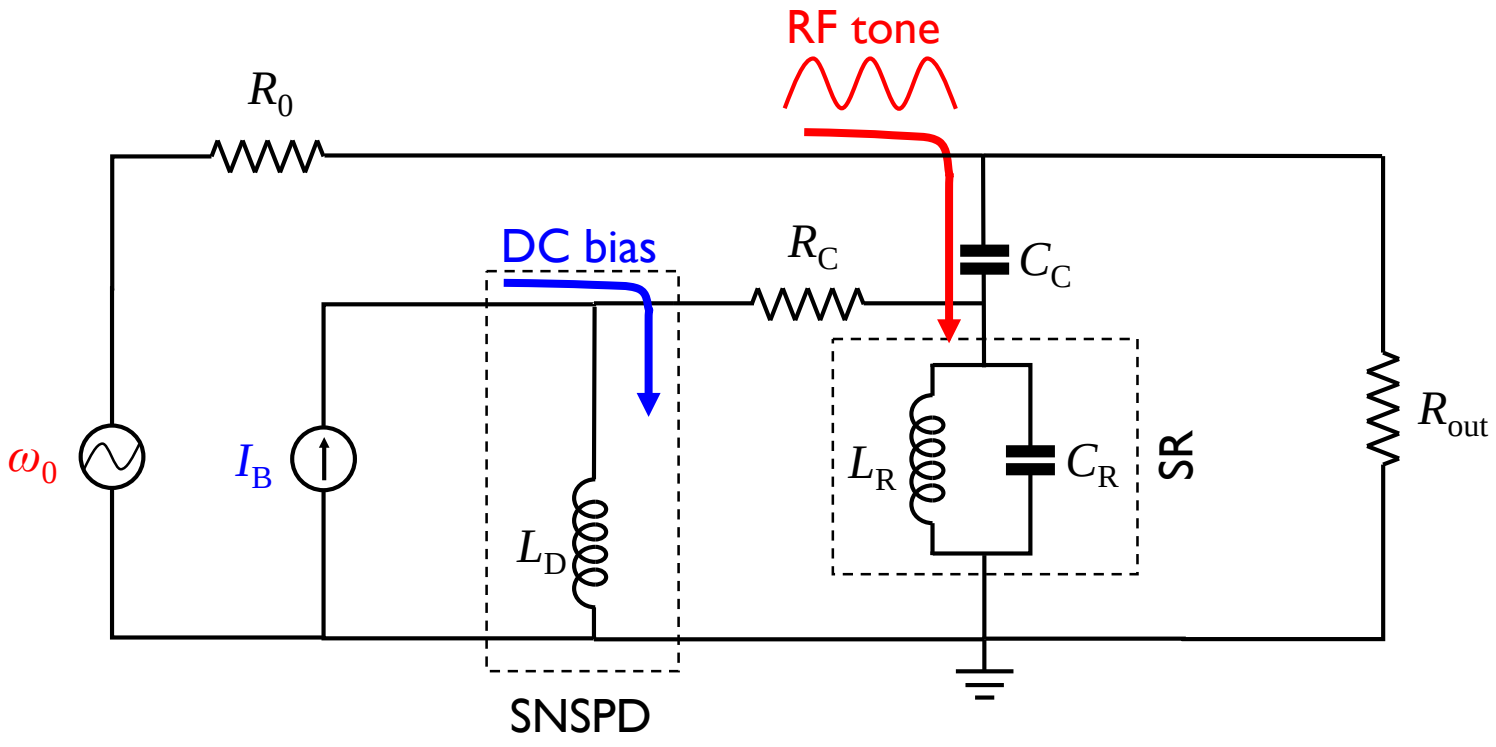

Simulation: Single-Pixel NRD Operation

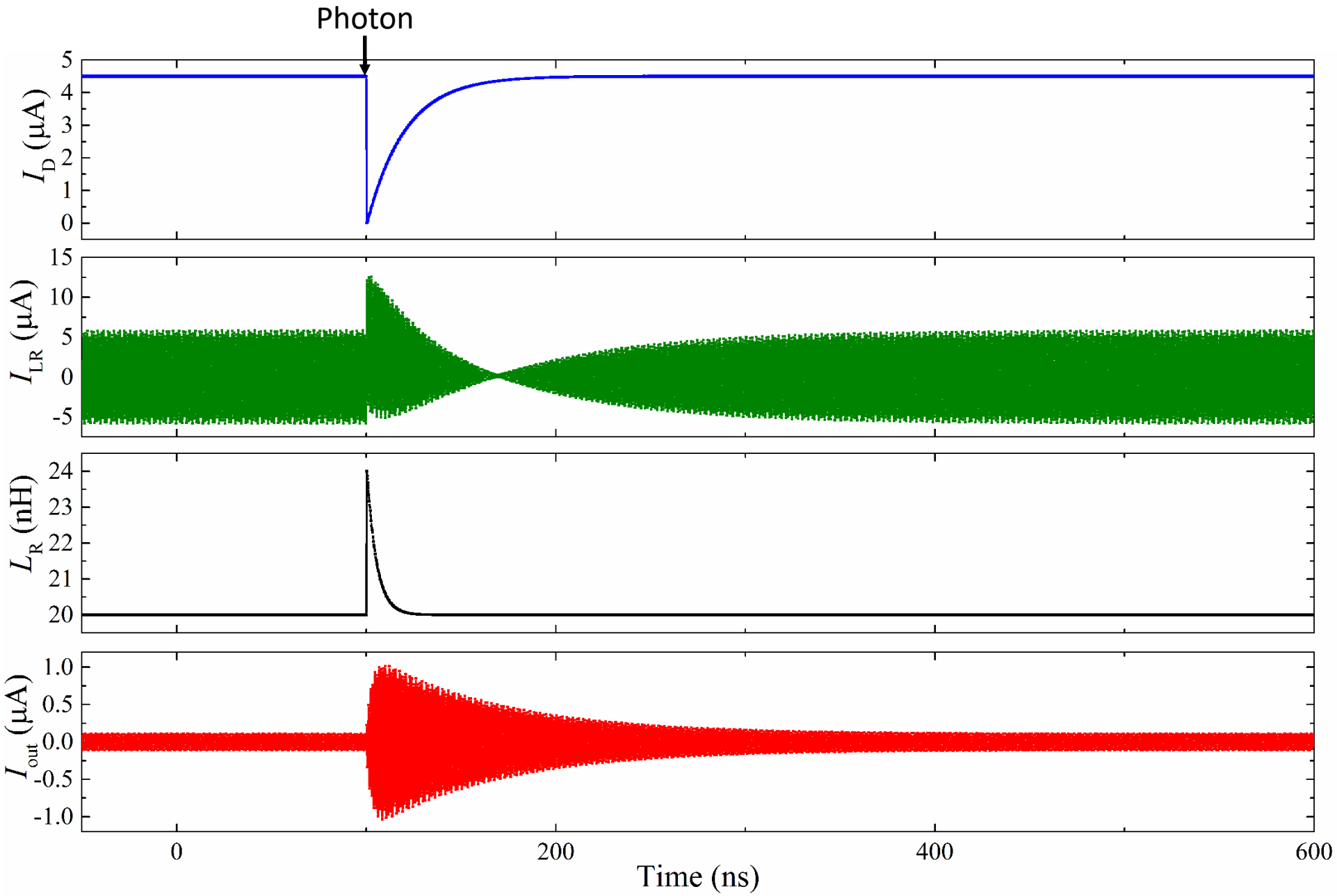

Francesco Marsili

Multiplexing

NRD Multiplexing Scheme

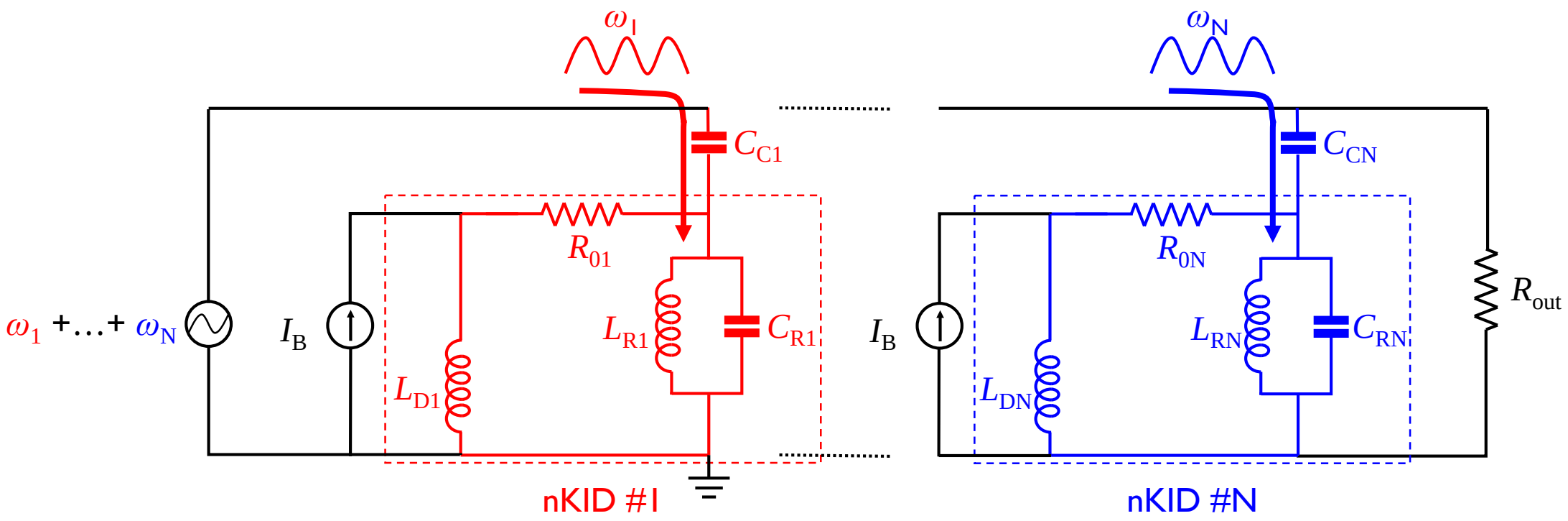

NRDs can be multiplexed like MKIDs (kilopixel arrays possible)

Simulations

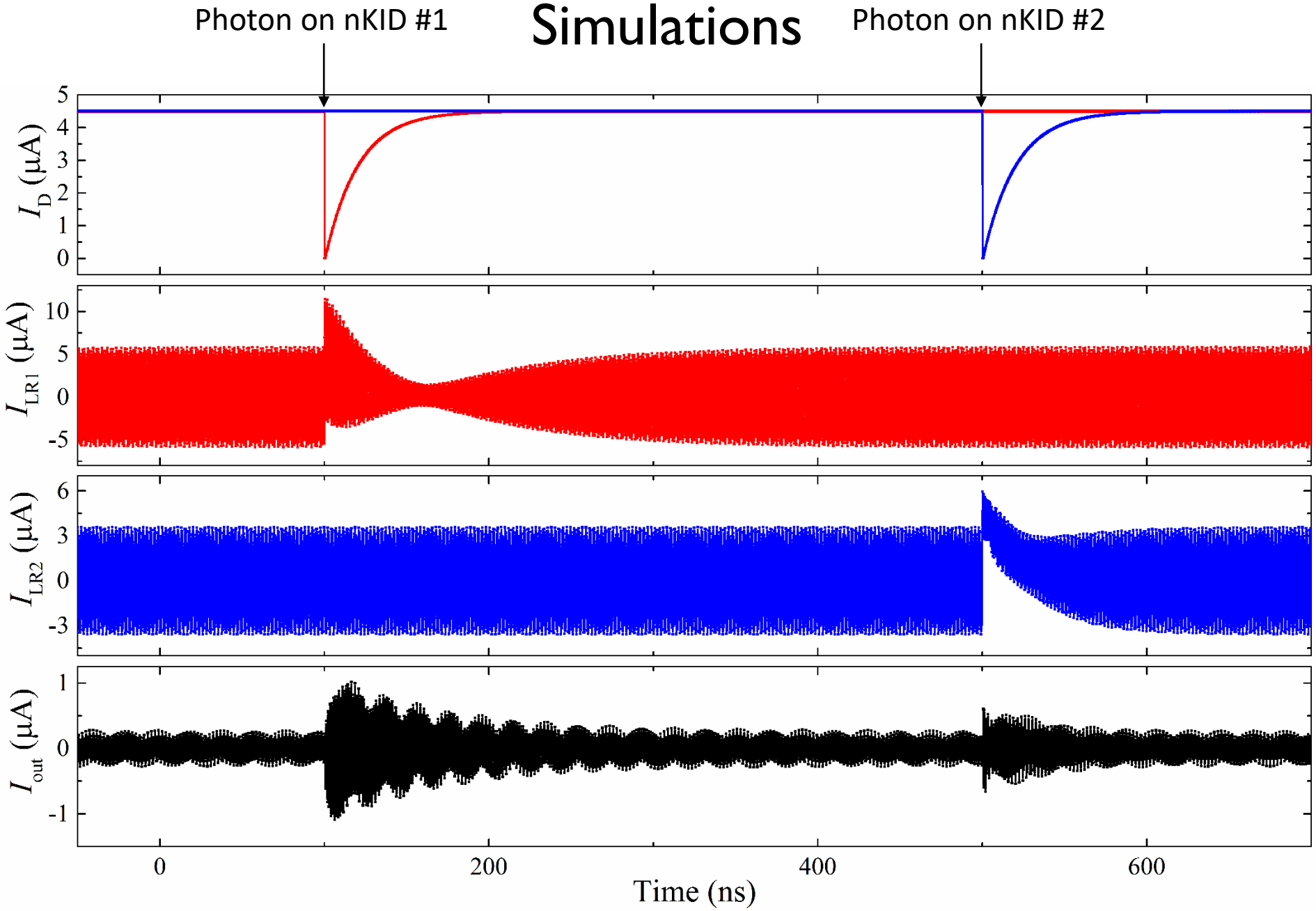

Francesco Marsili

Detection Efficiency

SNSPD in a Cavity

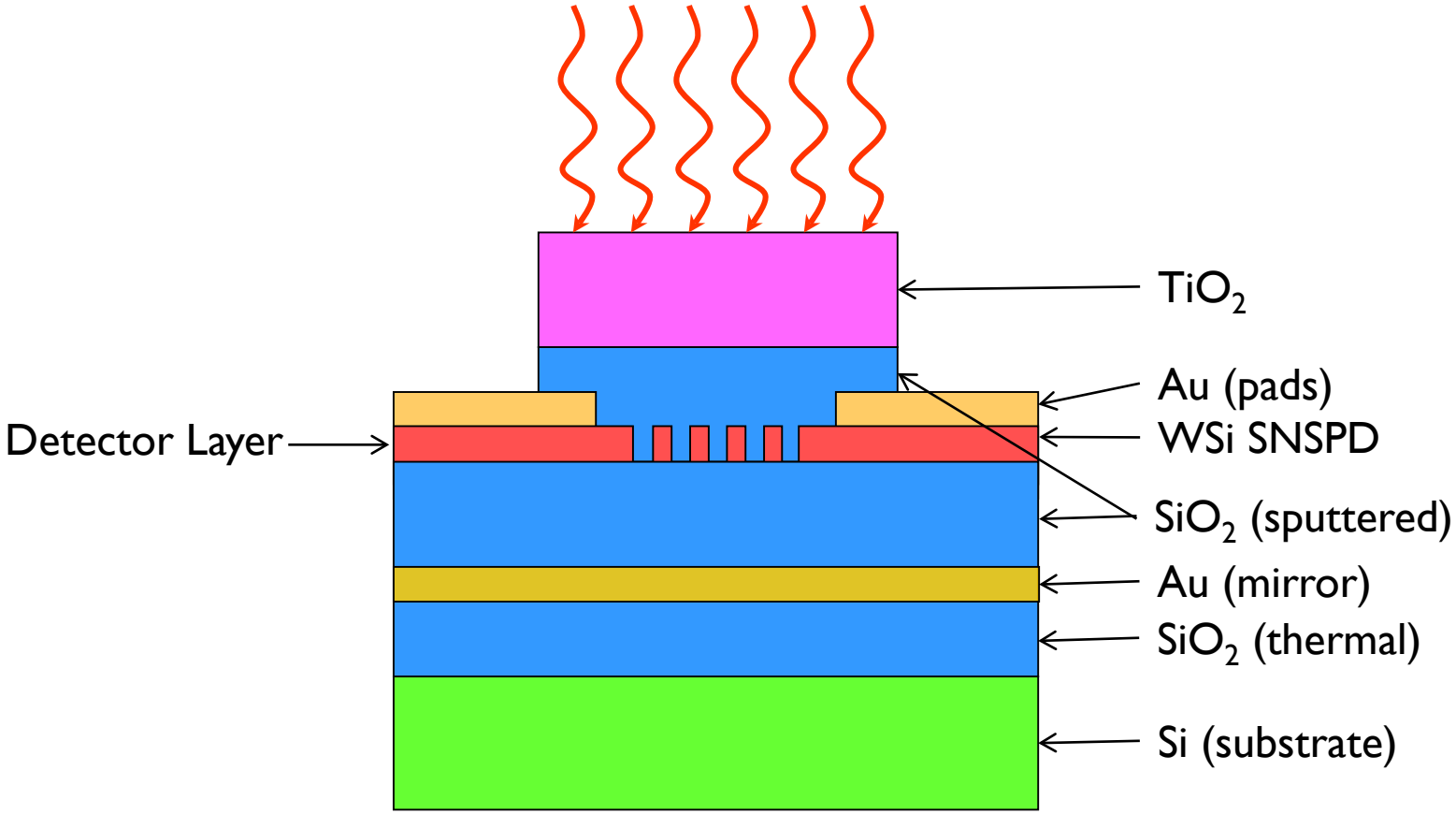

- Photosensitive nanowire element is embedded in a vertical quarter-wave cavity
- Enhances detection efficiency from 20% to >90%
- Developed optimized cavities at 1550 nm, 1310 nm, 980 nm, 795nm, and 370 nm

Optical Bandwidth

SNSPD Efficiency in the Mid-IR

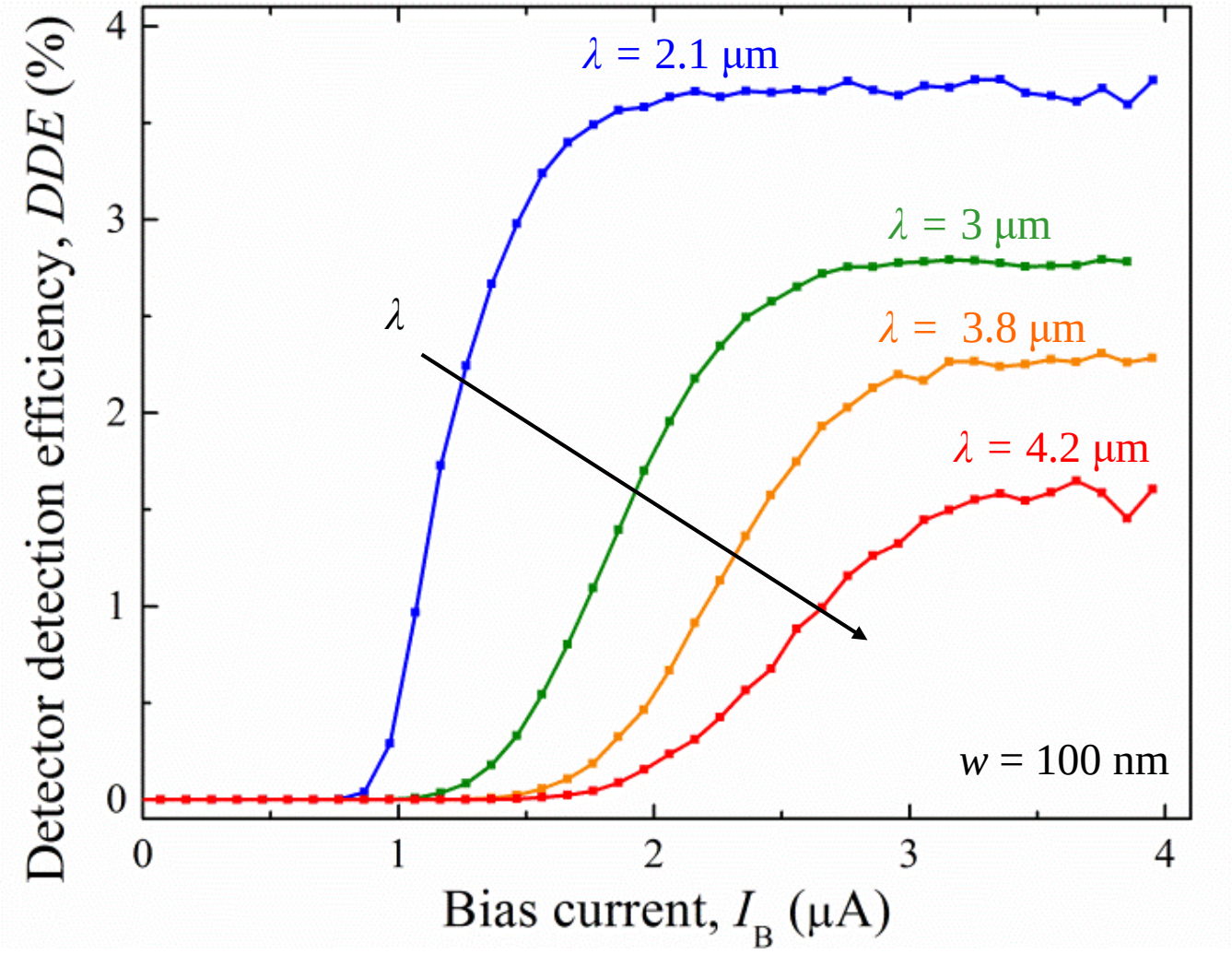

Plateau in detection efficiency indicates near-unity internal detection efficiency

SNSPD Efficiency in the Near UV

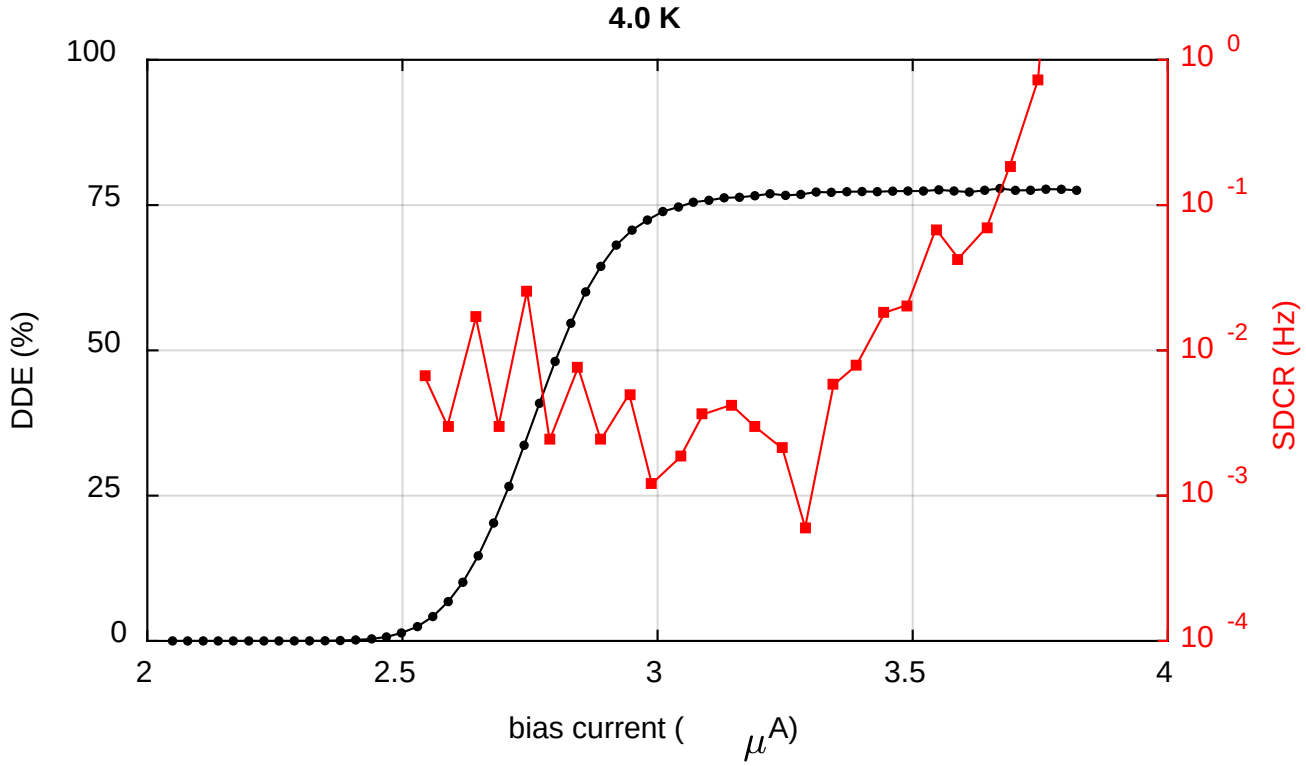

- 70 – 80% device efficiency at 370 nm
- System dark count rate < 10 mHz at 4 K
- Blind to 1550 nm photons

Francesco Marsili

Prospects for Shorter Wavelengths

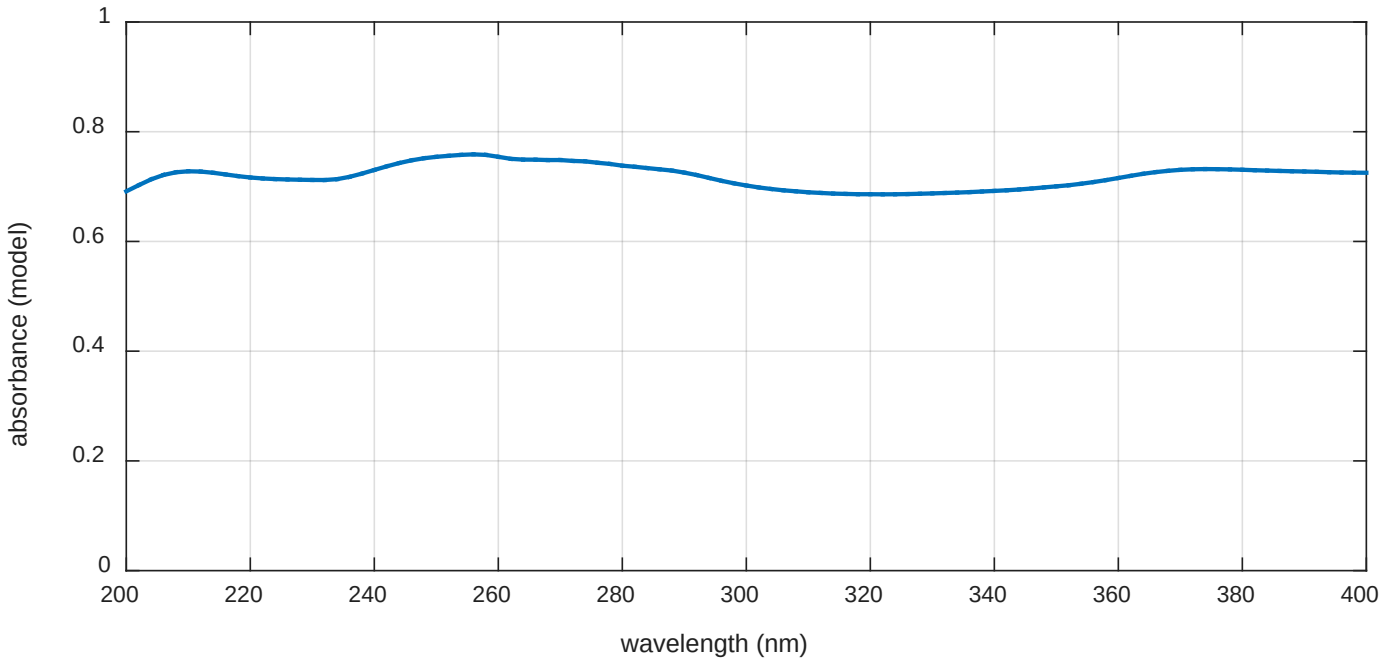

- Broadband efficiency > 60% for UV wavelengths
- Prediction is limited by lack of knowledge of MoSi n & k values below 200 nm

Operating Temperature

Possible NRD materials

MoSi

Bulk T_C ~ 6.8 K

Single-Photon detection at 4 K

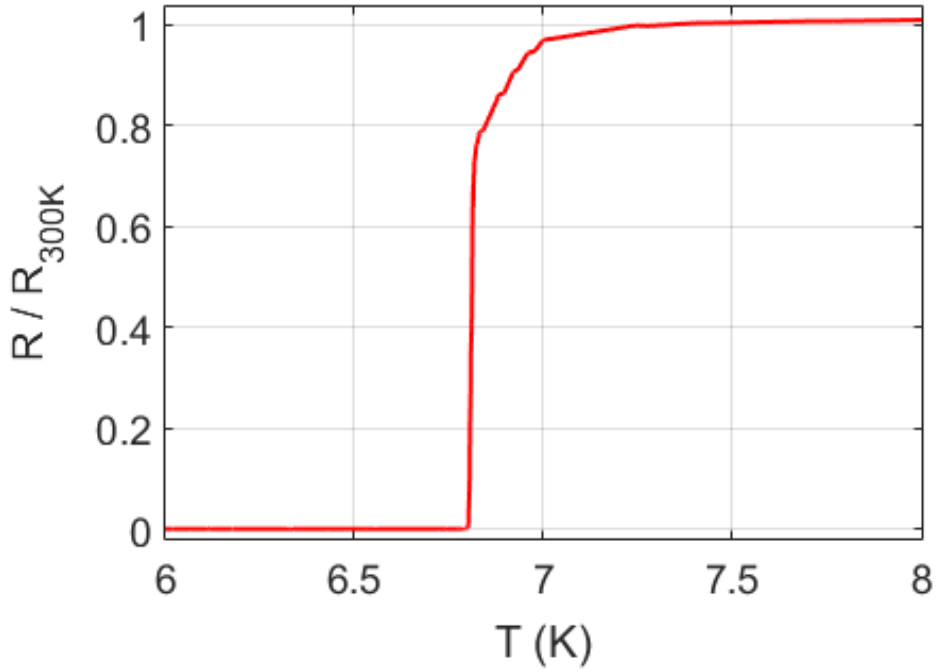

MgB_2

Bulk Tc ~ 40 K

Single-Photon detection at 20 K

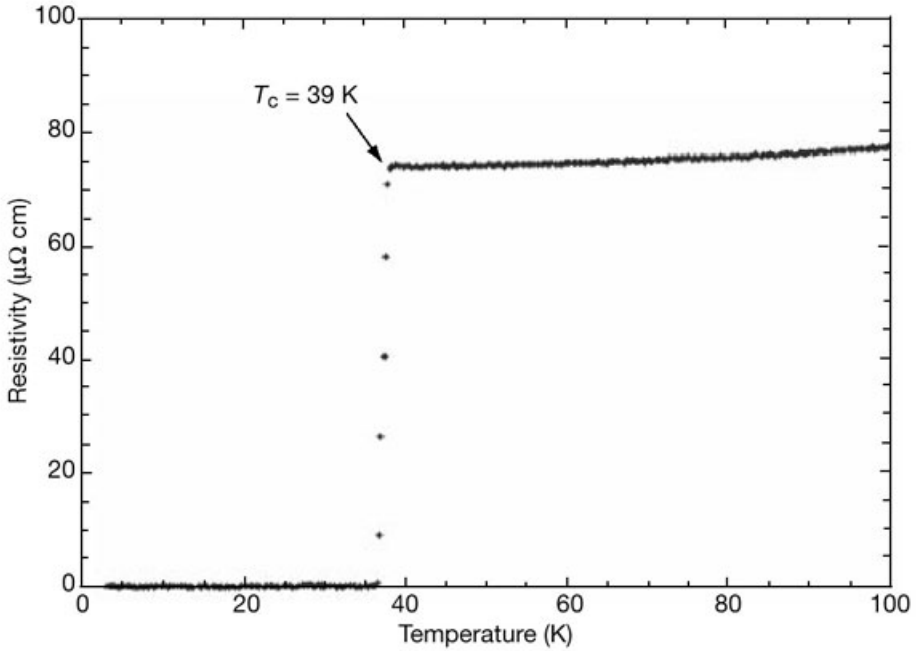

NRDs can fulfill most of LUVOIR detector requirements

Technology Component	Parameter	Required
Vis-NIR Single Photon Detectors for Enabling Exoplanet Science	Operational Bandwidth	400 nm – 1.8 µm (2.5 µm goal)
	Read Noise	<< 1 e^-
	Dark Current	< 0.001 e^-/pix/s
	Spurious Count Rate	Small compared to integrated dark current
	Quantum Efficiency	> 80% over entire band
	Format	> 2k × 2k pixels
	Other	Radiation hard, minimum 5-year lifetime at SEL2, Non-cryogenic operation preferable

Technology Component	Parameter	Required
UV Single Photon Detectors for Enhanced Exoplanet Science	Operational Bandwidth	200 nm – 400 nm
	Read Noise	<< 1 e^-
	Dark Current	< 0.001 e^-/pix/s
	Spurious Count Rate	Small compared to integrated dark current
	Quantum Efficiency	> 50% over the entire band
	Format	> 2k × 2k pixels
	Other	Radiation hard, minimum 5-year lifetime at SEL2, Non-cryogenic operation preferable

Technology Component	Parameter	Required
Large-format High-Sensitivity UV Detectors for General Astrophysics	Operational Bandwidth	90 nm – 300 nm
	Read Noise	< 5 e^-
	Quantum Efficiency	> 70%
	Format	> 2k × 2k pixels
	Other	Radiation hard, minimum lifetime at SEL2, Non-cryogenic operation preferable, Visible blind