Introduction and goals

B. NASA Jet Propulsion Laboratory Mars Directorate Mars Sample Return electro-mechanical system to capture, retain, and re-orient an Orbital Sample (PhD thesis)

Supervisor:

- Prof. G. Genta, PoliTo (PhD thesis mentor)
- Joe Parrish, Deputy NASA JPL Program Manager - Mars Advanced Studies and Program Architecture, previous NASA Deputy Chief Technologist (PhD thesis co-mentor)

C. NASA JPL Mobility and Robotics System Section (347) projects

Supervisor:

- Dr. Adrian Stoica, JPL

2nd year activities

B. MOSST project (NASA MSR)

Mars On-Orbit Sample Transfer Technologies (MOSTT)

RendezVouz and Capture of Orbit Sample (ROCS)

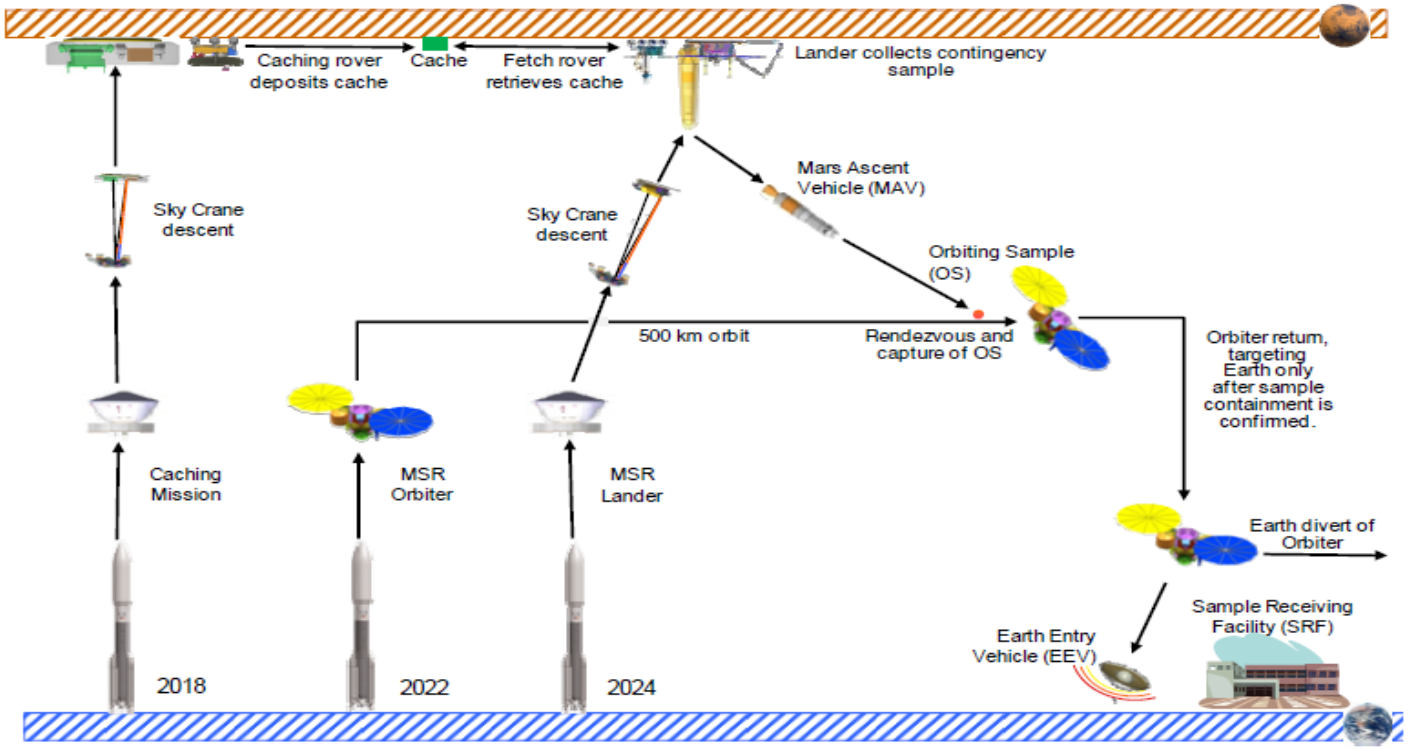

2nd year activities

B. MOSST project (NASA MSR)

Mars On-Orbit Sample Transfer Technologies (MOSTT)

RendezVouz and Capture of Orbit Sample (ROCS)

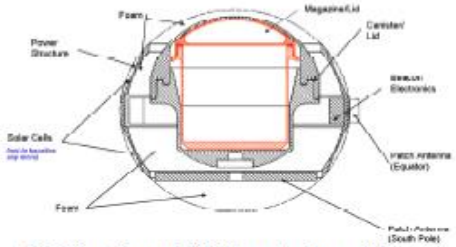

Orbiting Sample (OS) container with battery operated UHF low-duty cycle beacon (as backup)

Capture Basket concept testing on NASA C-9 zero-g aircraft

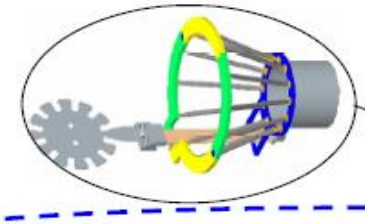

Orbiter tracks down and captures OS in 500 km circular orbit

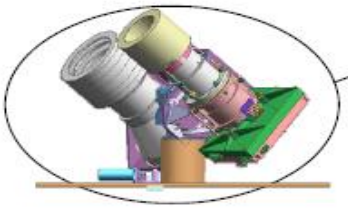

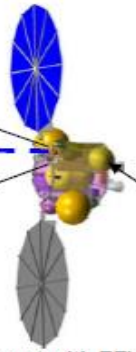

EEV

OpNav camera used for tracking, flown on MRO integrated with ST-6 Draper ISC (Inertial Stellar Compass) systems for rendezvous

Early orbiter concept with EEV. OS is transferred to EEV upon capture.

Artist's Concepts

Pre-Decisional Information -- For Planning and Discussion Purposes Only

2nd year activities

B. MOSST project (NASA MSR)

Mars On-Orbit Sample Transfer Technologies (MOSTT)

RendezVouz and Capture of Orbit Sample (ROCS)

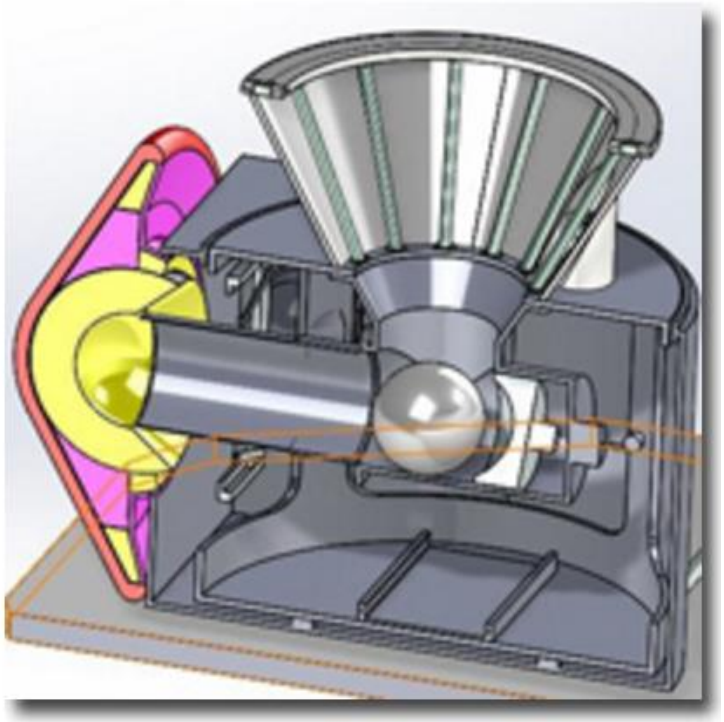

Artist's Concepts

PhD thesis structure:

1. Introduction about potential MSR
2. Problem description: retain, capture and re-orientation
3. System engineering concepts analysis
4. Concept solution designs and simulations
5. Concept solution test bed implementation: hardware & software
6. Concept solution tests
7. Results and discussion
8. Conclusions and future perspectives

PhD candidate: Marco Dolci

Reached goals

B. MOSTT project

PhD thesis structure:

1. **Introduction about potential MSR**
2. **Problem description: retain, capture and re-orientation**
3. **System engineering concepts analysis**
4. **Concept solution designs and simulations**
5. Concept solution test bed implementation: hardware & software
6. Concept solution tests
7. Results and discussion
8. Conclusions and future perspectives

- Worked as systems engineer & mechanical engineer in MOSTT team
- Attendance at Rendezvouz and Capture of the OS (ROCS) meeting in collaboration with JPL Mars Directorate Program Office
- Experience with SolidWorks, hardware (GD&T, 3D printers - Zortrax, MakerBot, Tinkerine), actuators, and team working
- Exposure to a real NASA mission baseline