Concept for Capturing and Docking Spacecraft with Flux-Pinned Interfaces

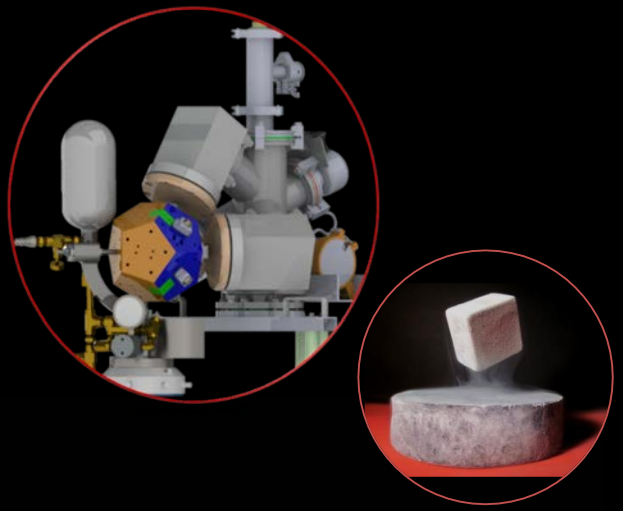

Laura Jones-Wilson
Jet Propulsion Laboratory, California Institute of Technology
and Cornell University

September 30th, 2016
IAC-16,C1,9,4,x32785

© 2016 California Institute of Technology. Government sponsorship acknowledged

Flux Pinning Basics

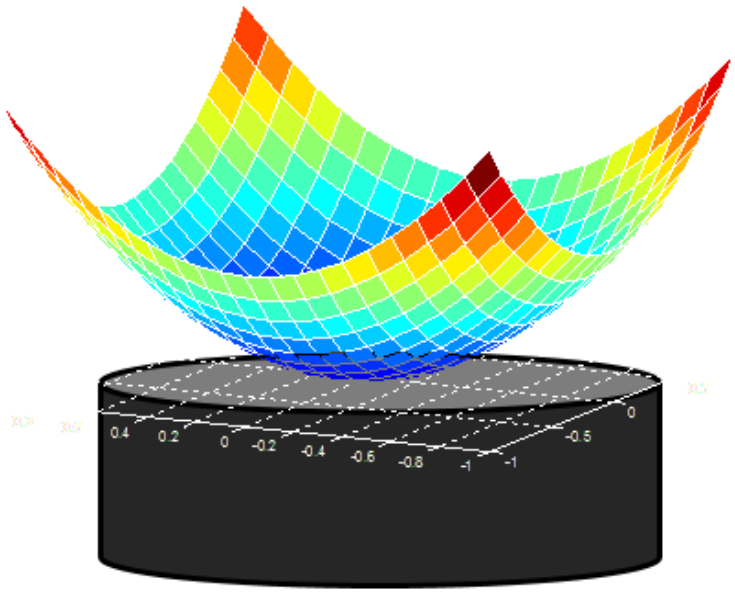

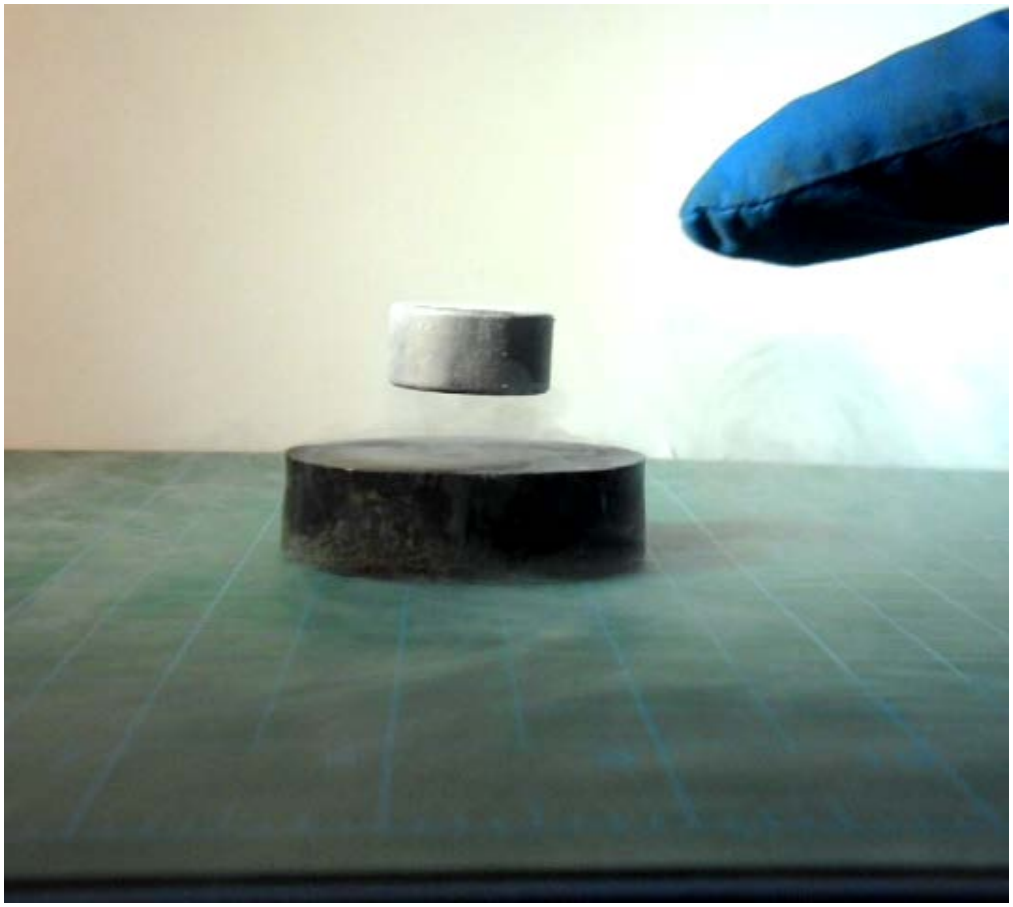

Motivation and Application

- Potential Mars Sample Return Mission
  - Could safely capture a cache holding Mars samples to a larger orbiting vehicle for return to Earth
- Flux pinning advantages:
  - Passive 6 DOF stability
  - Impact attenuation
  - Contactless position and reorientation

Artist's Concepts

Potential Orbiting Sample cache (OS)

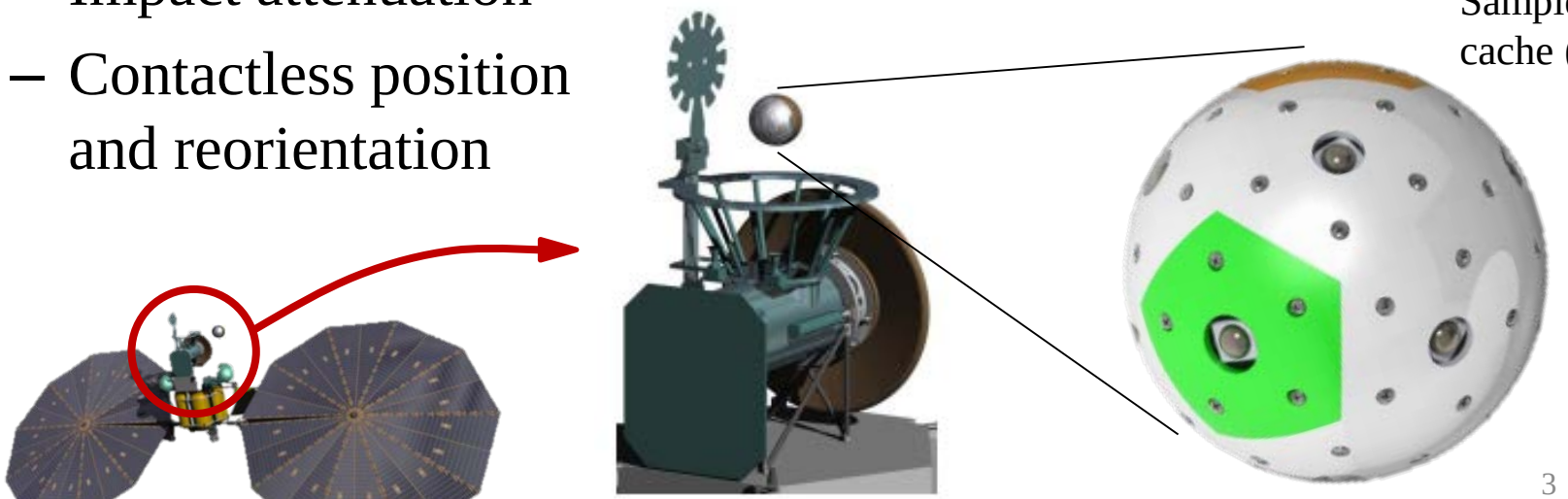

Potential Sample Return Orbiter (SRO)

Pre-Decisional Information – For Planning and Discussion Purposes Only

Goals and Roadmap

Goal: Characterize performance of flux pinned interface for spacecraft capture

- Experiments
  - Experiment Setup
  - Sphere of influence
  - Capture and Tumble
- Conclusions/Future Work
  - DOF testbed sensitivity
  - Flight traceability

Experiment Setup

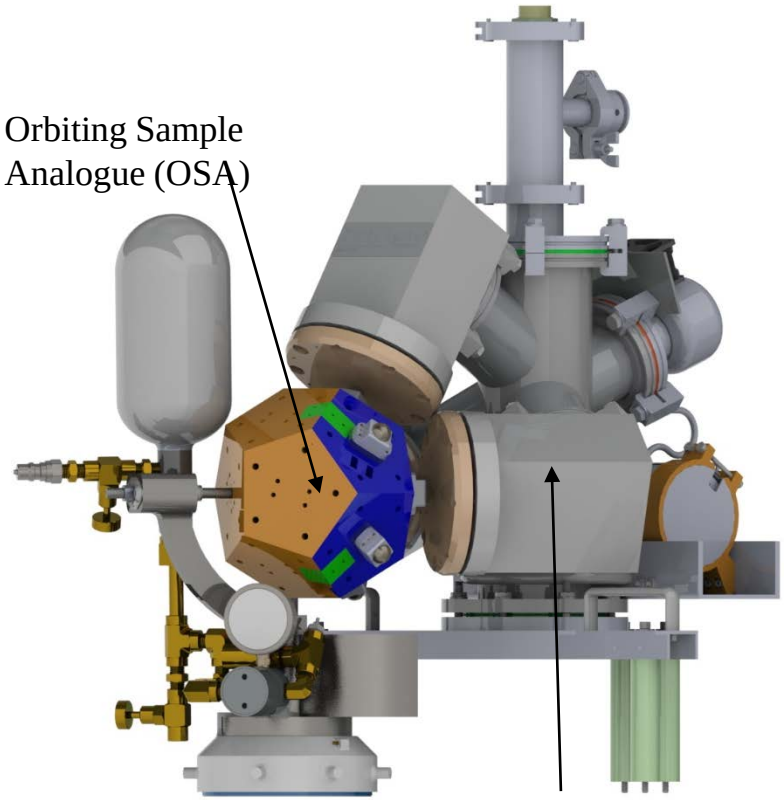

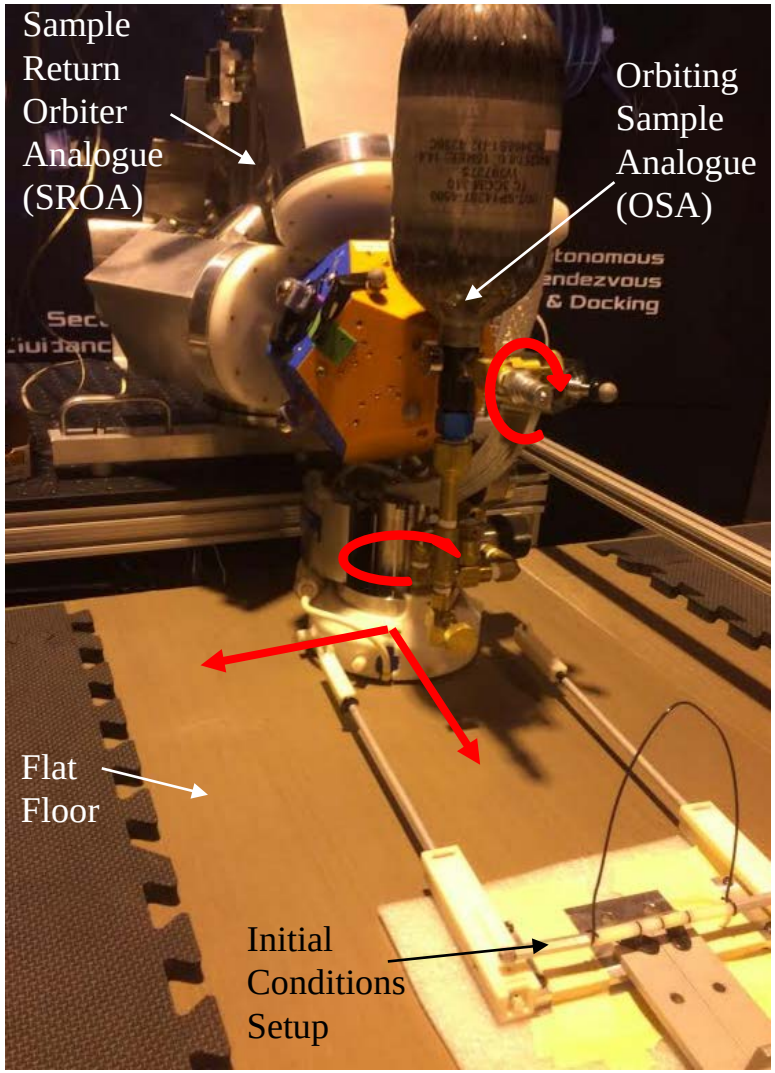

Sphere of Influence Experiment

- Investigate translational sphere of influence of flux pinning interface
- Record passive dynamics to refine translational modes in dynamic simulation

Top View

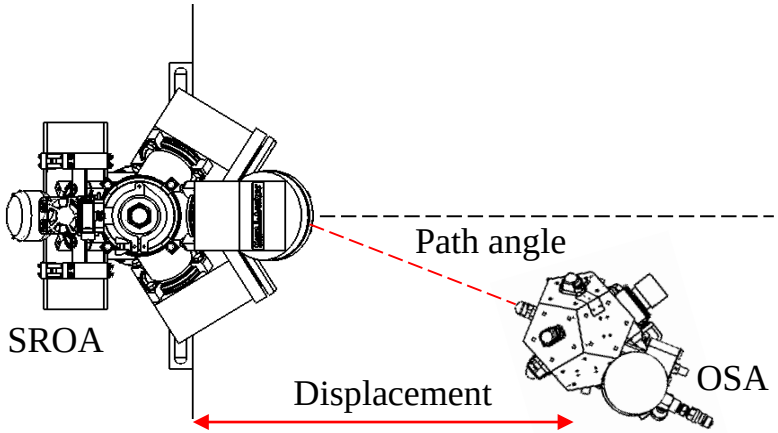

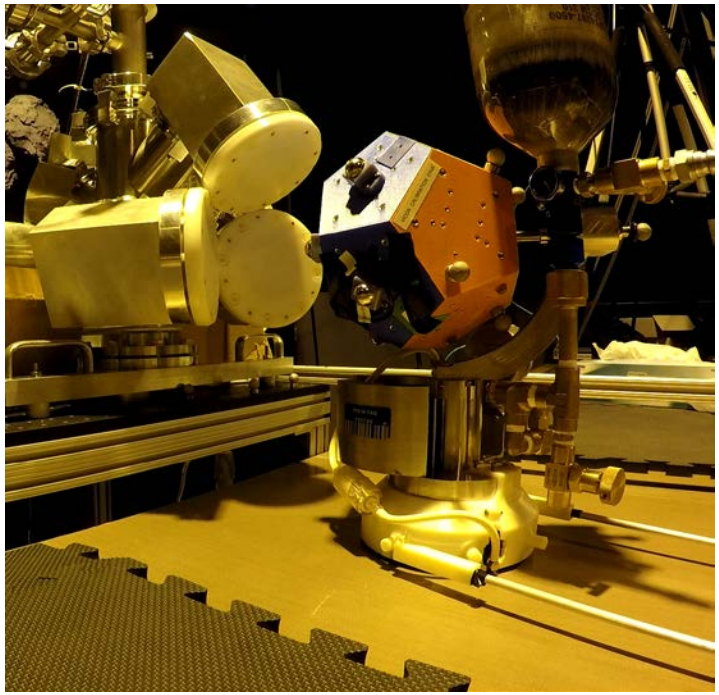

Sphere of Influence Results

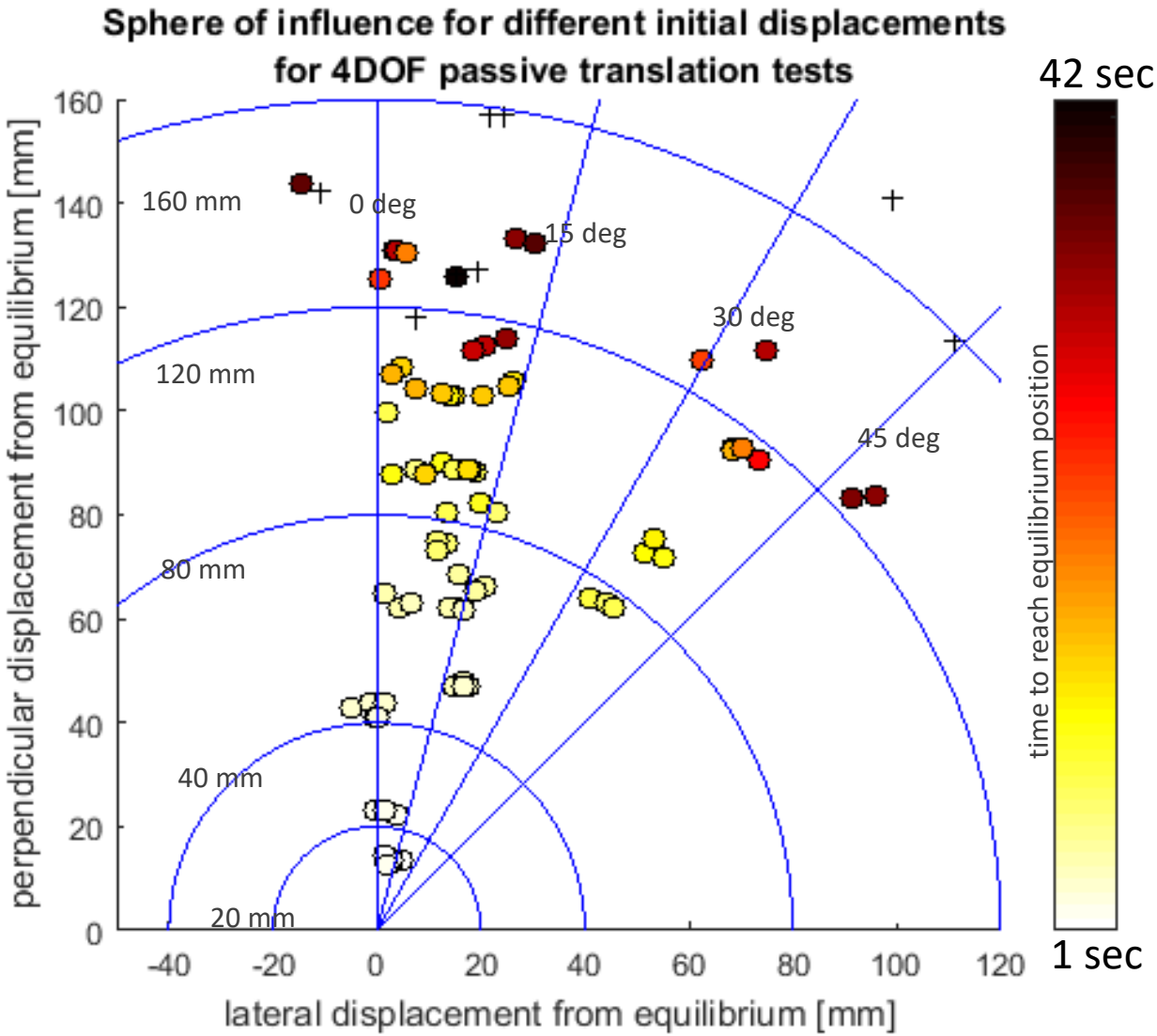

- Theoretically, action over an infinite distance, but in reality external effects limit influence
- Sphere of influence on 4DOF Test Bed: 12 cm

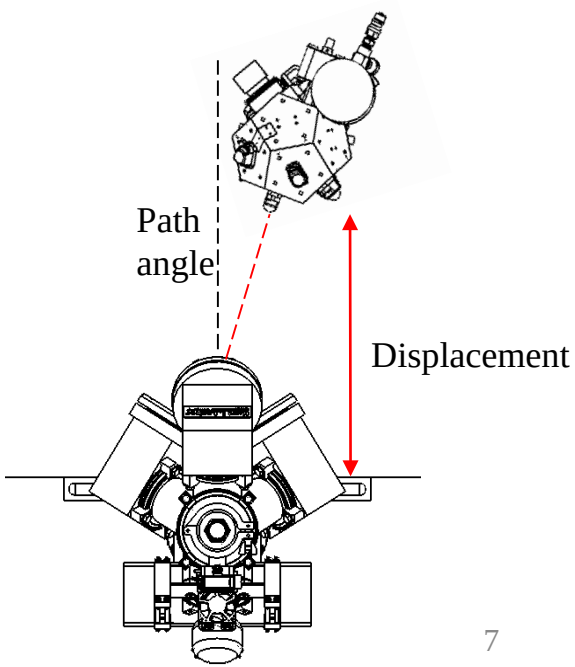

Sphere of Influence Results

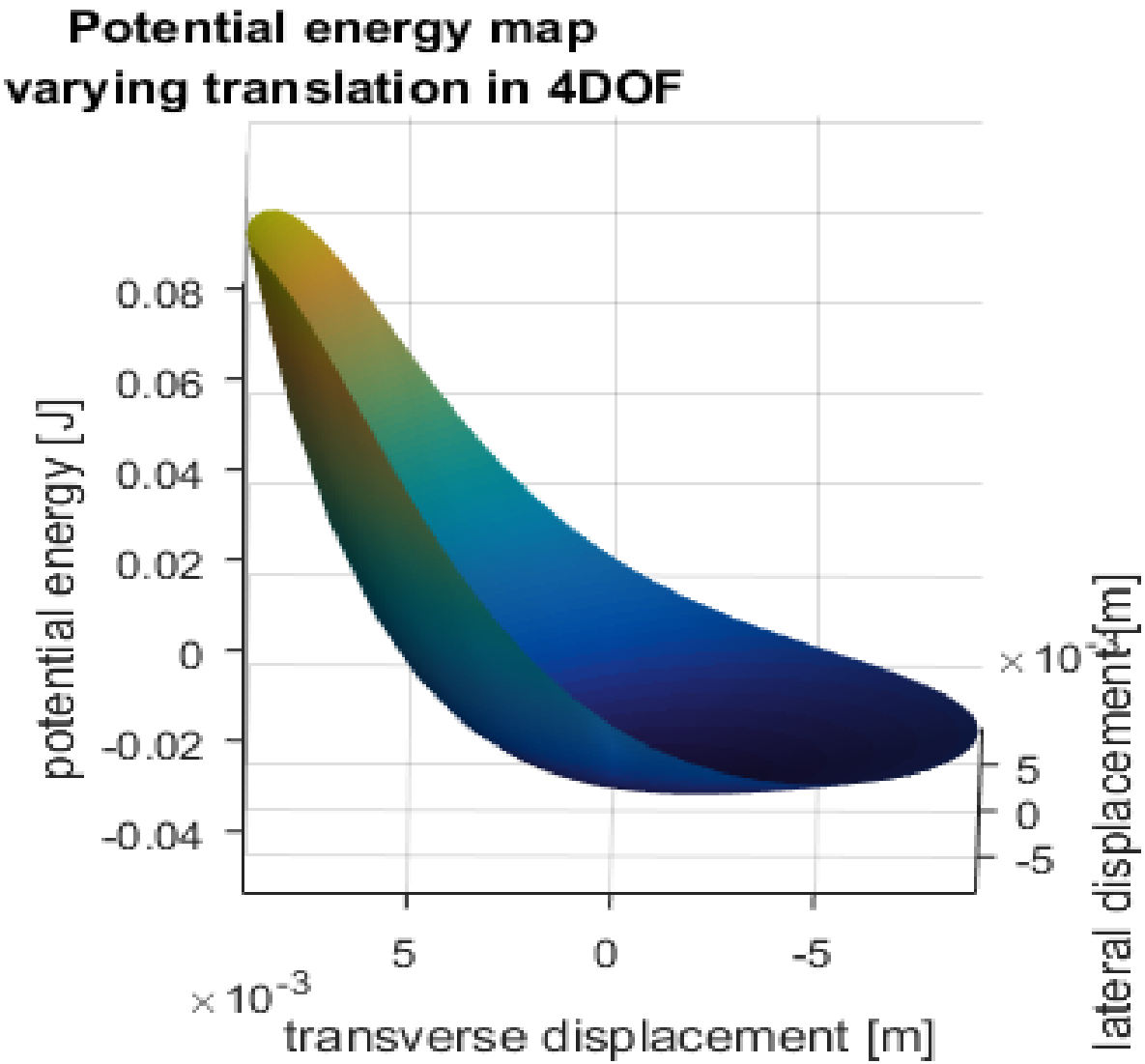

- Simulation predicted flux pinning force at edge of influence: $\sim 4.6 \times 10^{-3} N$
- Approximate force from LEO (ISS orbit) atmospheric drag: $\sim 1.1 \times 10^{-5} N$
- Approximate force from LEO solar radiation pressure: $\sim 1.8 \times 10^{-7} N$

Capture Experiments

- Investigate bounds of translational kinetic energy acceptable to successfully capture the OSA
- Map the shape and depth of the potential well embedded within the superconductors

Top View

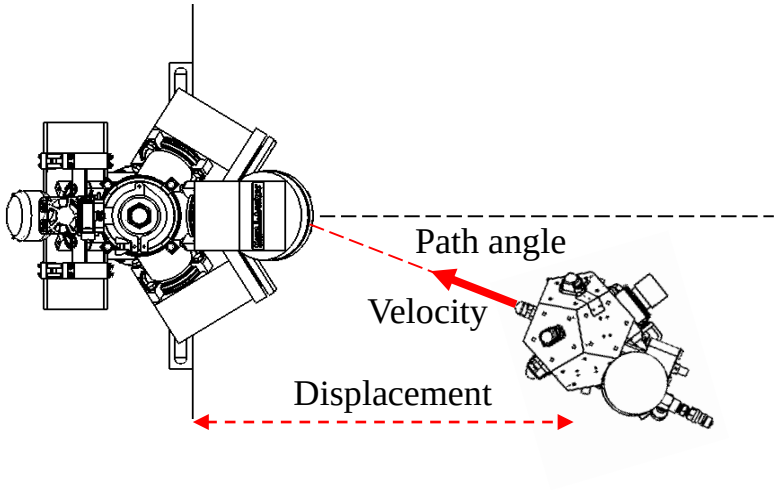

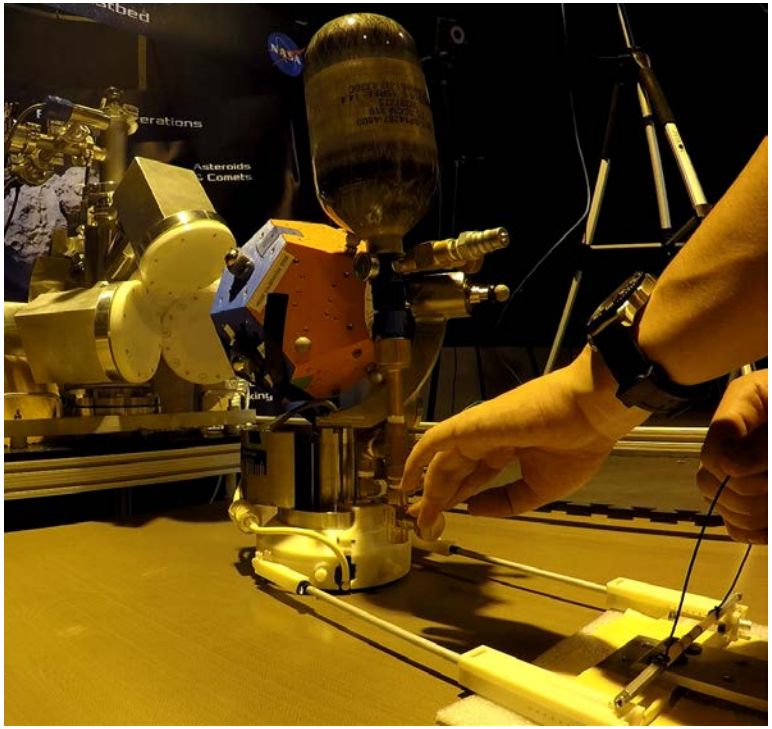

Tumble Experiments

- Investigate bounds of translational and rotational kinetic energy acceptable to successfully capture the OSA
- Map the shape and depth of the potential well embedded within the superconductors

Top View

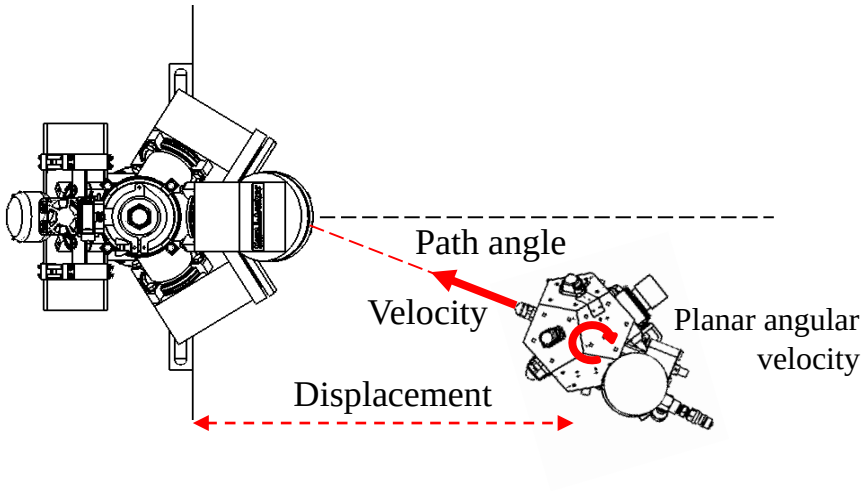

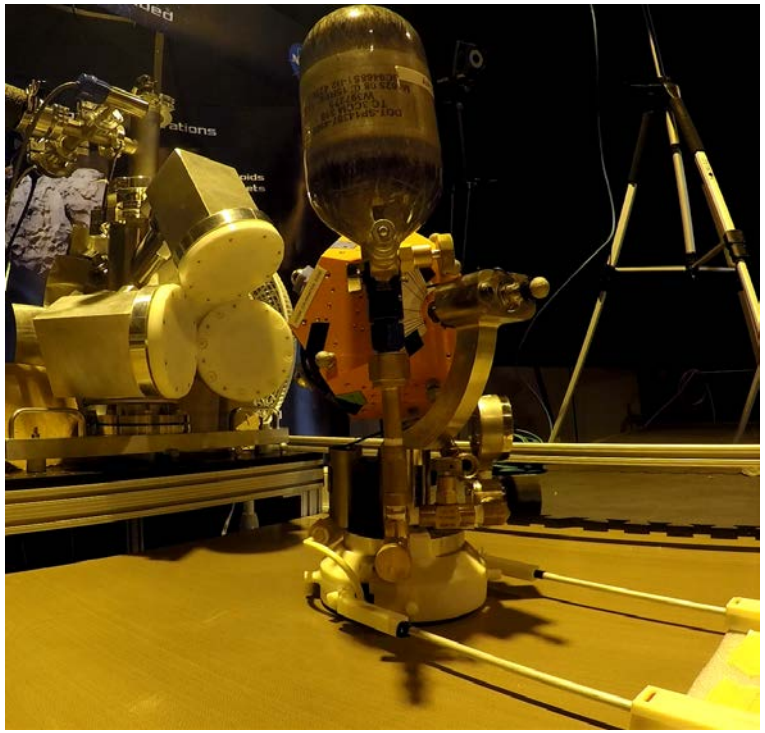

Capture and Tumble Results

- Capture performance with different initial velocities and angular velocities in 4 DOF

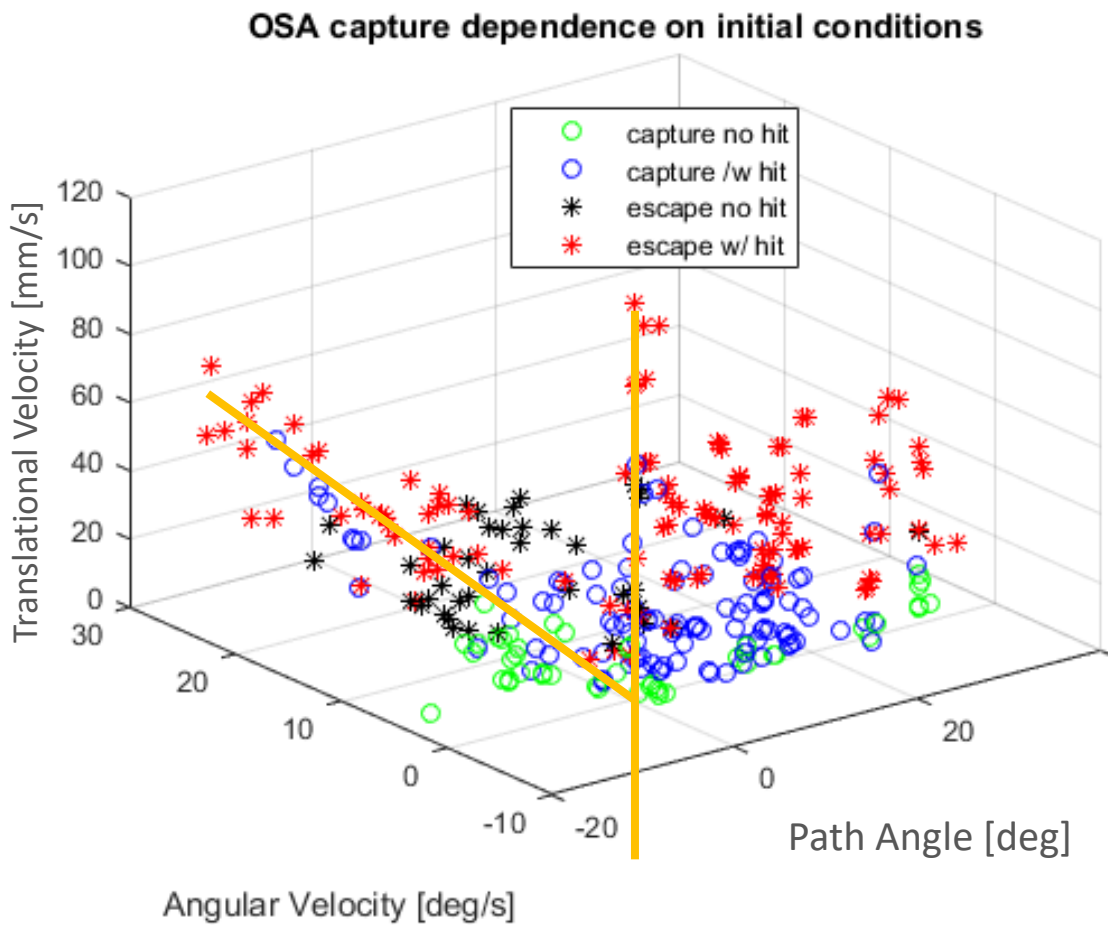

- Lower energy levels capture at a higher success rate
- Higher probability of capture at 0 degrees path angle
- More collision free interactions around 0 degrees

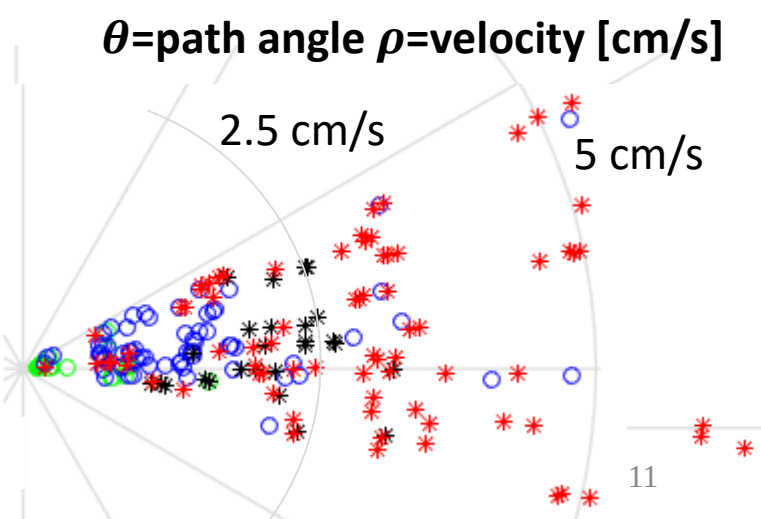

Capture and Tumble Results

- Lower energy levels: up to 10 deg/s or 2 cm/s, corresponding to 0.01 J
- 0 degrees path angle higher energy: up to 20 deg/sec or 7 cm/s, corresponding to 0.05 J
- More collision free interactions at a low amount of angular velocity

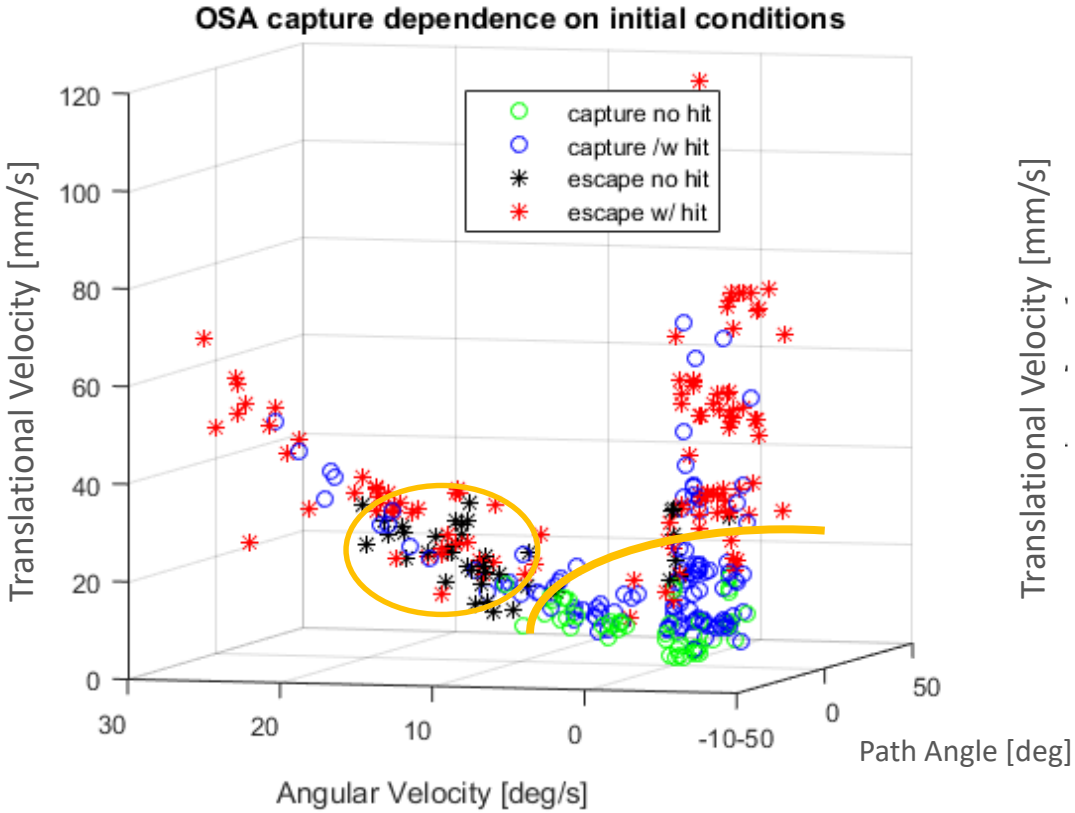

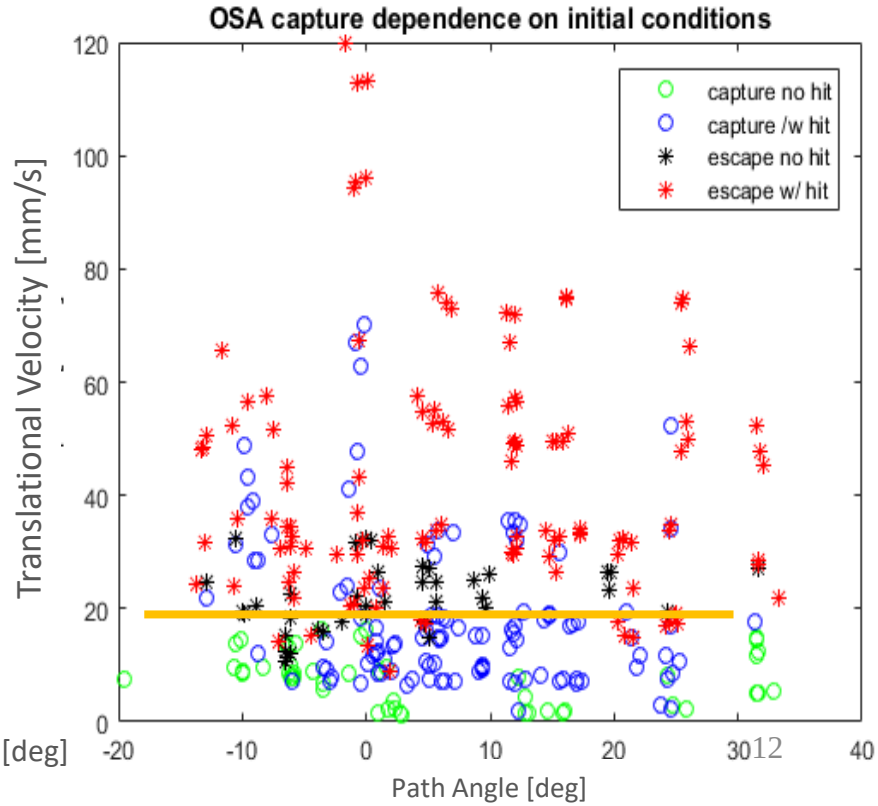

Flight Traceability

- Projected sphere of influence in spaceflight environments:
  - LEO: ~25 cm
  - Mars orbit: ~50 cm
- Projected spaceflight capture capabilities based on 4DOF:
  - Reliably: up to 4.7 cm/s or 24 deg/s
  - 0 deg path angle: up to 16.7 cm/s or 47 deg/sec

Testbed DOF Sensitivity

- 4DOF vs 3DOF testbed sensitivity
  - 3DOF configuration locks the rotation about the shaft
  - 3DOF significantly lowers the energy bound for successful capture
  - No 0 degree preference in 3DOF
  - Interactions in 3DOF mainly involved collisions

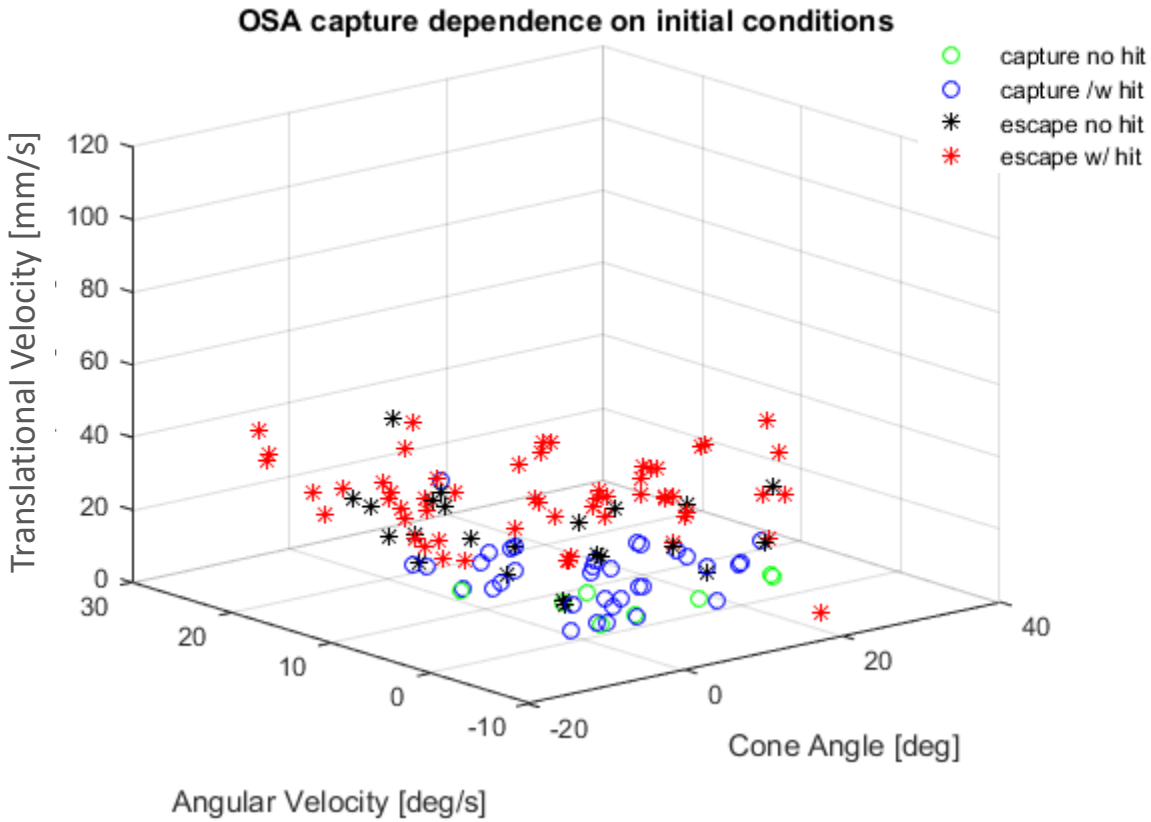

QUESTIONS?