Jet Propulsion Laboratory
California Institute of Technology

Mars 2020 Project Overview

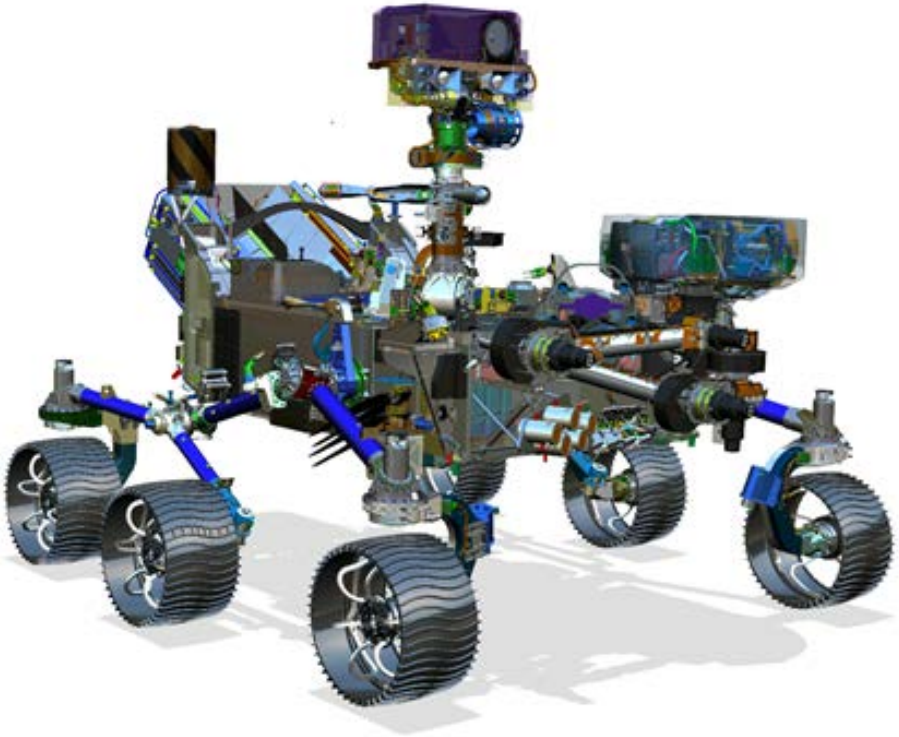

John McNamee
Mars 2020 Project Manager

September 14, 2016

Mars Exploration in This Decade

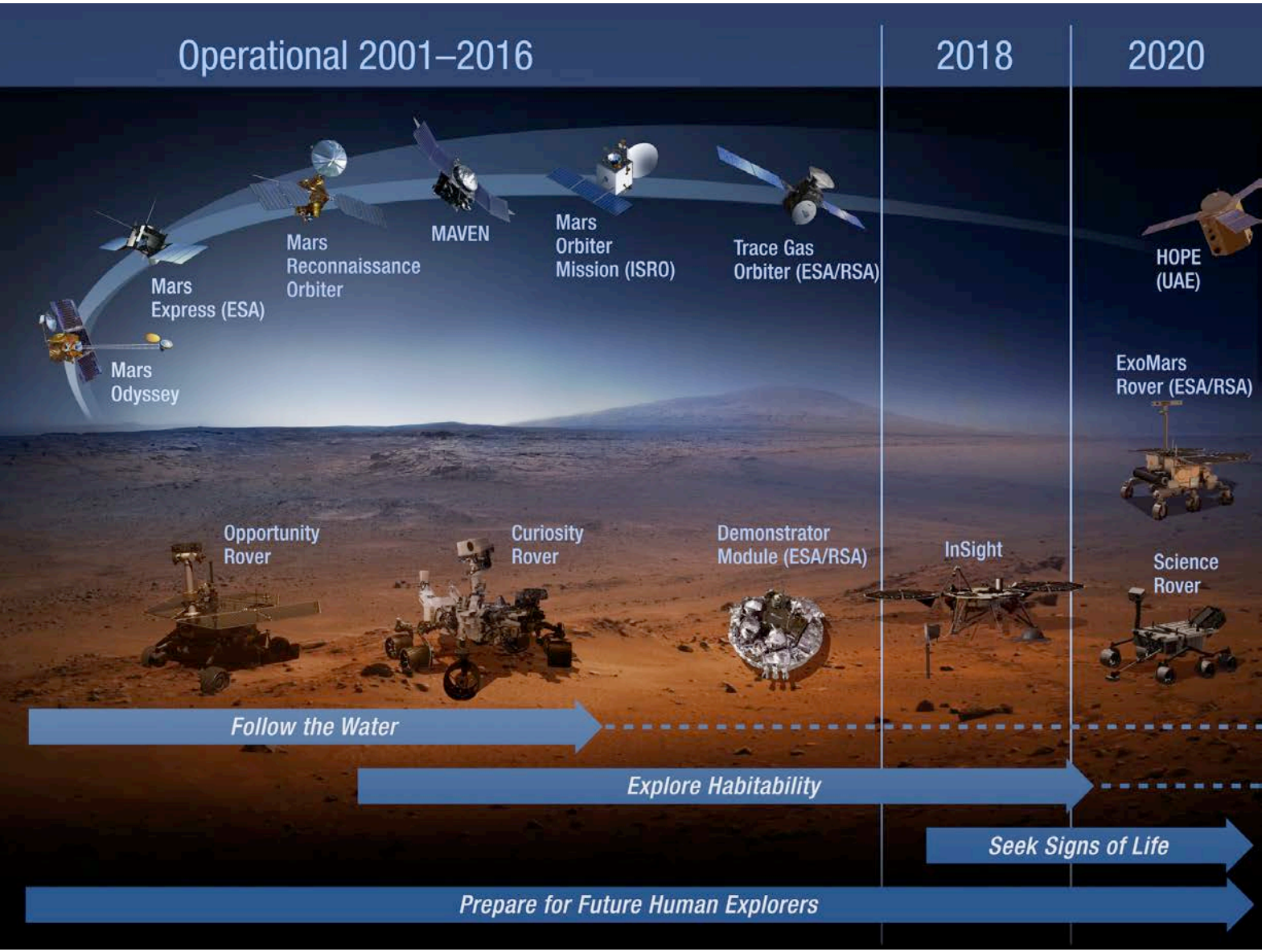

Mars 2020 mission builds on the legacy of NASA's Mars Exploration Program, addressing the highest priority science of preparing samples for possible return to Earth

Mars 2020 Science

Mars 2020 Mission Objectives

- **Conduct Rigorous *In Situ* Science**

  A. **Geologic Context and History** Carry out an integrated set of context, contact, and spatially-coordinated measurements to characterize the geology of the landing site

  B. **In Situ Astrobiology** Using the geologic context as a foundation, find and characterize **ancient** habitable environments, identify rocks with the highest chance of preserving **signs** of **ancient** Martian life if it were present, and within those environments, seek the signs of life

- **Enable the Future**

  C. **Sample Return** Assemble rigorously documented and returnable cached samples for possible return to Earth

  D. **Human Exploration** Facilitate future human exploration by making significant progress towards filling major strategic knowledge gaps and…

  Technology …demonstrate technology required for future Mars exploration

- **Execute Within Current Financial Realities**

  – Utilize MSL-heritage design and a moderate instrument suite to stay within the resource constraints specified by NASA

These are a thoroughly integrated set of objectives to support Agency's Journey to Mars

Scientific Overview

Although we rely on a heritage approach to the vehicle,
Mars 2020 is a new and distinct type of planetary mission.

We will use our payload to explore a new region of Mars,
and to support the selection of samples that, *if successfully returned to Earth,*
would provide material for generations of planetary scientists.

For previous Mars rover mission (e.g. Curiosity), *sampling results support the scientific exploration objectives*.

For Mars 2020, the first step towards a possible Mars sample return,
scientific exploration results support sample caching.

Mars 2020 Payload Family Picture

Jet Propulsion Laboratory
California Institute of Technology
Mars 2020 Project

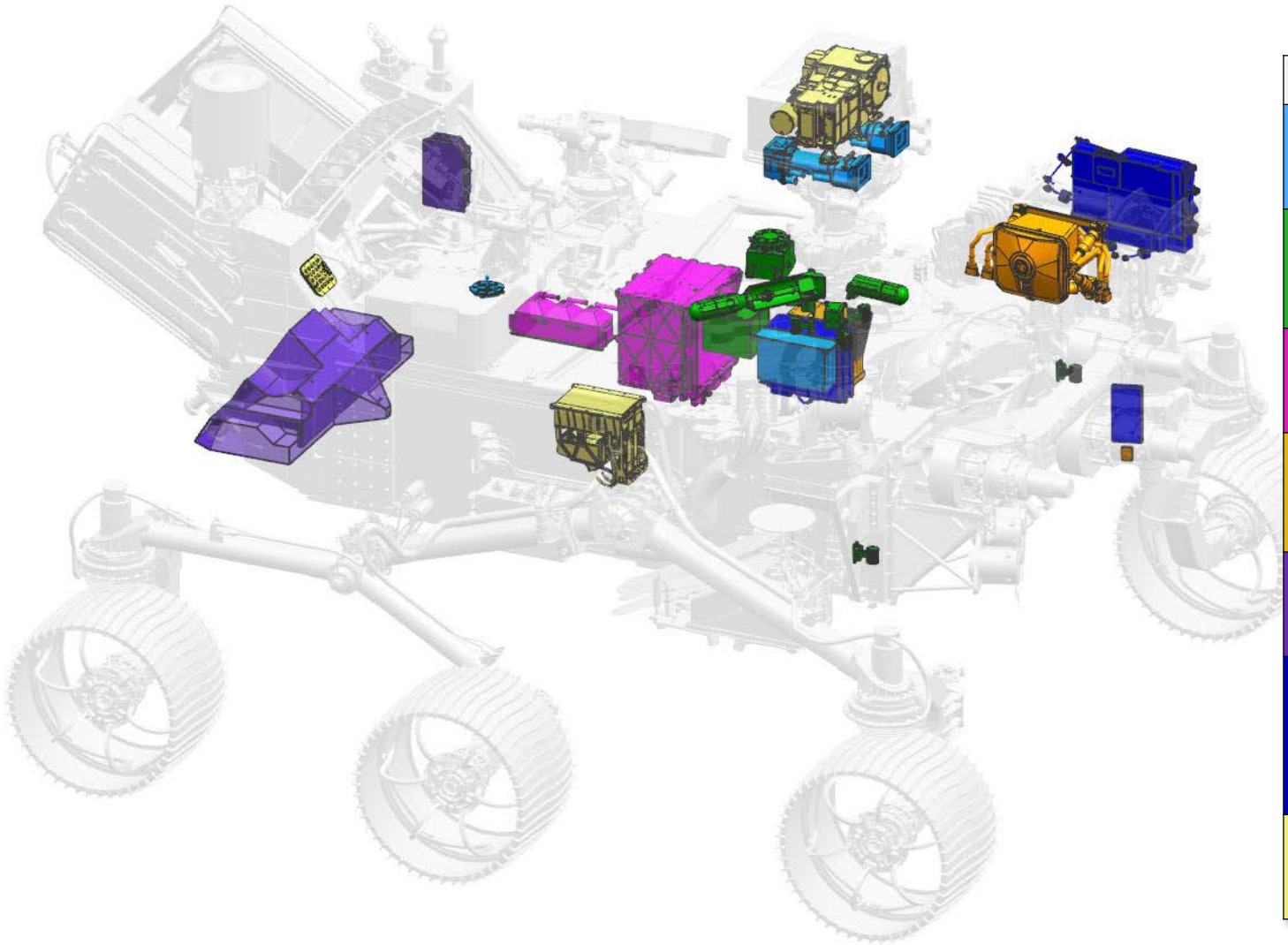

Instrument Key
Mastcam-Z Stereo Imager
MEDA Mars Environmental Measurement
MOXIE In-Situ Oxygen Production
PIXL Microfocus X-ray fluorescence spectrometer
RIMFAX Ground Penetrating Radar
SHERLOC Fluorescence and Raman spectrometer and Visible context imaging
SuperCam LIBS and Raman

Scientific Exploration Model

Develop the geologic and astrobiologic context of an ancient martian environment using observations made at a range of spatial scales, culminating in a search for potential biosignatures. Use the emerging model of deposition and alteration to guide the collection of samples that maximize opportunities to understand Mars as a planetary system and determine whether it was once inhabited.

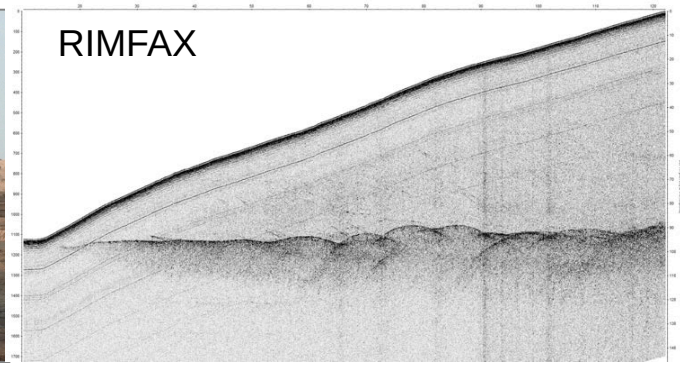

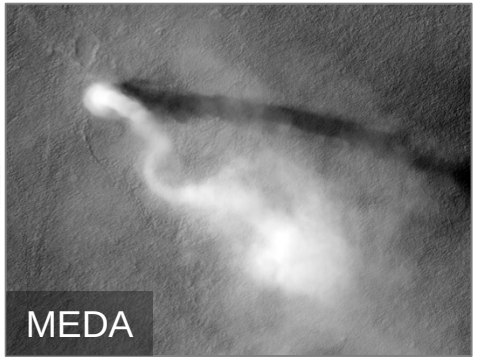

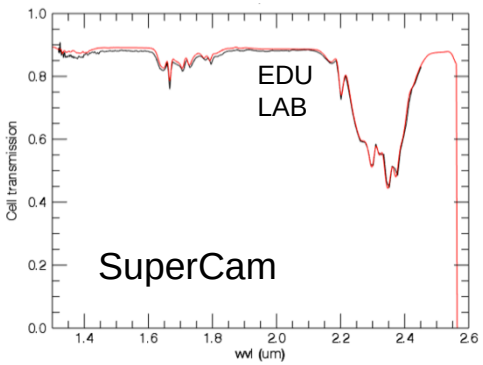

remote chemistry / mineralogy

proximity imaging

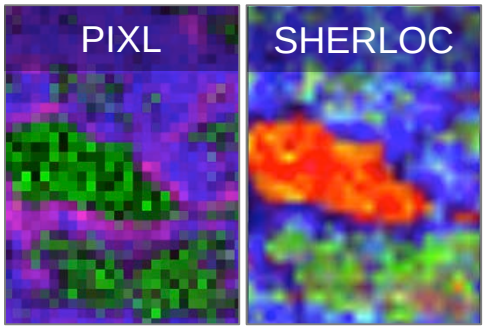

proximity chemical / mineral mapping

sampling and borehole science

Project Overview

Mars 2020 Rover Concept

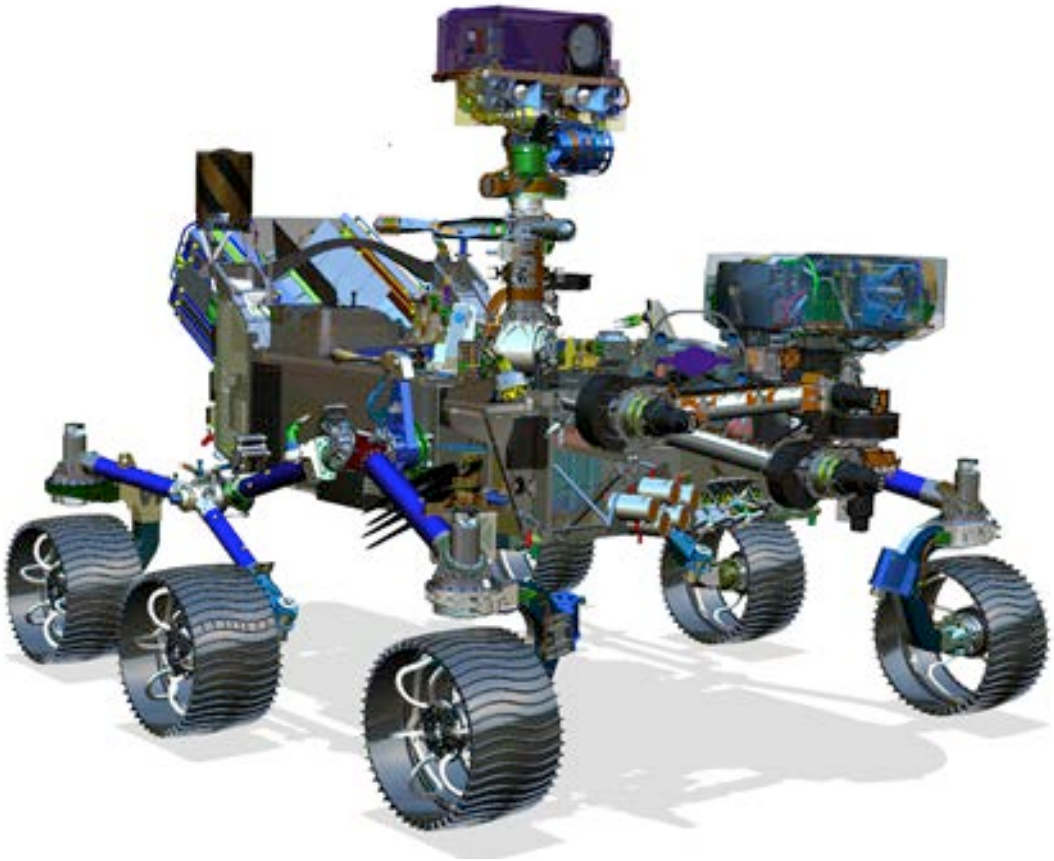

Stays the Same as MSL

- Avionics
- Power
- GN&C
- Telecom
- Thermal
- Mobility

Changed

- New Science Instrument Suite
- New Sampling Caching System
- Modified Chassis
- Modified Rover Harness
- Modified Surface FSW
- Modified Rover Motor Controller
- Modified Wheels

Expected to Change

- Some Mobility components (to support wheel and/or Rover mass)

Mars 2020 Rover Concept

Multi-Mission Radioisotope Thermoelectric Generator (MMRTG) provides heat and electricity for rover operations

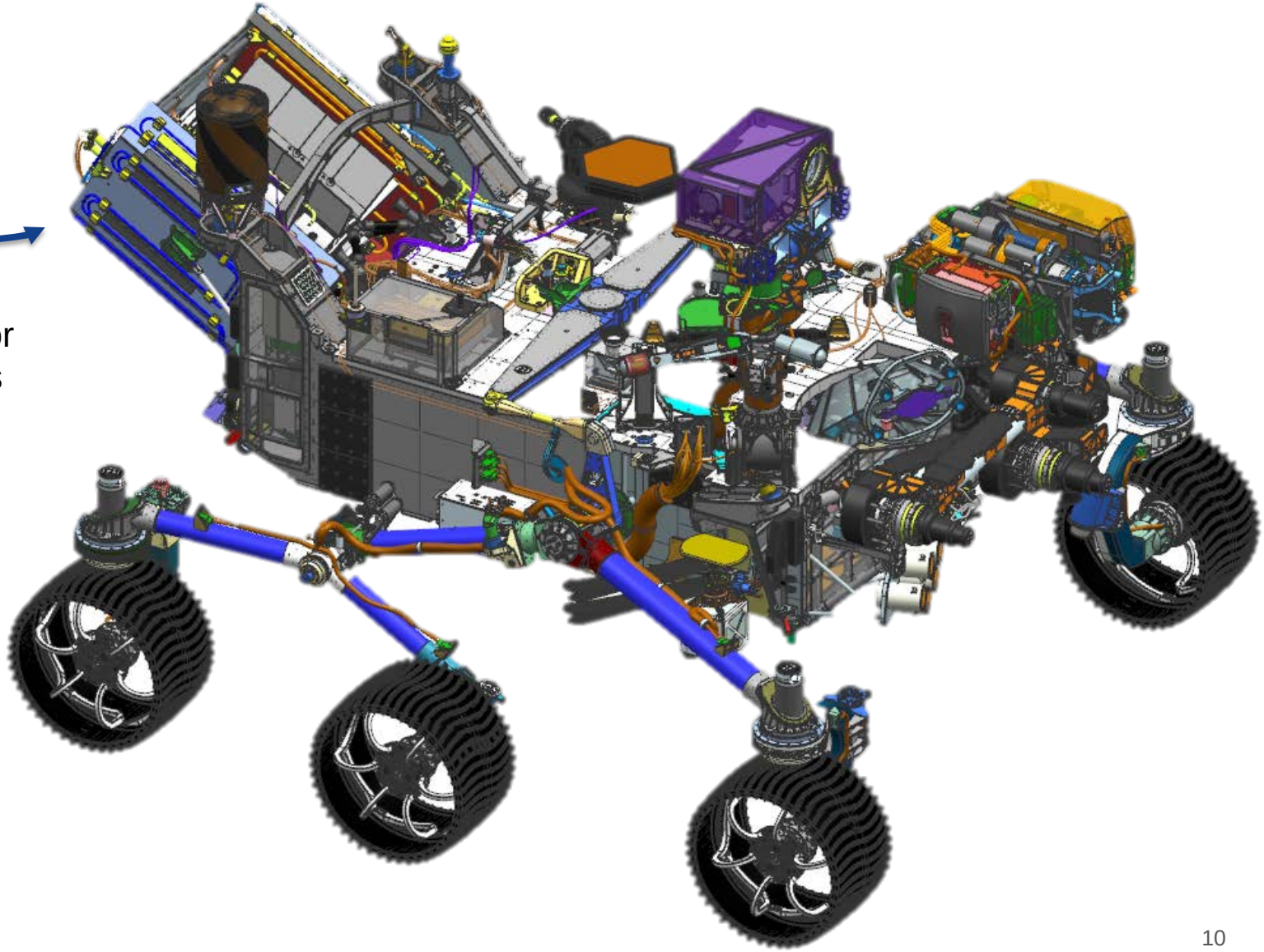

Sampling & Caching Subsystem

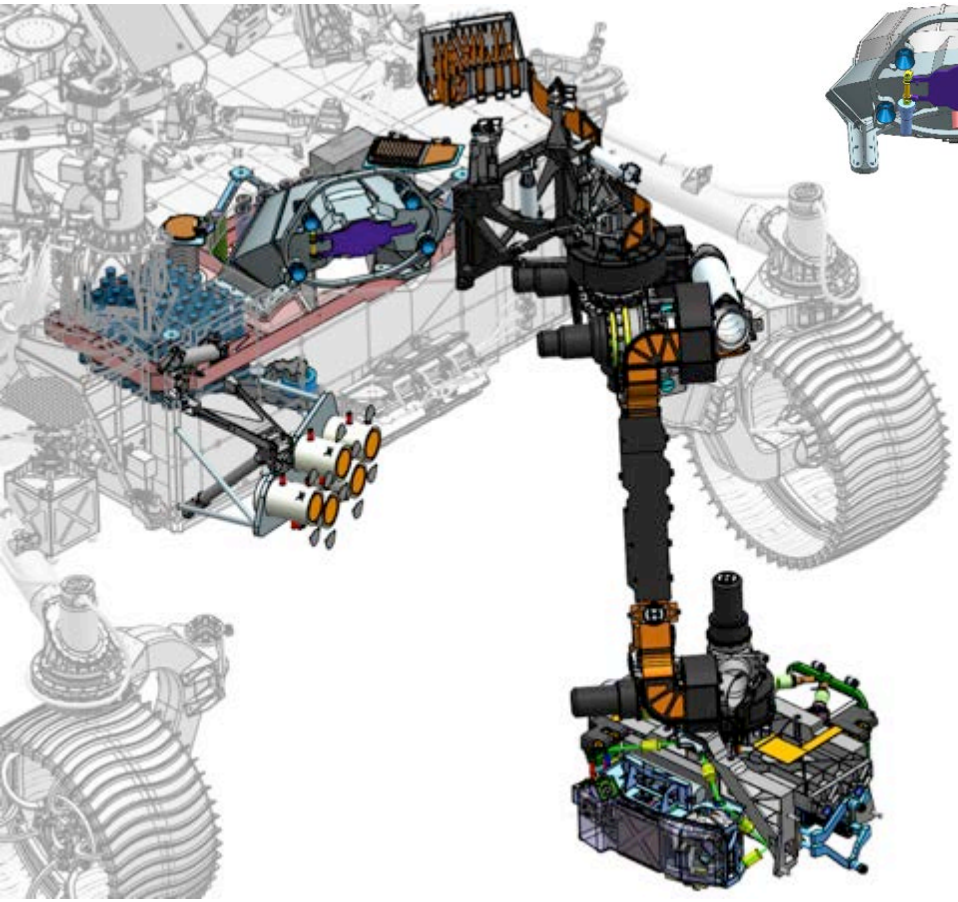

Bit Carousel

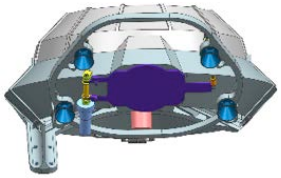

Caching Assembly

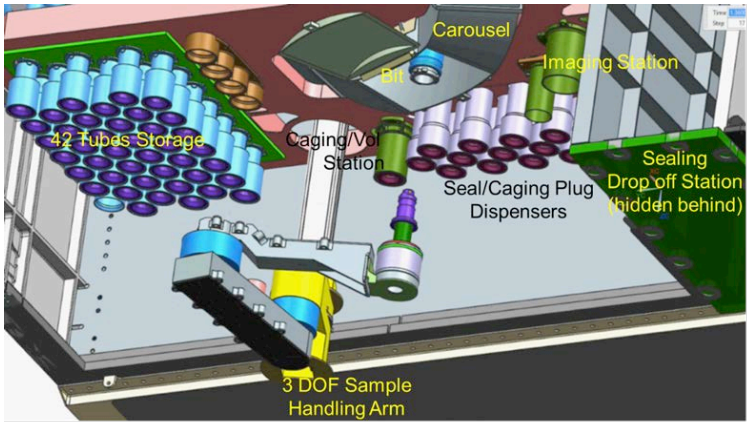

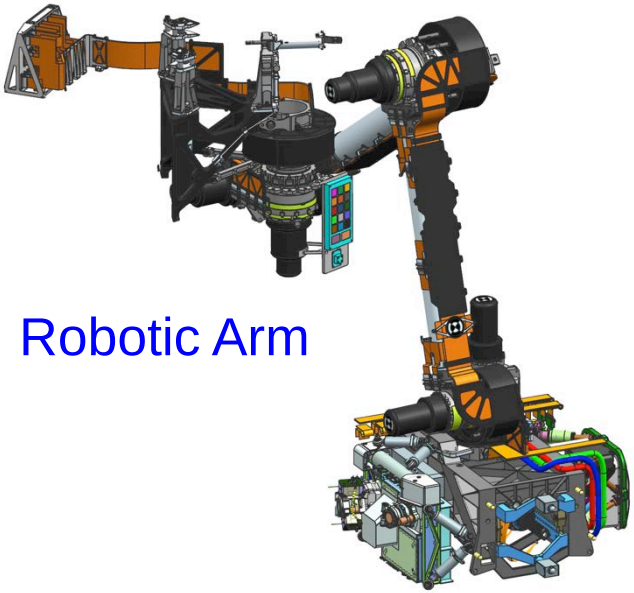

Robotic Arm

Turret w/corer

Additional Technology Objectives

Jet Propulsion Laboratory
California Institute of Technology
Mars 2020 Project

Terrain Relative Navigation

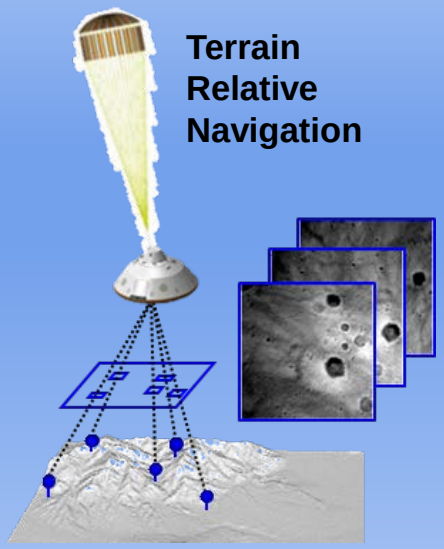

Weather & Dust - MEDA

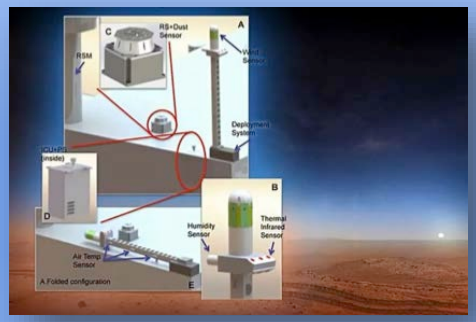

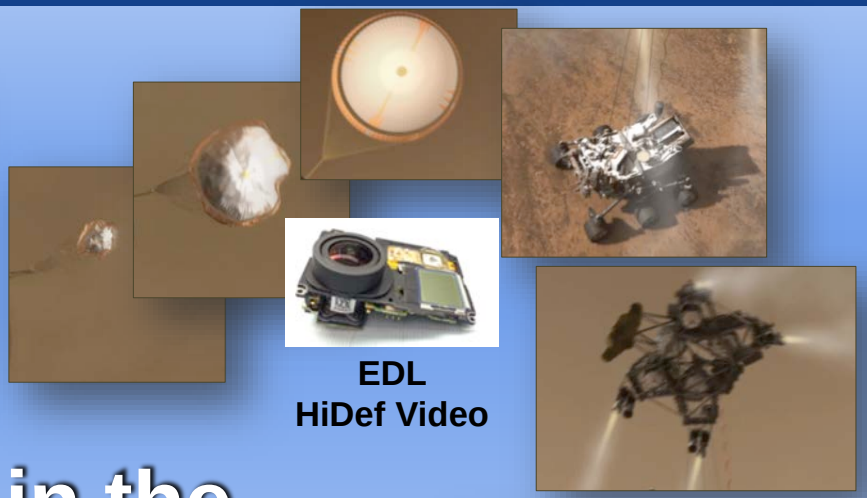

EDL HiDef Video

Investing in the Future

First Recorded Sounds from Mars

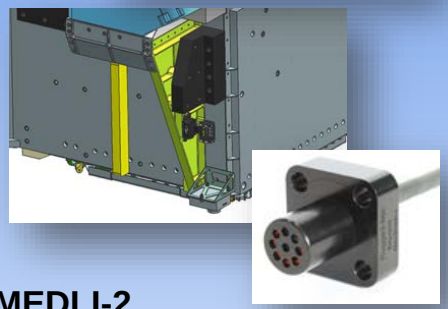

Oxygen Generation - MOXIE

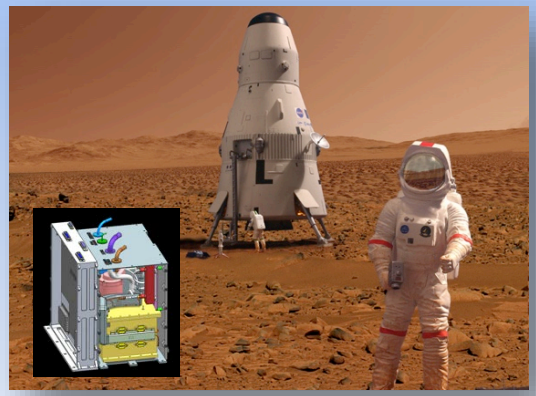

Aerial Reconnaissance
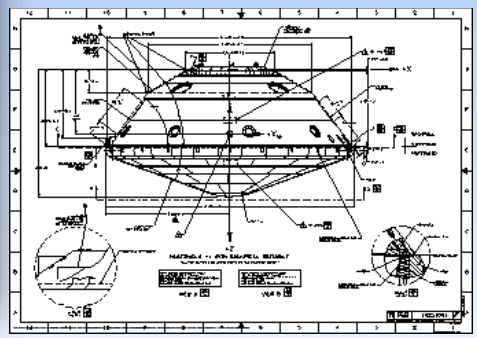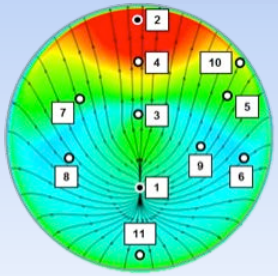
Aeroshell Instrumentation – MEDLI-2