Jet Propulsion Laboratory
California Institute of Technology

Year Four on Mars: An Update on the MMRTG Powering the Curiosity Rover

David Woerner
Jet Propulsion Laboratory, California Institute of Technology

September 21, 2016

© 2016 California Institute of Technology. Government sponsorship acknowledged.

Agenda

- Mars Science Laboratory surface mission
- The MMRTG
- The thermal environment on Mars
- Power fluctuations and average power
- Energy for science
- Conclusion

RTG – Radioisotope Thermoelectric Generator

Mars Science Laboratory

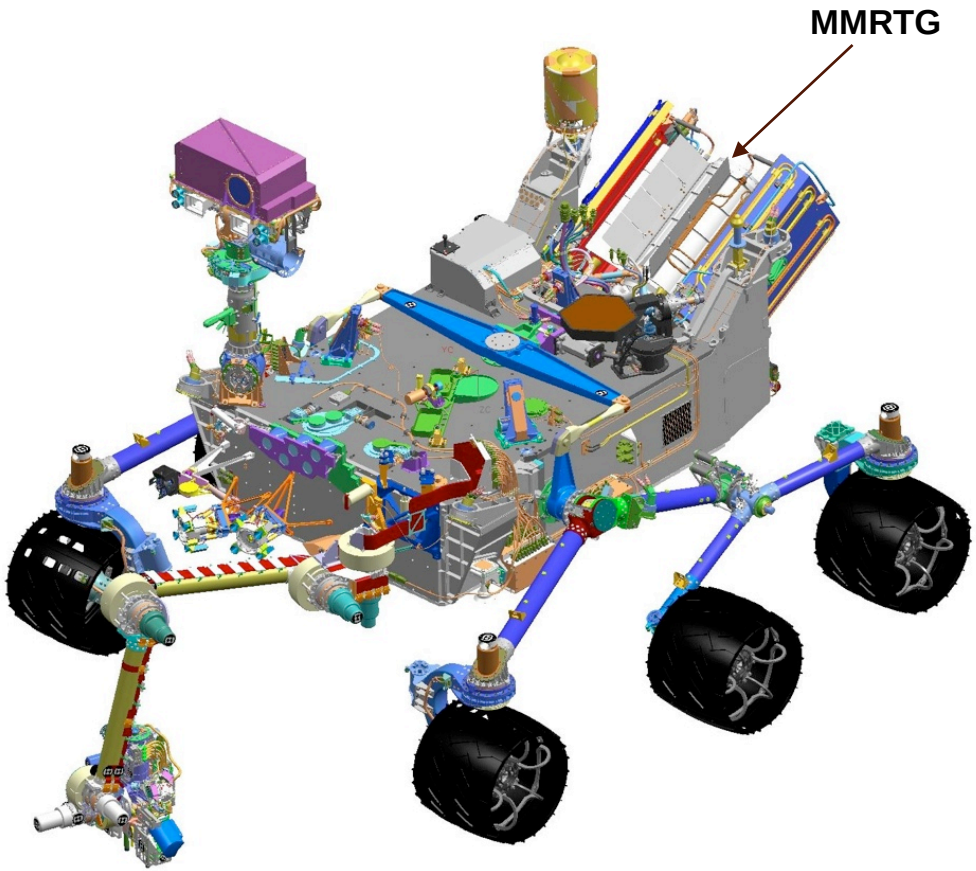

Mars Science Laboratory surface mission

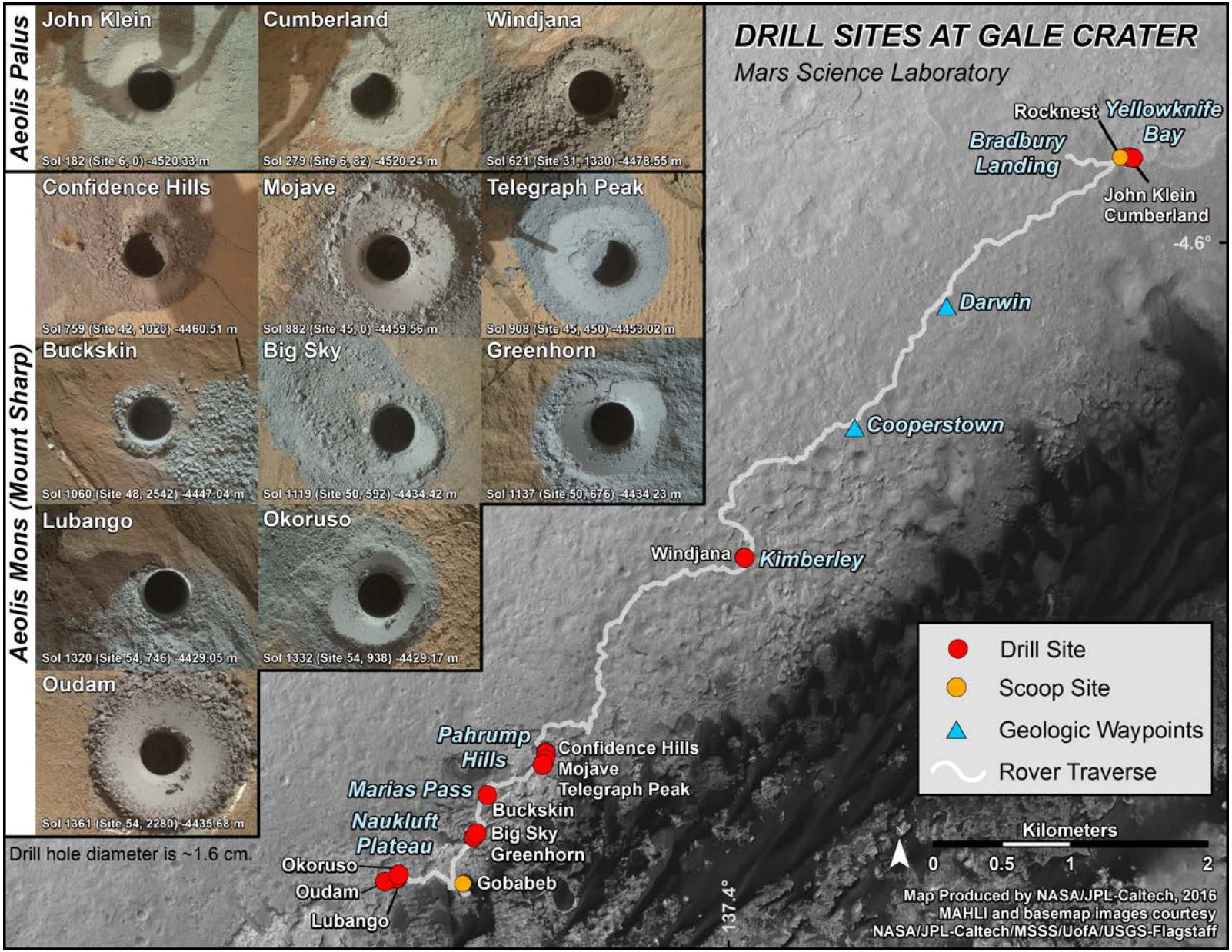

Mars Science Laboratory Surface Mission

Curiosity Rover:

MSL Launched	Nov 26, 2011
Landed	Aug 5, 2012
End of Primary Mission	Aug 6, 2014
End of First Extended Mission	Sep 24, 2016
Region of Mars:	Mt. Sharp

Time on Mars:	1442 sols
Distance driven:	13.93 km (8.65 miles)
Velocity:	9 meters/sol
Thermal cycles:	1442 (@ ~20-25° C)

MER Spirit Rover:

Landed:	January 4, 2004
End of Mission:	May 25, 2011
Region of Mars:	
Time on Mars:	2623 sols
Spirit also logged:	7.73 km (4.8 mi)
Velocity:	~ 3 meters/sol

RTG Primer

- *The DOE has produced a variety of RTGs that have been designed and flown over the last 5 decades by NASA.*
- *Only the MMRTG can be procured today.*

- No moving parts
- An MMRTG weighs approximately 45 kg and produces 110W at launch.

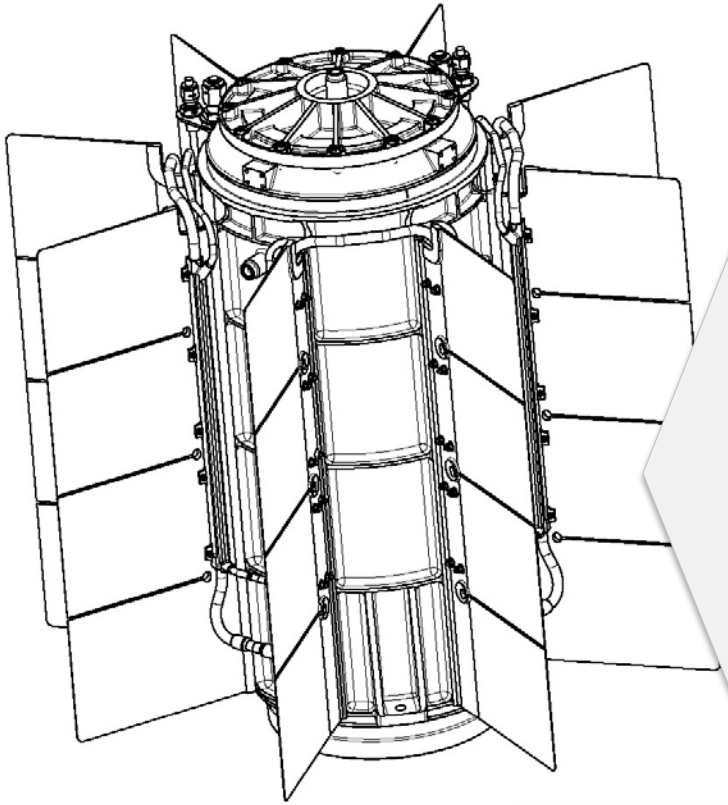

MMRTG

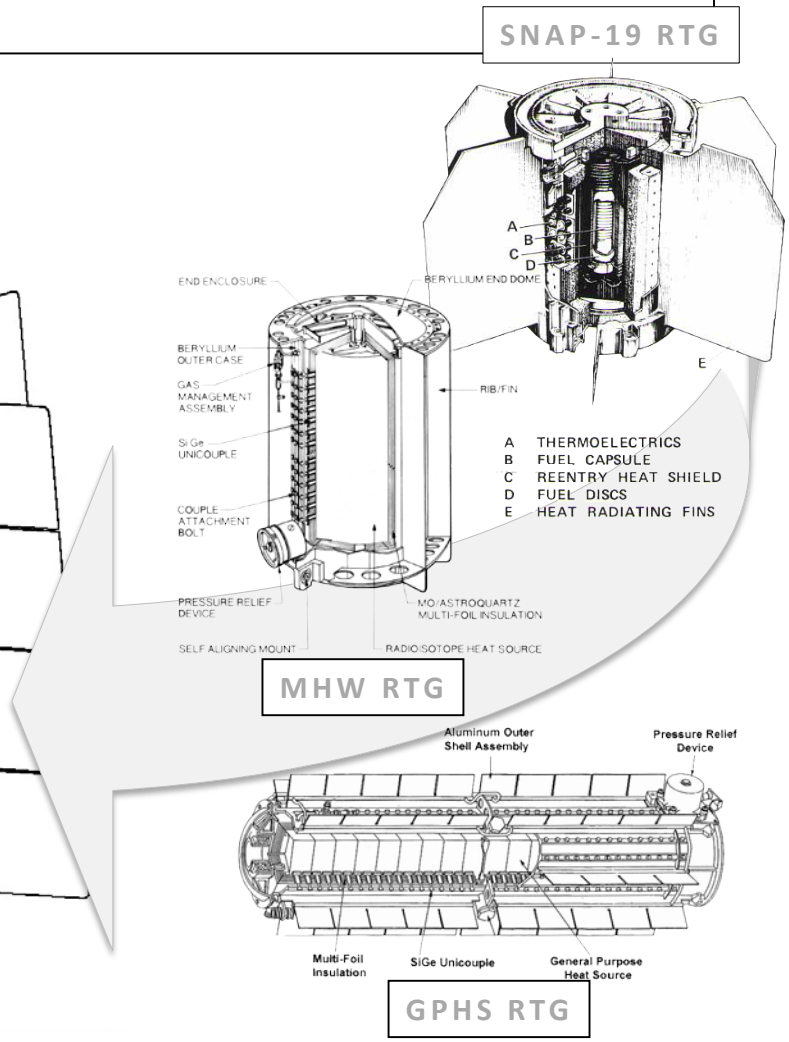

RTG – Radioisotope Thermoelectric Generator

Heat Sources for RPS

- DOE has developed the heat source for RTGs:
  - The General Purpose Heat Source (GPHS), 244-256 Wth, BOL

GPHS

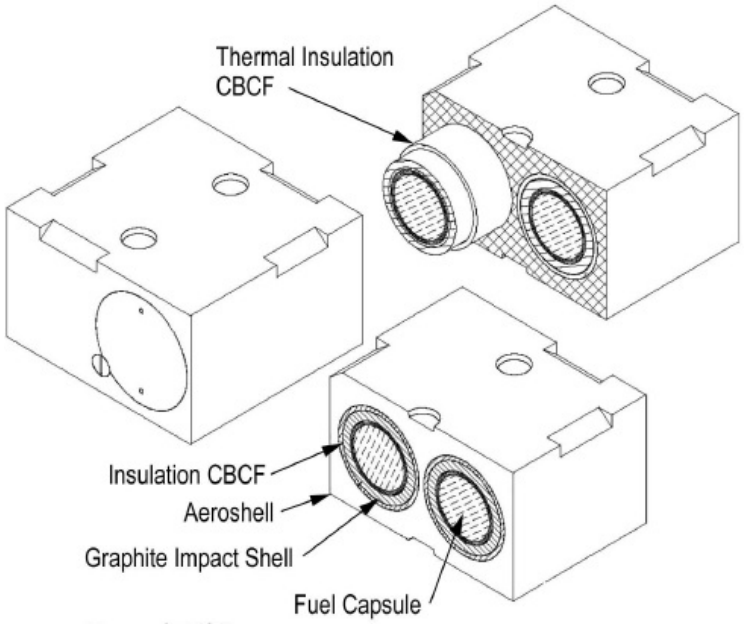

MMRTG Thermoelectric Couple

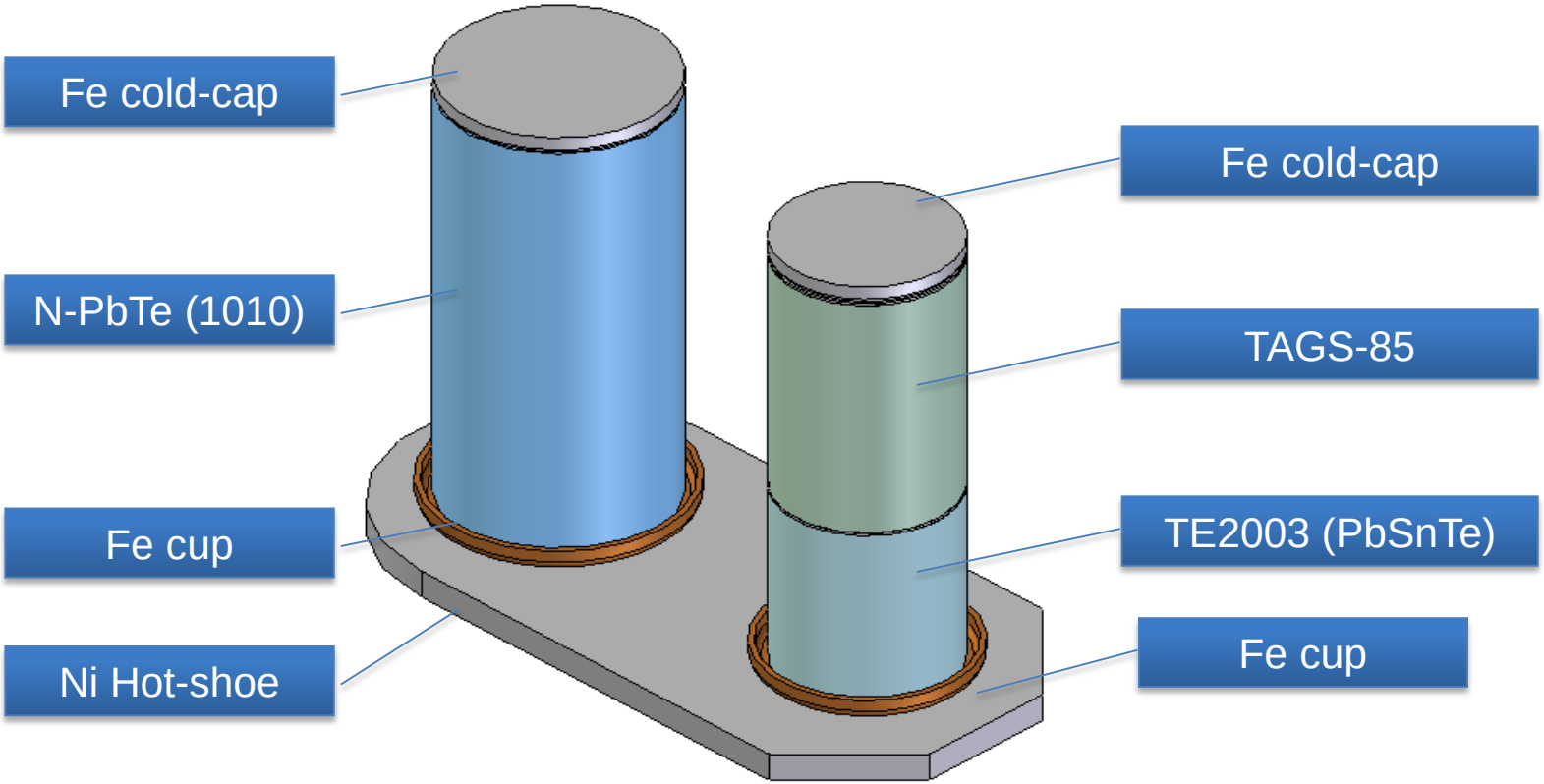

Production of Electricity is via Thermoelectric Couples

The Couples are bound into modules and the modules replicated throughout the generator.

Notes

- Module bar made from beryllium
- Spring and piston hold module in place
- 48 couples per module

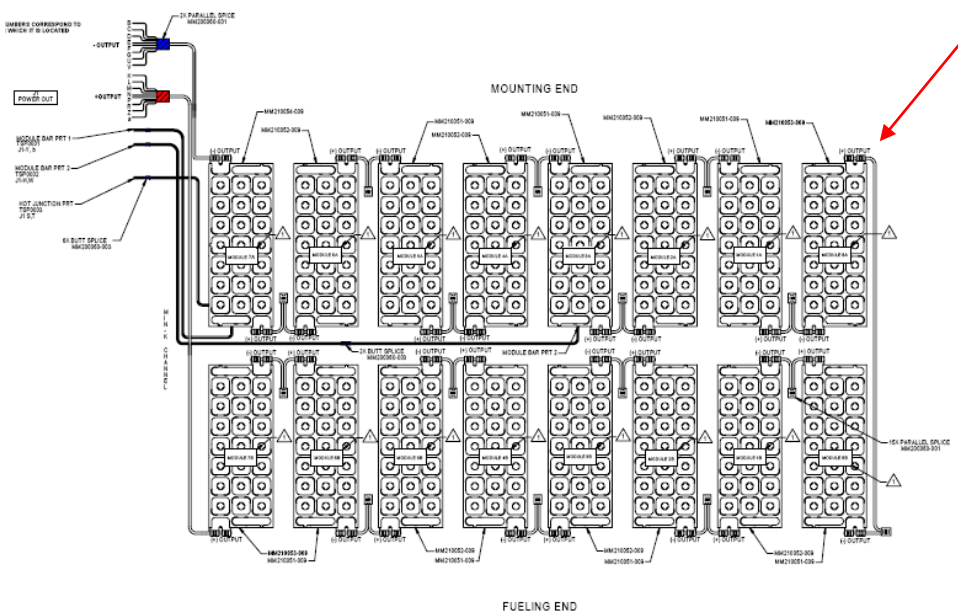

Thermoelectric Circuit

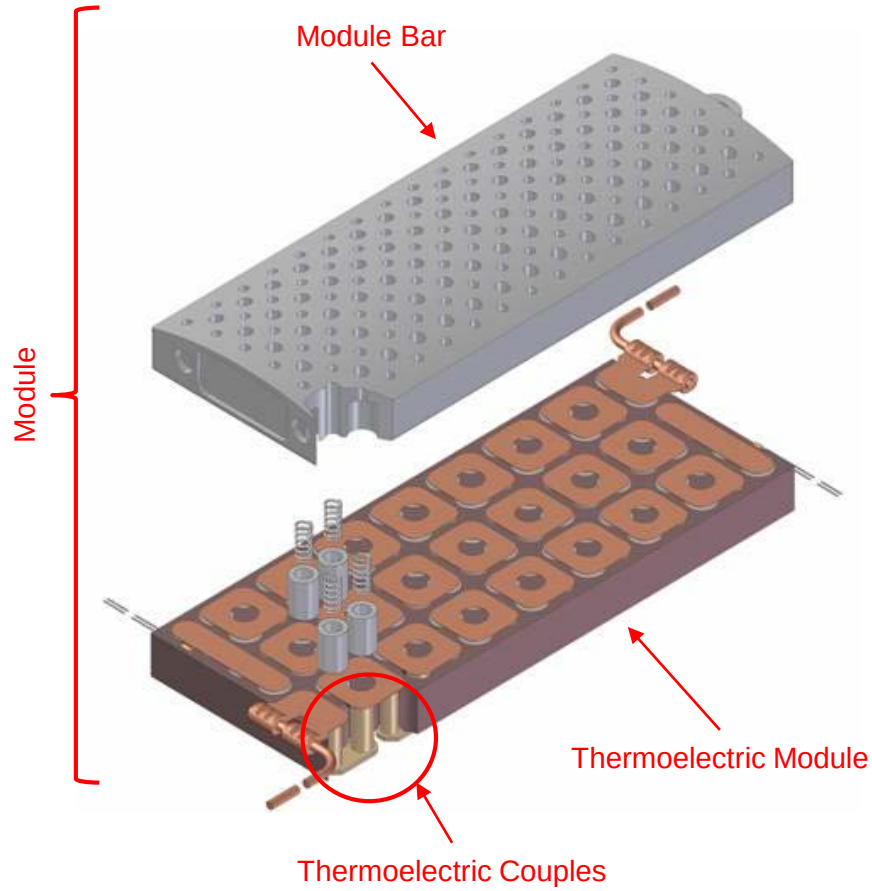

MMRTG Core

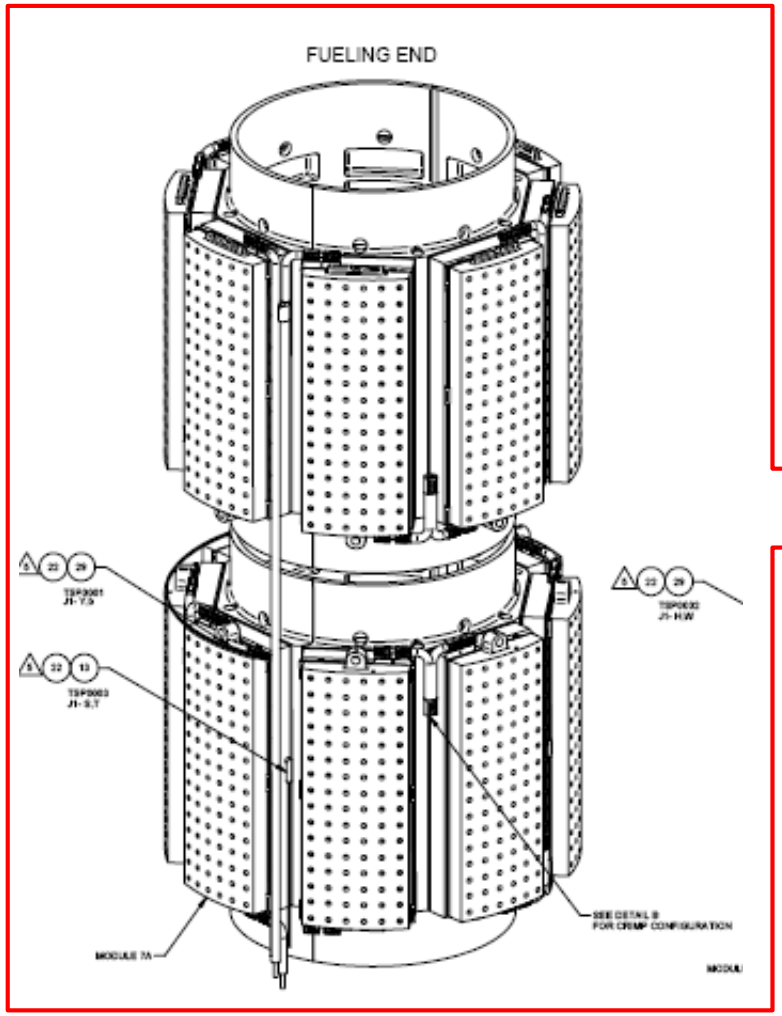

MMRTG Cutaway

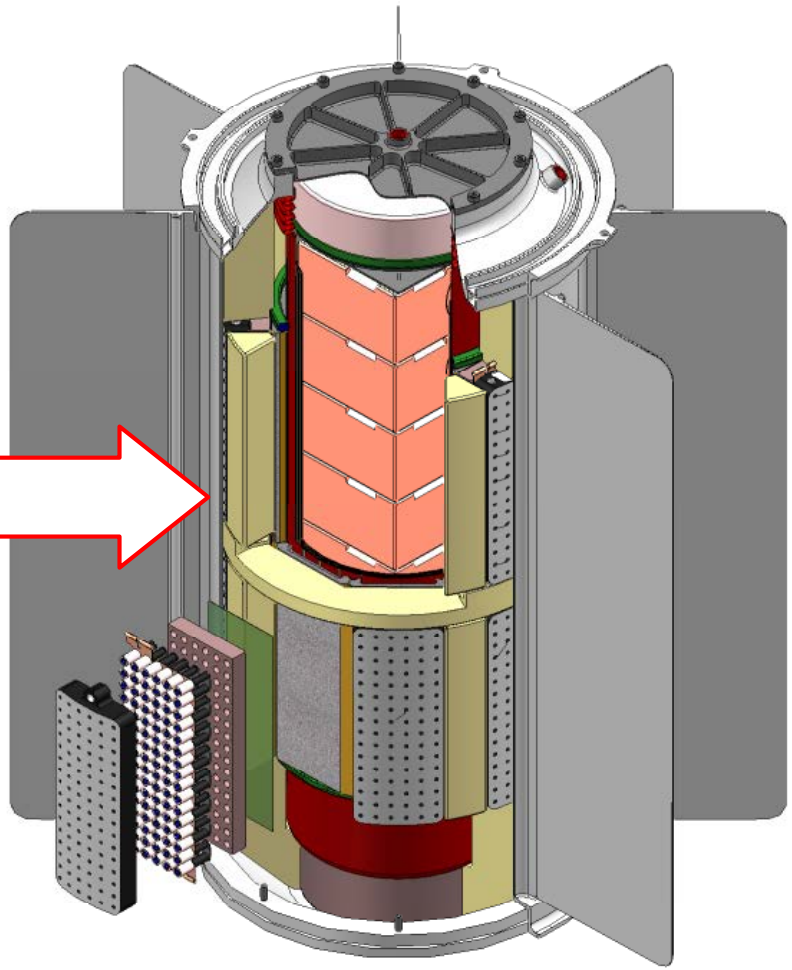

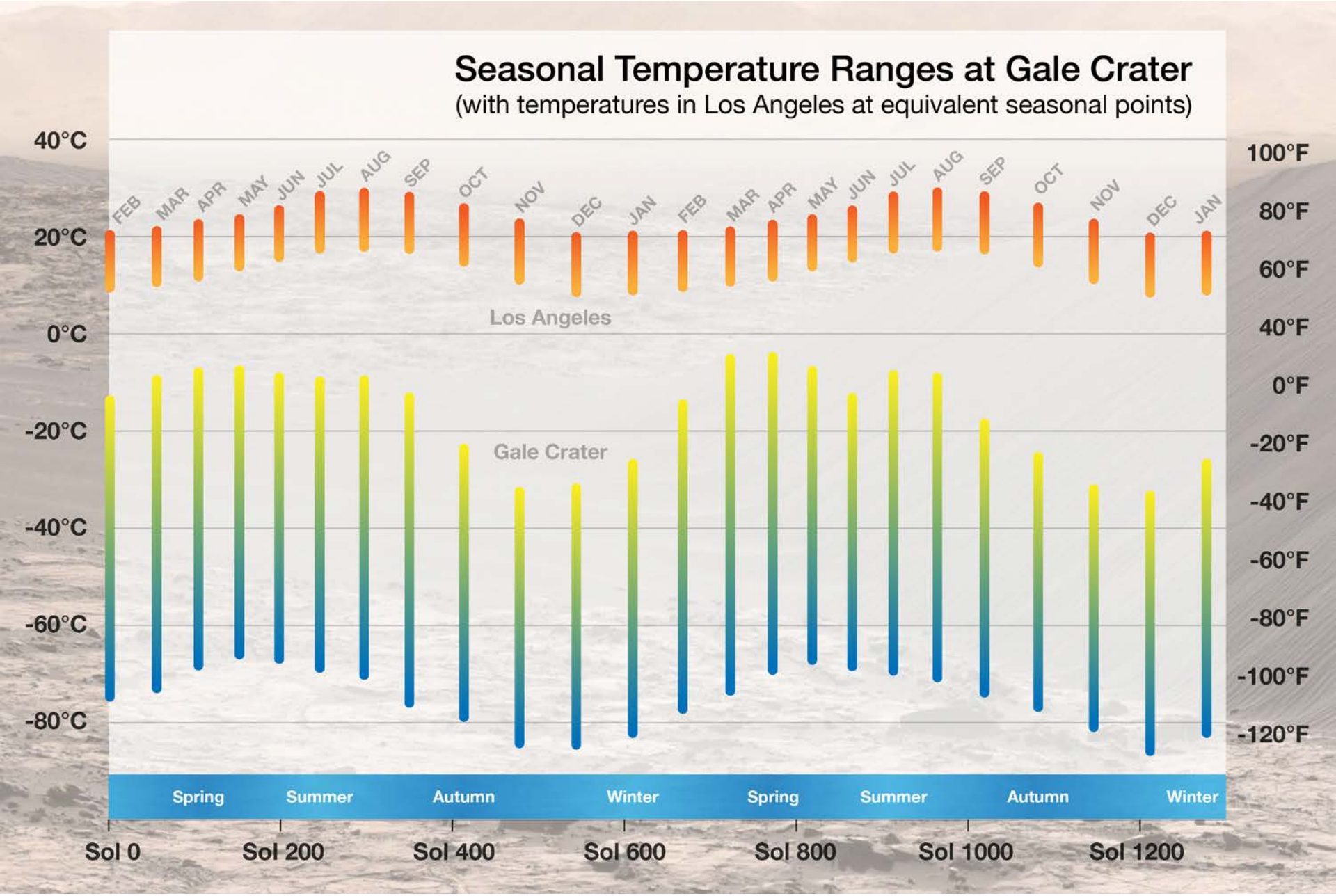
Seasonal Temperature Ranges at Gale Crater
(with temperatures in Los Angeles at equivalent seasonal points)
40°C
20°C
0°C
-20°C
-40°C
-60°C
-80°C
100°F
80°F
60°F
40°F
0°F
-20°F
-40°F
-60°F
-80°F
-100°F
-120°F
FEB
MAR
APR
MAY
JUN
JUL
AUG
SEP
OCT
NOV
DEC
JAN
FEB
MAR
APR
MAY
JUN
JUL
AUG
SEP
OCT
NOV
DEC
JAN
Los Angeles
Gale Crater
Spring
Summer
Autumn
Winter
Spring
Summer
Autumn
Winter
Sol 0
Sol 200
Sol 400
Sol 600
Sol 800
Sol 1000
Sol 1200

Diurnal Power Fluctuations

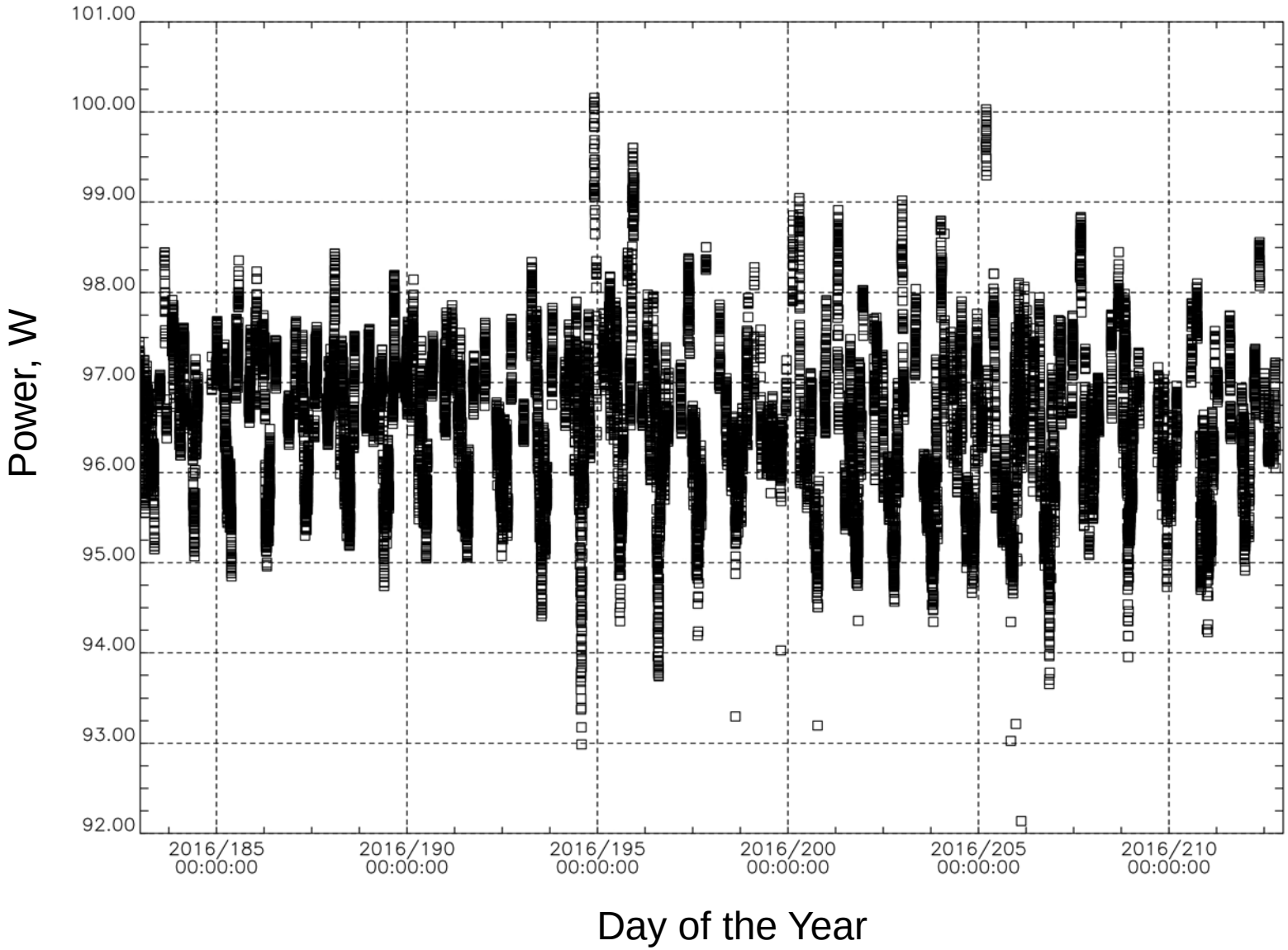

Average Power

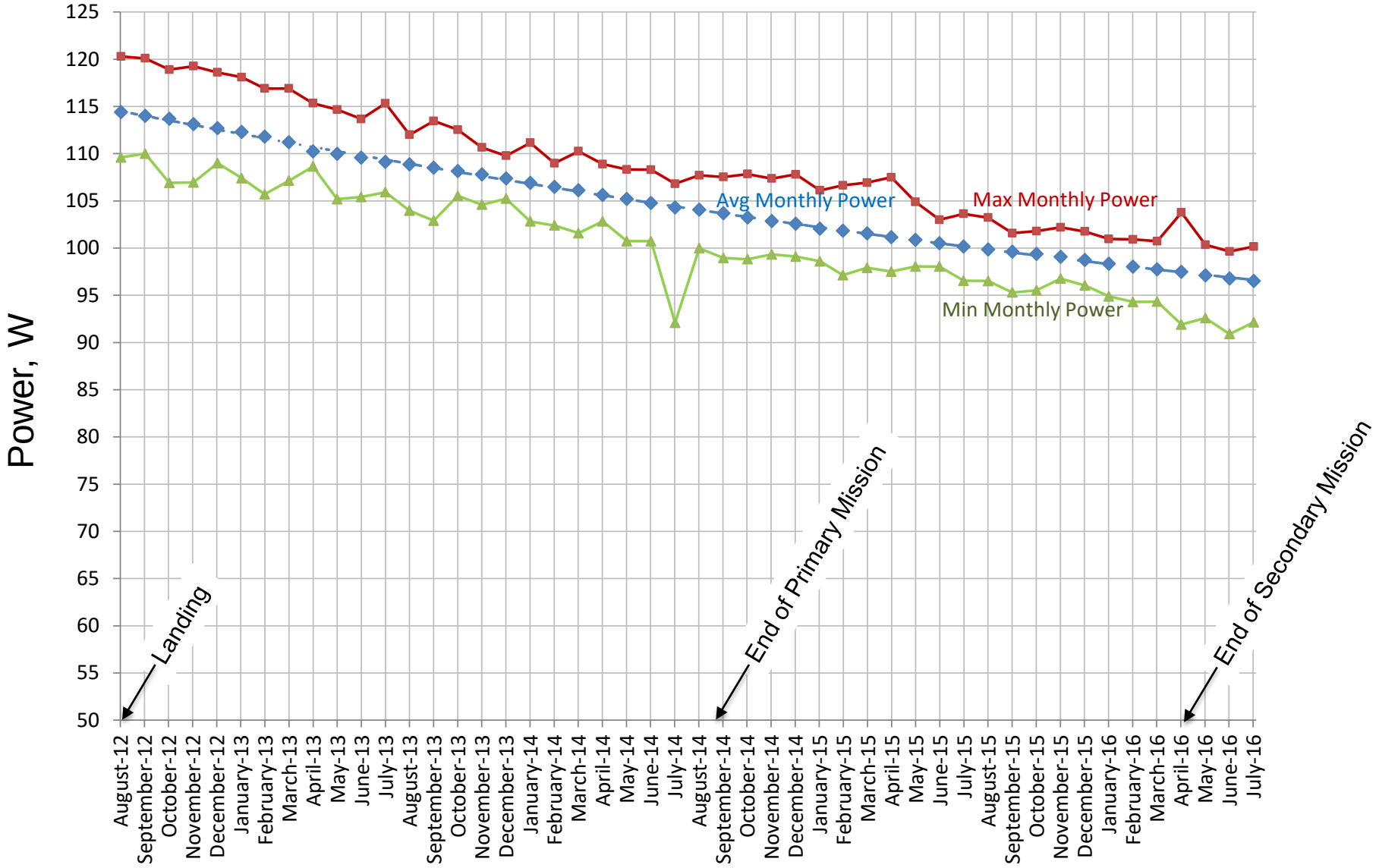

Average Power

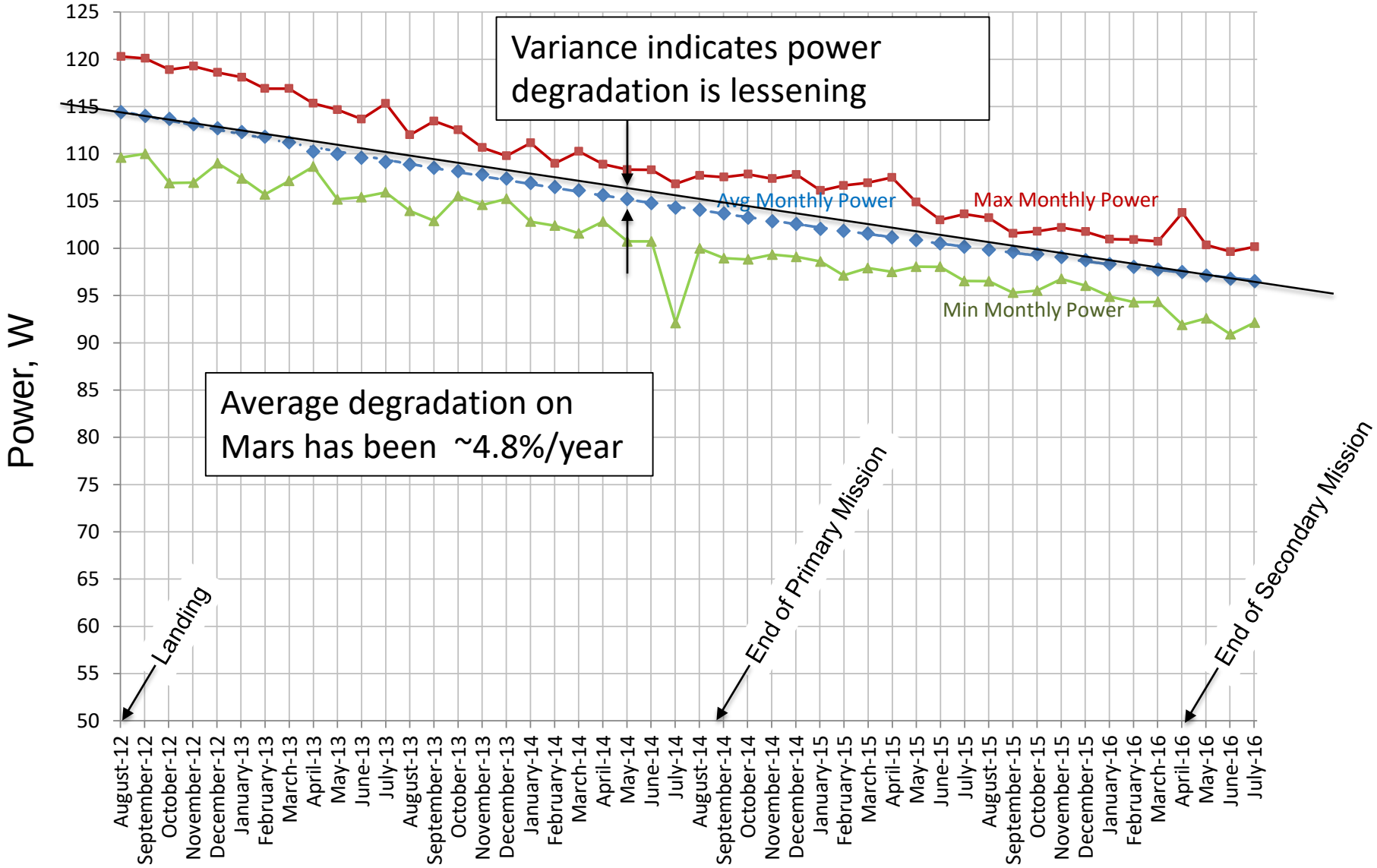

Extended Mission Energy for MSL

MSL used a linear degradation for conservatism; the RTG community typically uses an exponential decay rate.

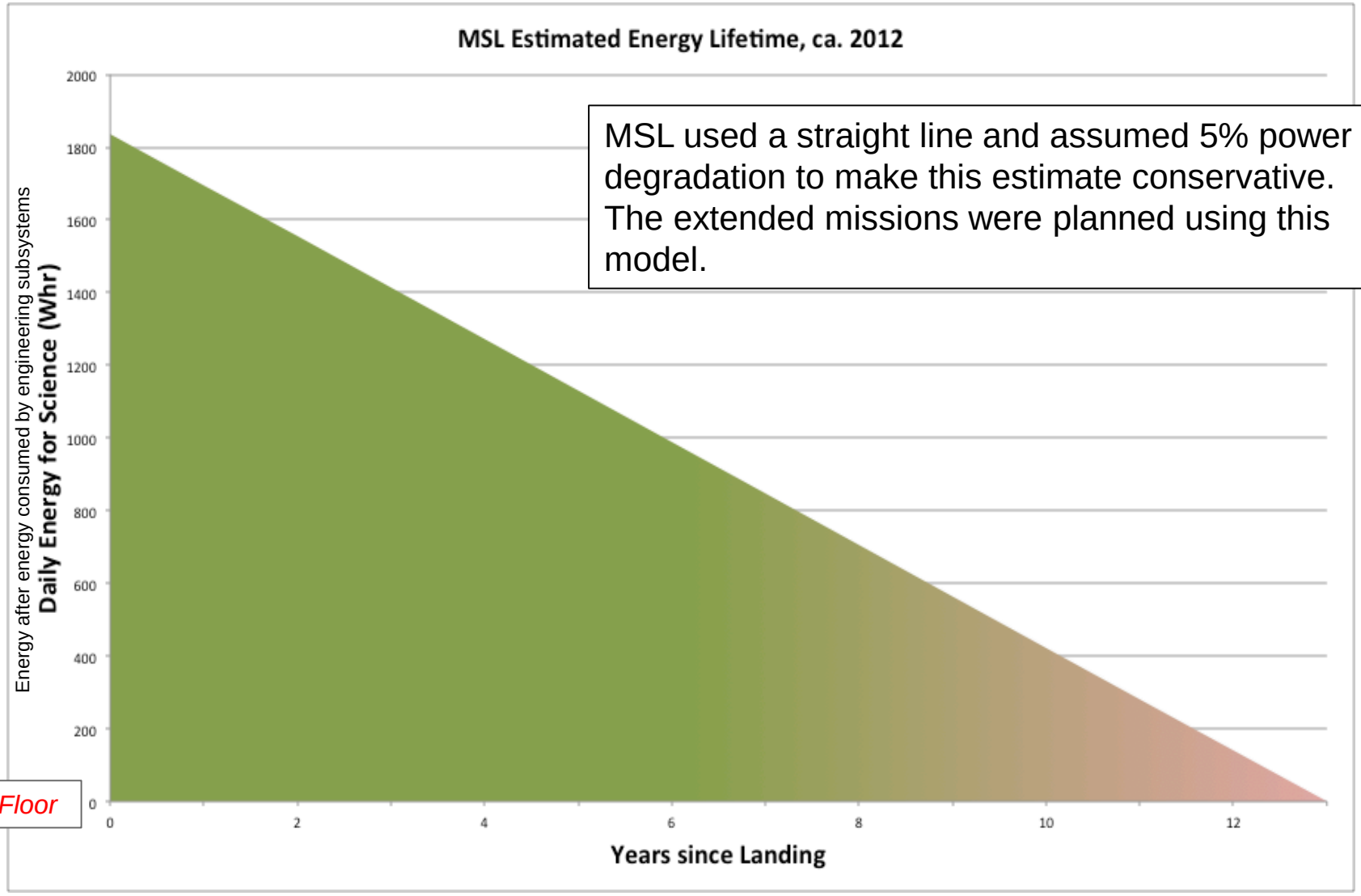

MSL used a straight line and assumed 5% power degradation to make this estimate conservative. The extended missions were planned using this model.

Science Floor

Extended Mission Energy for MSL

MSL used a linear degradation for conservatism; the RTG community typically uses an exponential decay rate.

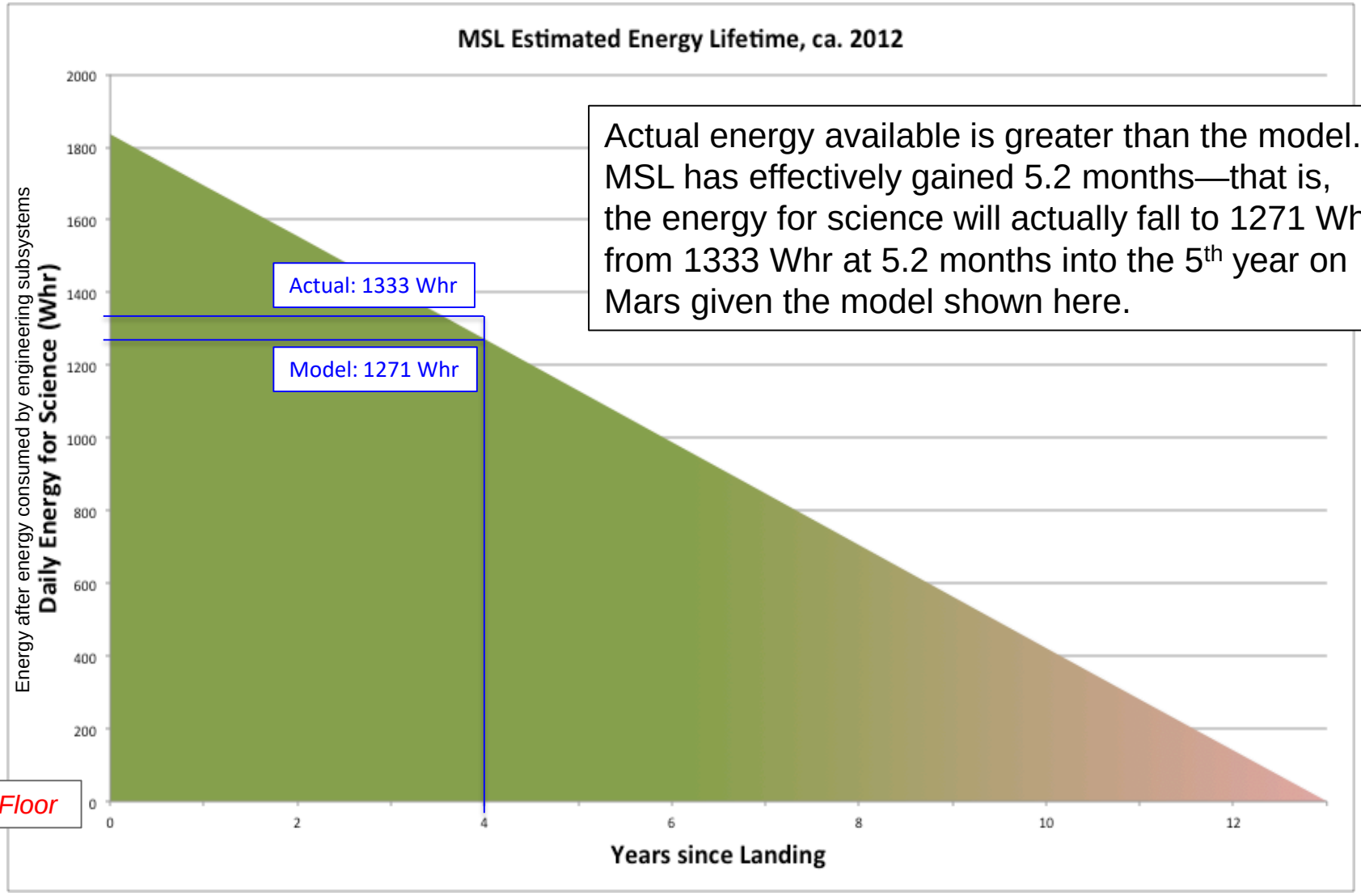

Actual energy available is greater than the model. MSL has effectively gained 5.2 months—that is, the energy for science will actually fall to 1271 Whr from 1333 Whr at 5.2 months into the 5th year on Mars given the model shown here.

Science Floor

The Next MMRTG to Fly

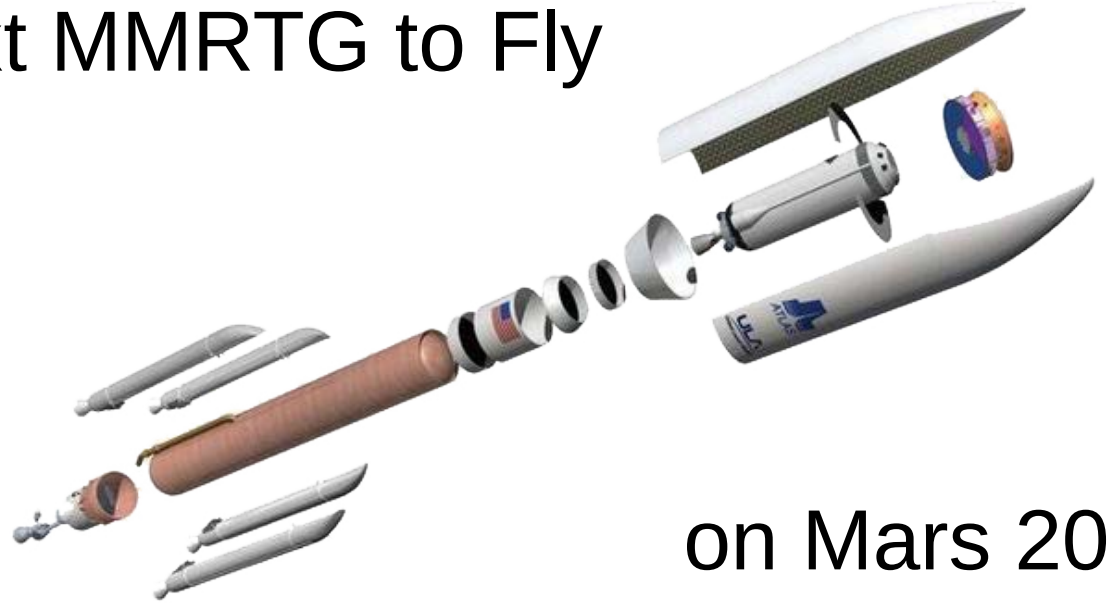

on Mars 2020

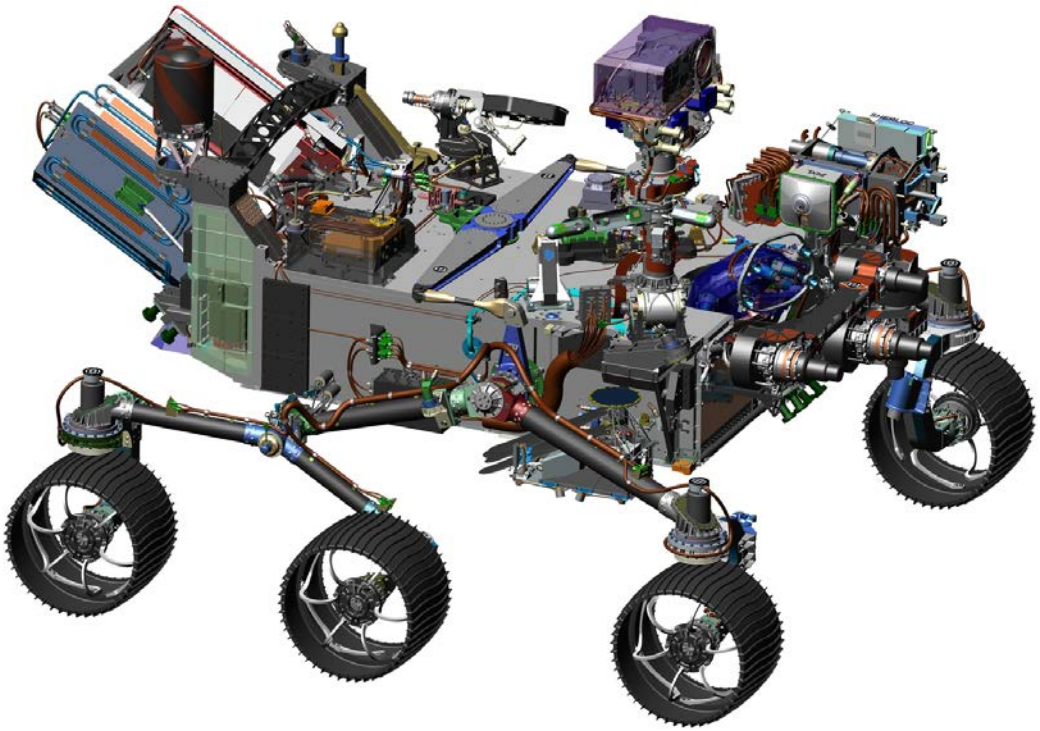

Thank you for listening.
Questions?

David Woerner
david.f.woerner@jpl.nasa.gov