SWOT

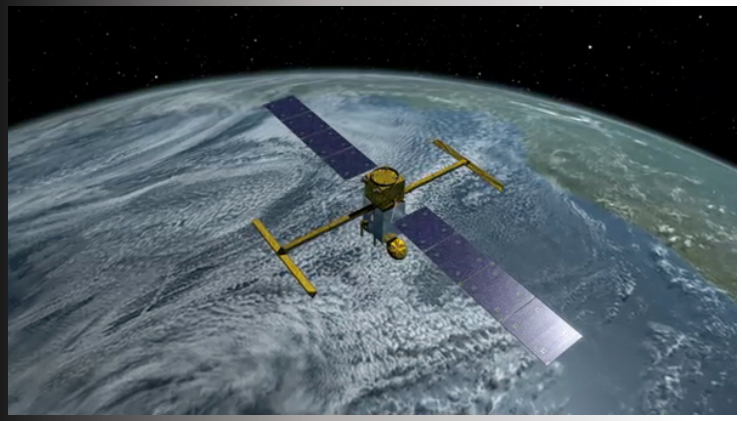

NISAR

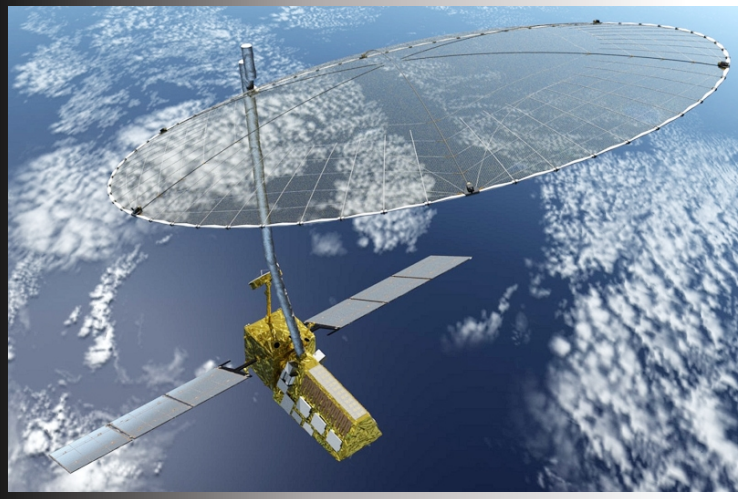

NX NASTRAN Modeling Techniques with FEMAP Applied to a Flexured Spider Assembly

Structures, Loads and Dynamics, and Mechanical Systems (SLaMS) Young Professionals (YP) Forum

Allison Yu
Jet Propulsion Laboratory,
California Institute of Technology

August 30, 2016

Overview

- SWOT, NISAR, and BoomCo Overview
- Spider Assembly Overview
- NX NASTRAN and FEMAP Modeling Techniques and Applications
  - Surface skins
  - NX NASTRAN glue
  - Contact analysis
  - External superelements

SWOT Overview

- Surface Water and Ocean Topography (SWOT) will observe the ocean's surface topography and measure how water bodies change over time
  - Ka-band Radar Interferometer (KaRIn) antenna structure is composed of the following assemblies:
    - 1x Metering Structure
    - 2x Integrated Mast Assemblies (IMA)
    - 2x Integrated Reflector Assemblies (IRA)
    - 10 meter baseline

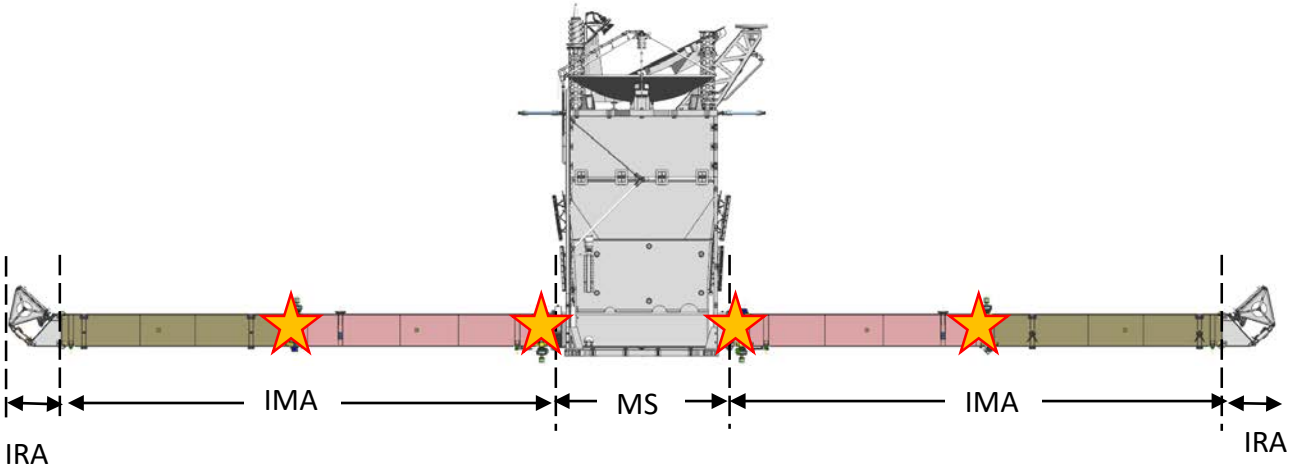

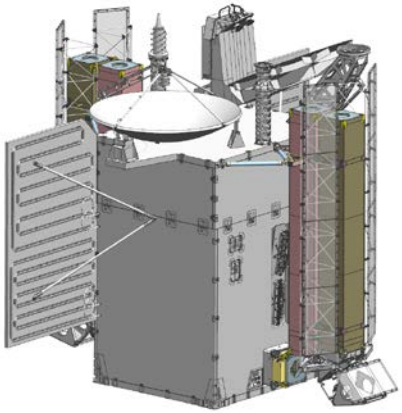

NISAR Overview

- NASA-ISRO SAR Mission (NISAR) will study natural hazards and global environmental change
  - The NISAR antenna is composed of the following assemblies:
    - 1x Radar Antenna Structure (RAS)
    - 1x Integrated Mast Assembly (IMA)
    - 1x Radar Antenna Reflector (RAR)
    - 12 meter reflector and 9 meter boom

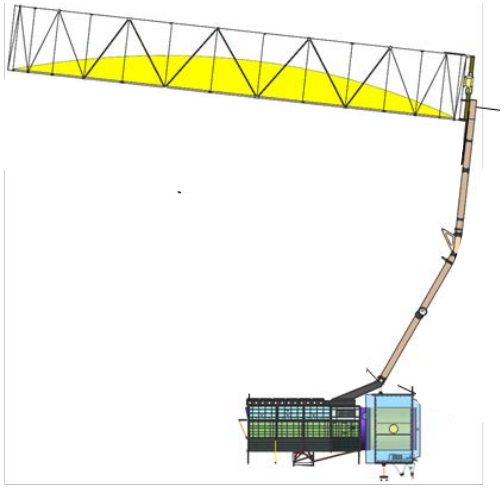

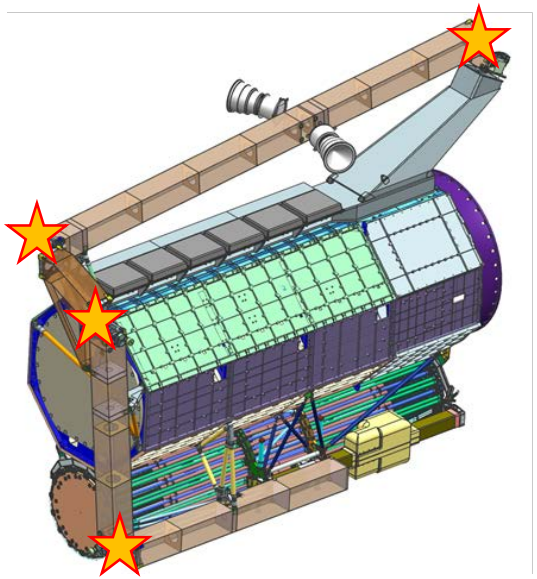

BoomCo Overview

- BoomCo is a shared development between Surface Water and Ocean Topography (SWOT) and NASA-ISRO SAR Mission (NISAR)
  - Responsible for delivering deployable booms to both projects
  - Goal of BoomCo is to develop as much common hardware between the two projects as feasible
    - Presentation will focus on the development and analysis of the “spider” hinge assembly

Hinge Overview

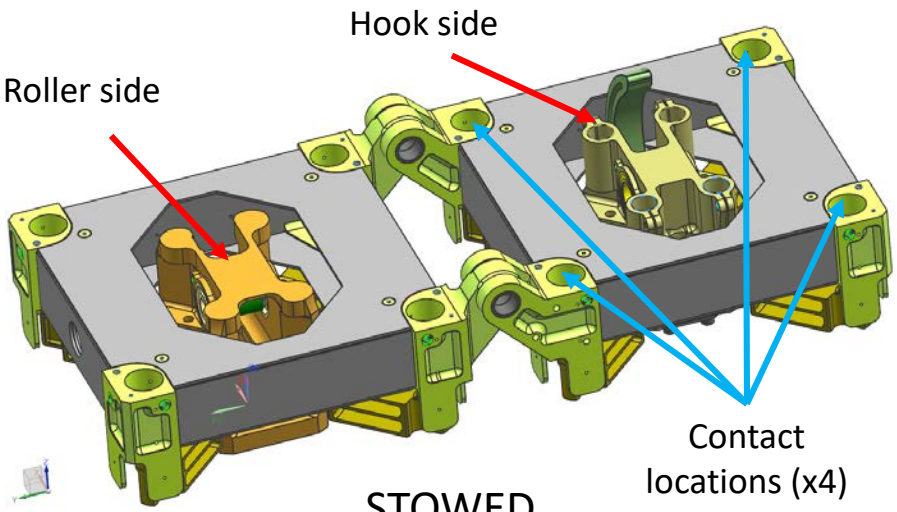

STOWED

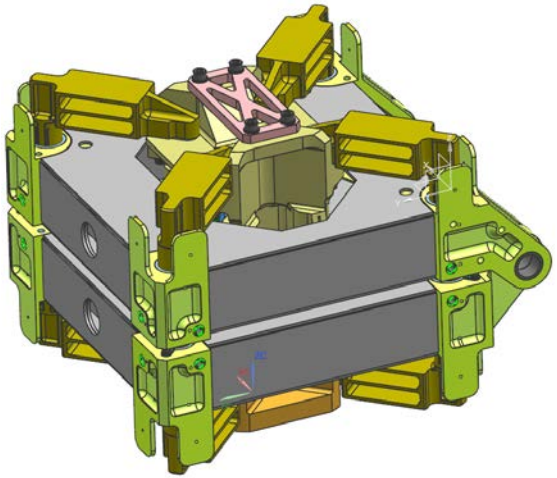

DEPLOYED

Deployment:

- Hinge closes
- Hook latches around roller
  - Spider legs deflect during latching
- After latching is complete, spider legs deflect a few millimeters per side with a given preload to contact interfaces

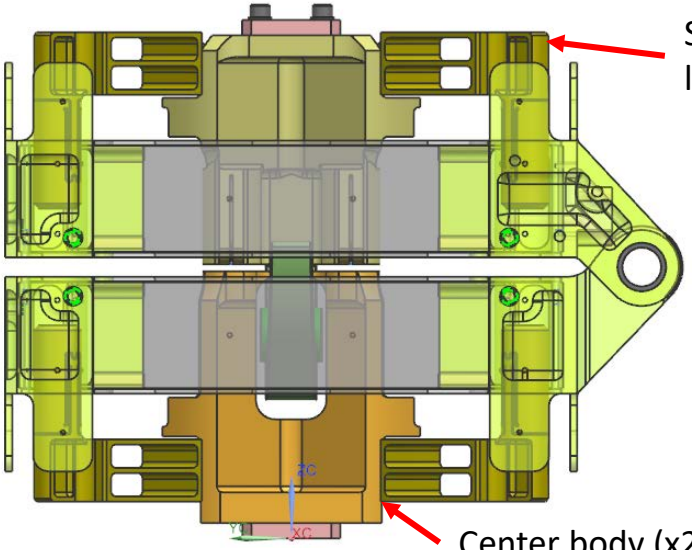

Load Cases for Spider Assembly

- A given deflection for the target preload

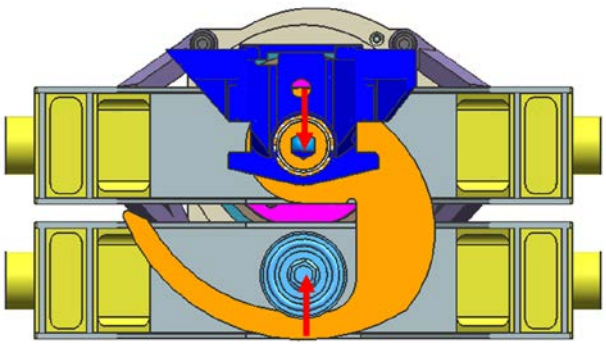

- Motor stall torque reacted by spider body

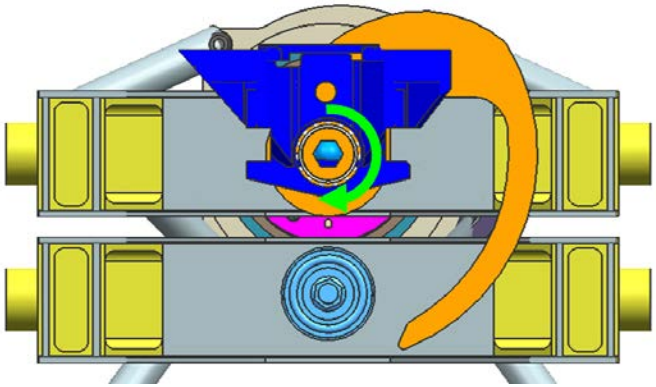

- Force couple due to roller stall during motor stall torque application

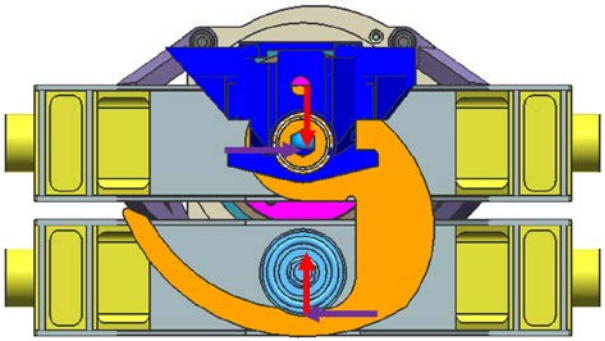

Other load cases:

- Launch loads in any direction
- Installation torque for spider into hinge body
- Qualification temperature range
- Loads due to accidental handling

Analysis of Spider Legs

- NX NASTRAN used to perform stress analysis on spider legs
  - FEMAP used as pre- and post-processor

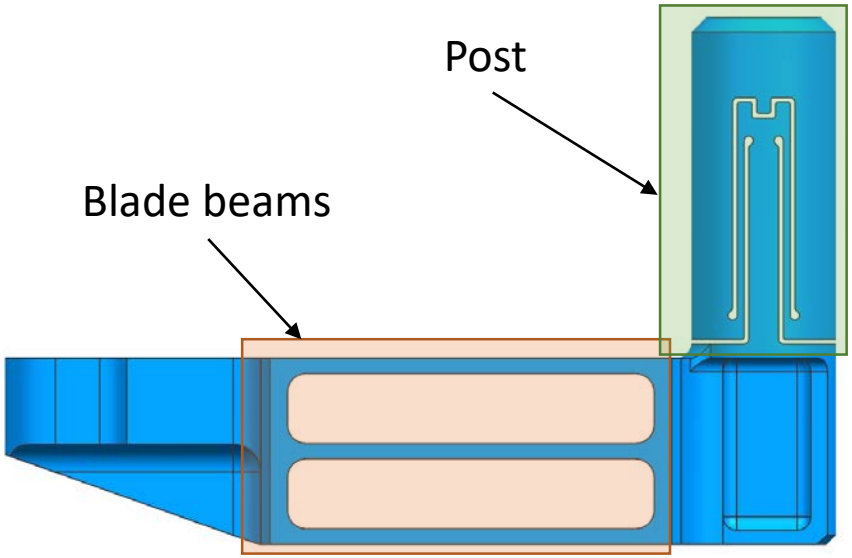

CAD Geometry

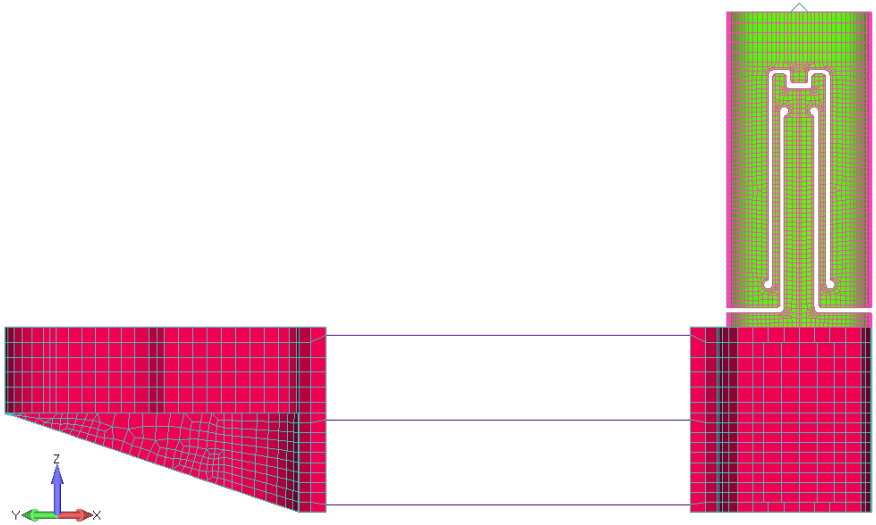

Finite Element Model

Blade Beam Sizing

- Sizing blade beams was an iterative process
  - Dependent on stiffness of the center body
- Blade beams modeled with shell elements to allow dimensions to be easily updated without remeshing
  - Requires means of transferring moment between shells and solid elements
    - Method 1: Surface skins
    - Method 2: NX NASTRAN glue feature

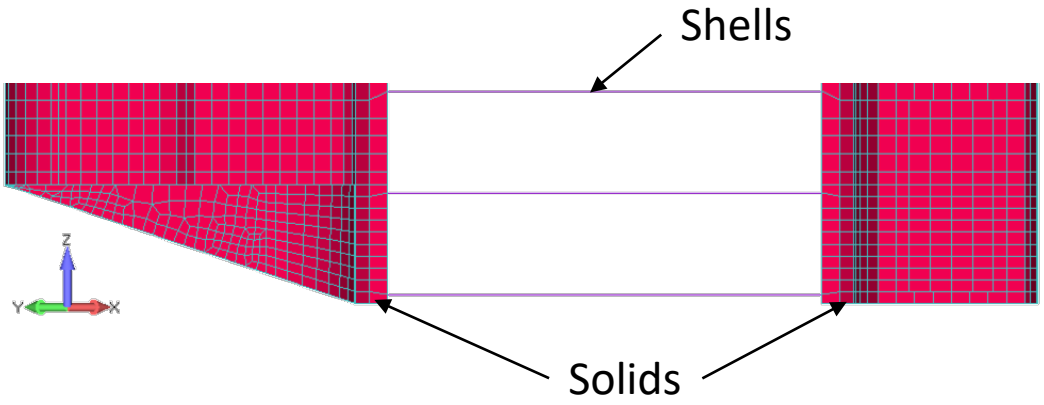

Surface Skin vs. NX NASTRAN Glue Comparison

- Surface skins
  - Pros: Faster run time (4.6 sec), easy to setup
  - Cons: Requires solid and plate mesh to line up

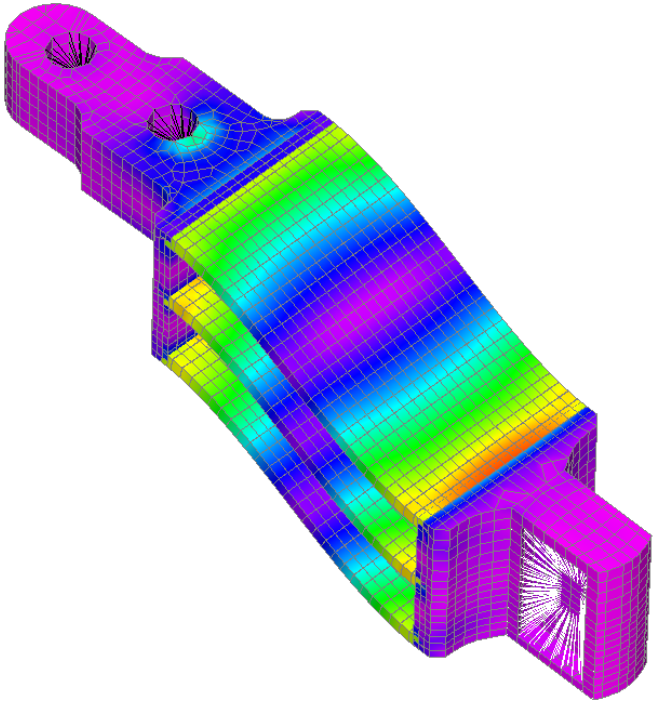

- NX NASTRAN glue
  - Pros: Meshes do not need to be aligned, easy to setup
  - Cons: Can be tedious if multiple connections defined, longer run time (4.8 sec)

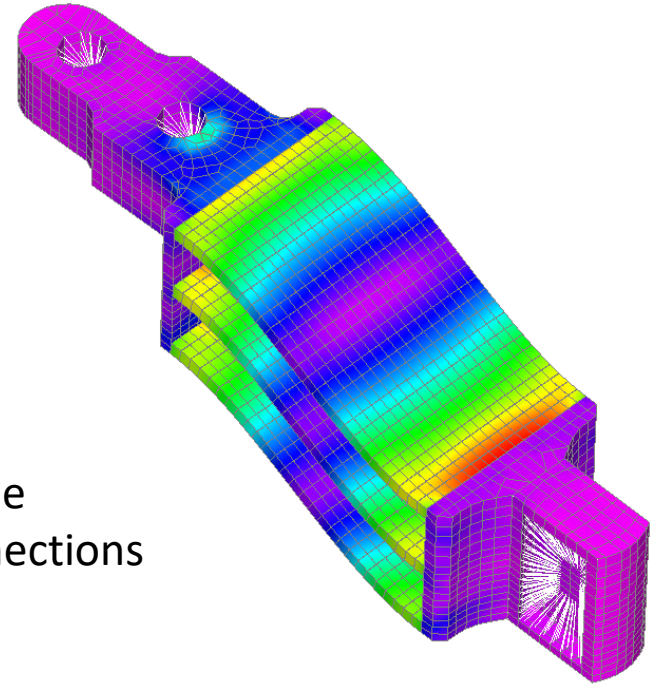

6 glue connections

Glue to Connect Discontinuous Meshes

- NX NASTRAN glue is an easy way to connect dissimilar meshes
  - Allows for surface-to-surface, edge-to-surface, and edge-to-edge connections
- Used to connect back end of spider beam to post
  - Simplified modeling of complex geometry
  - Provided ability to change geometry in selected regions without remeshing entire leg

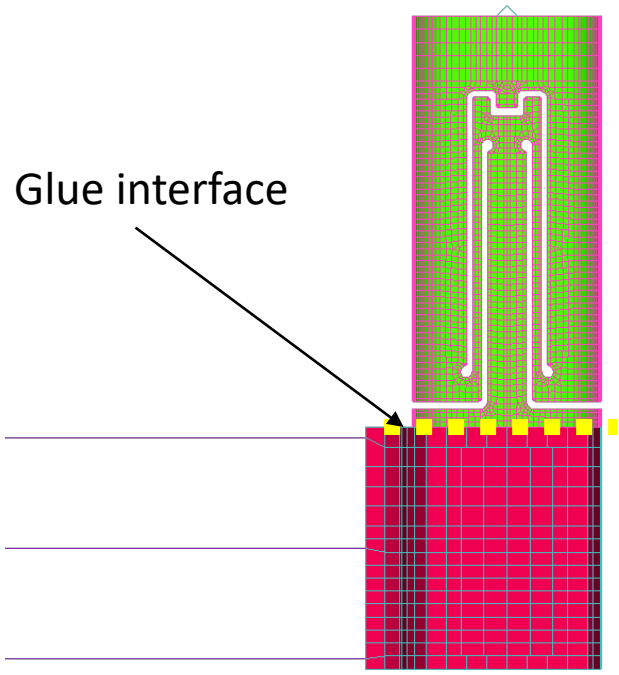

Contact Analysis of Flexures

- Contact analysis used to determine stresses when flexures hit hard stops
- Linear vs. non-linear contact
  - Run times can be faster for a linear solver (not the case for spider analysis)
    - SOL 101 runtime = 31 min
    - SOL 601 runtime = 26 min
  - Neither had issues converging
  - Results within 10% of each other
- Linear contact was sufficient for this problem

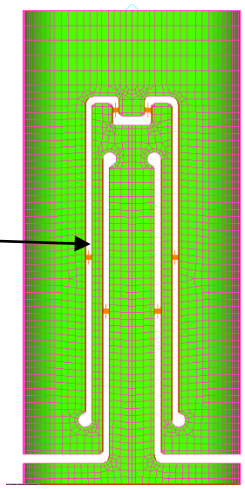

Linear Contact

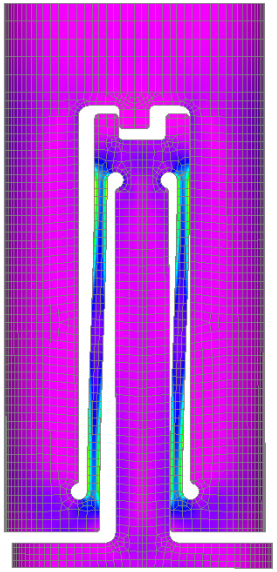

Non-Linear Contact

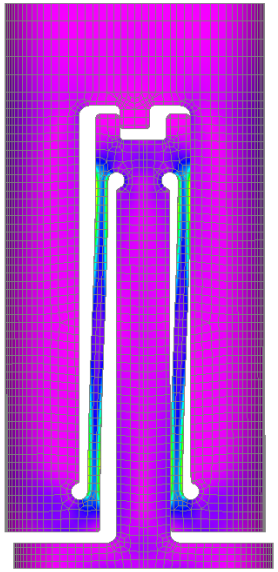

External Superelement of Spider Legs

- Iterative design process used for center body
  - To save computation time, superelement created for spider legs
    - Represents mass and stiffness of original FEM
    - Superelement model only needed to be analyzed once since boundary conditions and loads were not changing
  - Results of the residual model + superelement matched the results of the combined model

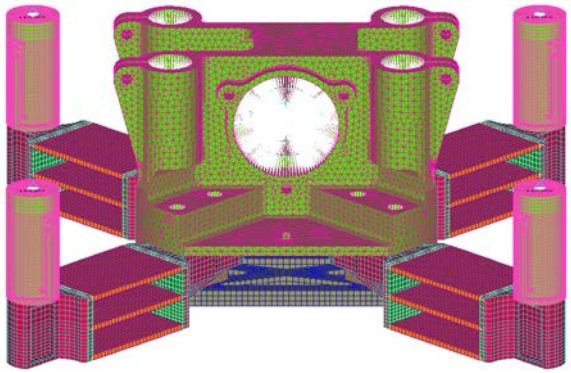

COMBINED MODEL

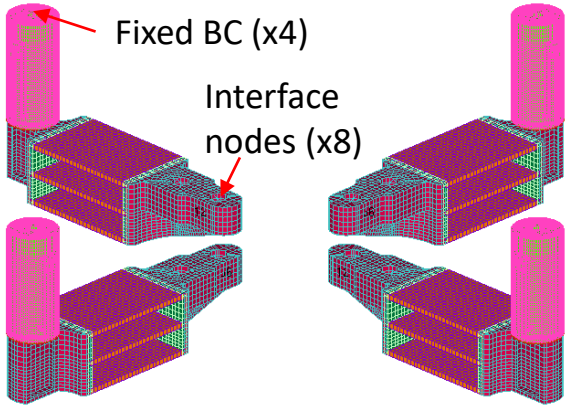

SUPERELEMENT MODEL

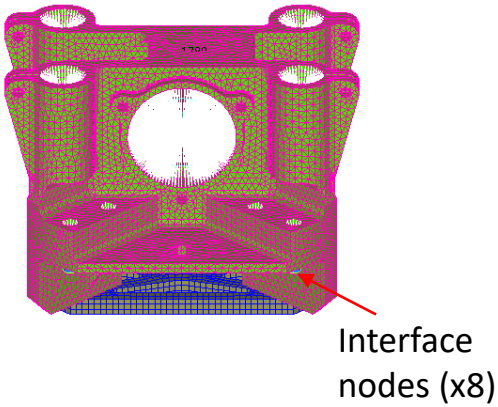

RESIDUAL MODEL

Benefits of Superelements

- Longer initial runtime for SE, but saves time if multiple center body designs are evaluated
  - Combined model runtime = 9 min
  - Spider leg SE runtime = 18 min
  - Center body + SE runtime = 4 min
- Fairly easy to setup in FEMAP
  - Create and run superelement model
    - Define loads and boundary conditions
    - Define interface nodes that connect to residual model
  - Run residual model with superelement
    - Reference superelement results
    - Connect interface nodes from superelement and residual model in ASM bulk data file

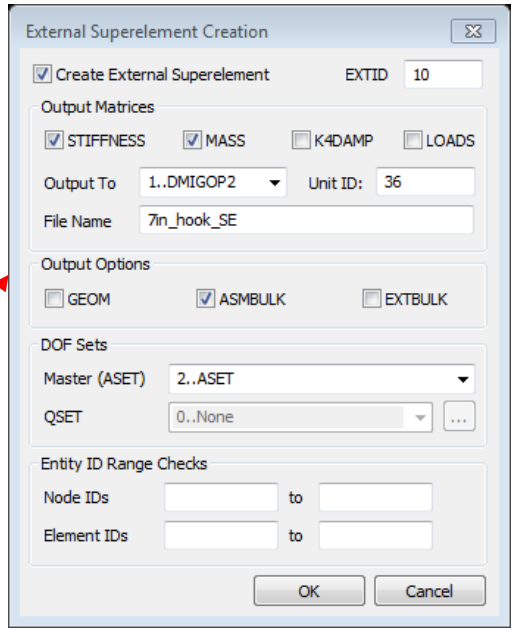

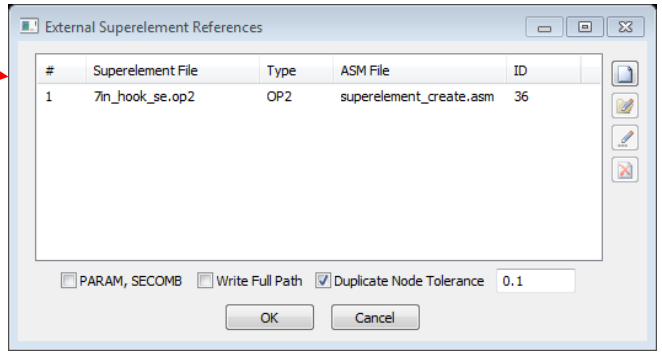

Conclusions

- There are many tools within FEMAP and NX NASTRAN to improve efficiency in modeling
  - Moment transfer between shells and solids can be done easily with either skins or NX NASTRAN glue
  - NX NASTRAN glue is a powerful tool to help connect dissimilar meshes
  - Linear contact analysis is sufficient for linear problems
  - External superelements are easy to setup in FEMAP, save a lot of computational time, and provide accurate solutions
- During early design stages, more simplified representations (i.e., plate vs. solid model) can save time and modeling effort during sizing of members
  - Designs are constantly changing and creating detailed finite element models during sizing process is not practical