An Update on the NASA-ISRO Dual-Frequency DBF SAR (NISAR) Mission

IGARSS Beijing
July 12, 2016

Paul Rosen, Scott Hensley, Scott Shaffer, James Hoffman, Chung-Lun Chuang, Wendy Edelstein, Yunjin Kim

Jet Propulsion Laboratory

California Institute of Technology

Raj Kumar, Tapan Misra, Rakesh Bhan
ISRO Space Applications Centre

Raju Sagi, R. Satish
ISRO Satellite Centre

© 2016 California Institute of Technology. Government sponsorship acknowledged.

NISAR Mission Overview

NISAR Characteristic:	Would Enable:
L-band (24 cm wavelength)	Low temporal decorrelation and foliage penetration
S-band (12 cm wavelength)	Sensitivity to light vegetation
SweepSAR technique with Imaging Swath > 240 km	Global data collection
Polarimetry (Single/Dual/Quad)	Surface characterization and biomass estimation
12-day exact repeat	Rapid Sampling
3 – 10 meters mode-dependent SAR resolution	Small-scale observations
3 years science operations (5 years consumables)	Time-series analysis
Pointing control < 273 arcseconds	Deformation interferometry
Orbit control < 500 meters	Deformation interferometry
> 30% observation duty cycle	Complete land/ice coverage
Left/Right pointing capability	Polar coverage, north and south

NISAR Will Uniquely Capture the Earth in Motion

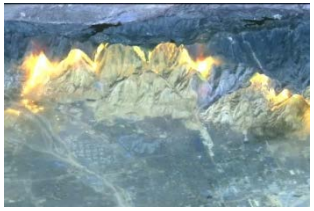

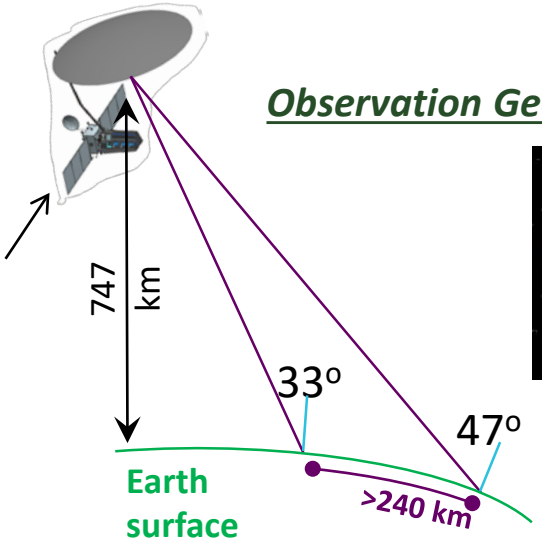

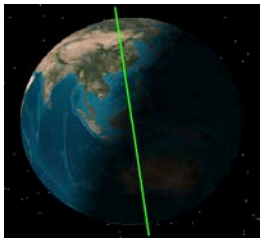

© 2016 California Institute of Technology. Government sponsorship acknowledged.

NISAR Instrument Overview

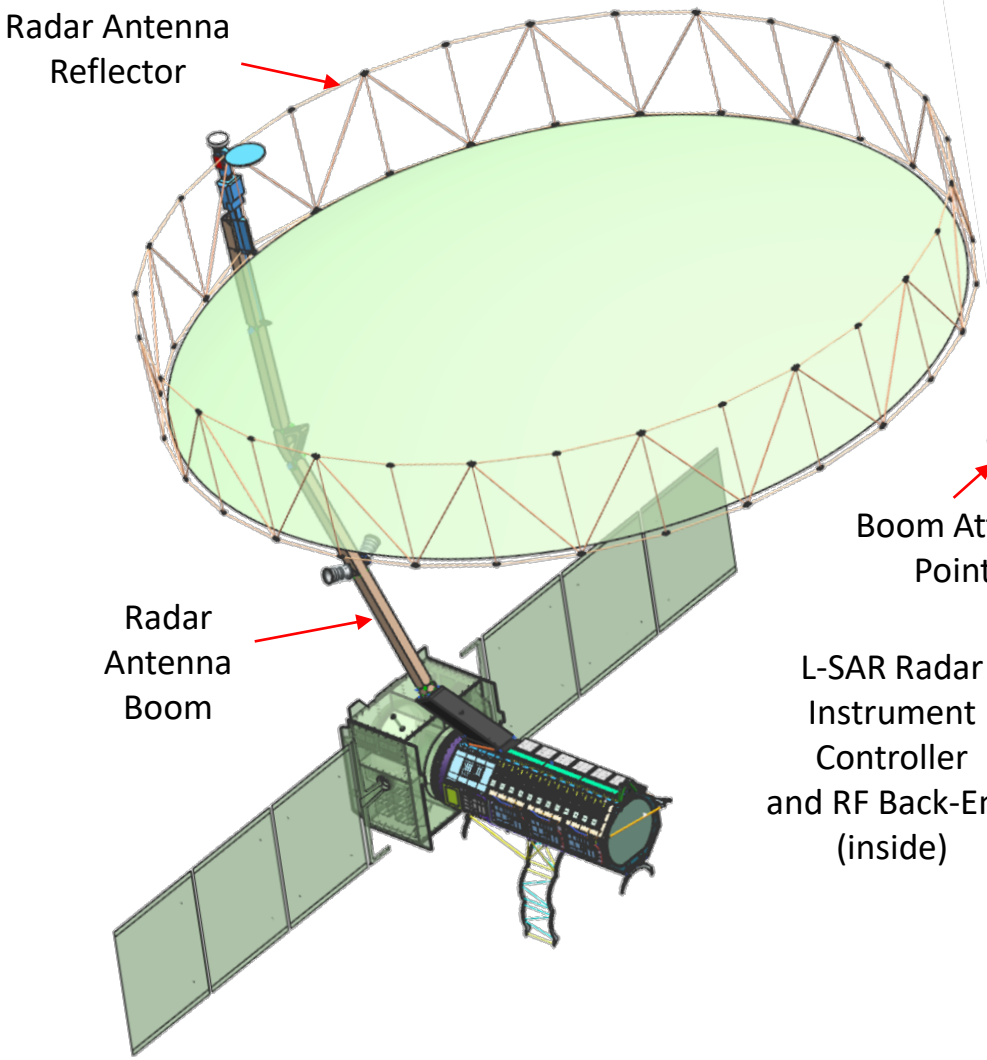

Instrument Subsystems:

- L-Band SAR (JPL)
- S-Band SAR (ISRO)
- Instrument Structure (JPL)
- Radar Antenna (JPL)

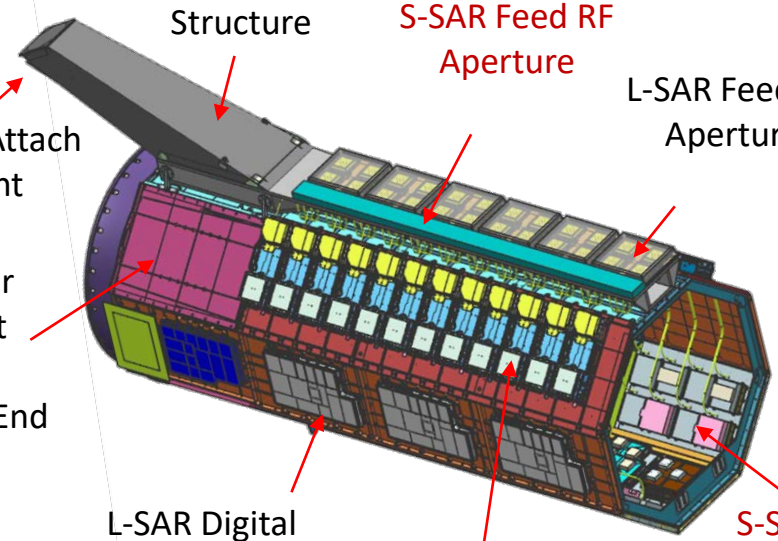

Instrument Structure also houses GPS unit and Solid State Recorder

© 2016 California Institute of Technology. Government sponsorship acknowledged.

NISAR Science Observing/Operations Modes
Blanket Land and Ice Coverage Every 12 Days

- Observation strategy employs a small subset of possible modes

Observation Strategy	L-band		S-band		Culling Approach	
Science Target	Mode+	Resolution	Mode	Resol.	Sampling	Desc Asc
Background Land	DP HH/HV	12 m x 8 m			cull by lat	
Land Ice	SP HH	3 m x 8 m			cull by lat	
Sea Ice Dynamics	SP VV	48 m x 8 m			s = 1 p	
Urban Areas		6 m x 8 m			s = 1 p	
US Agriculture	QP HH/HV VV/VH				s = 1 p	
Himalayas			CP RH/RV		s = 1 p	
India Agriculture					s = 1 p	
India Coastal Ocean			DP HH/HV or VV/VH		s = 1 p	
Sea Ice Types	DP VV/VH				s = 3 p	

© 2016 California Institute of Technology. Government sponsorship acknowledged.

NISAR Swath Coverage

- All science disciplines require frequent coverage over global targets
- NISAR approach would acquire sufficient swath to cover equatorial ground track extent
  - ➔Global access at desired time sampling and imaging characteristics
- *SweepSAR* technology being implemented independently by both JPL and ISRO
  - Transmit pulse with full feed illumination
  - Track echo digitally with individual receivers (12 at L-band; 24 at S-band)
  - Assemble individual receivers into a full-swath measurement

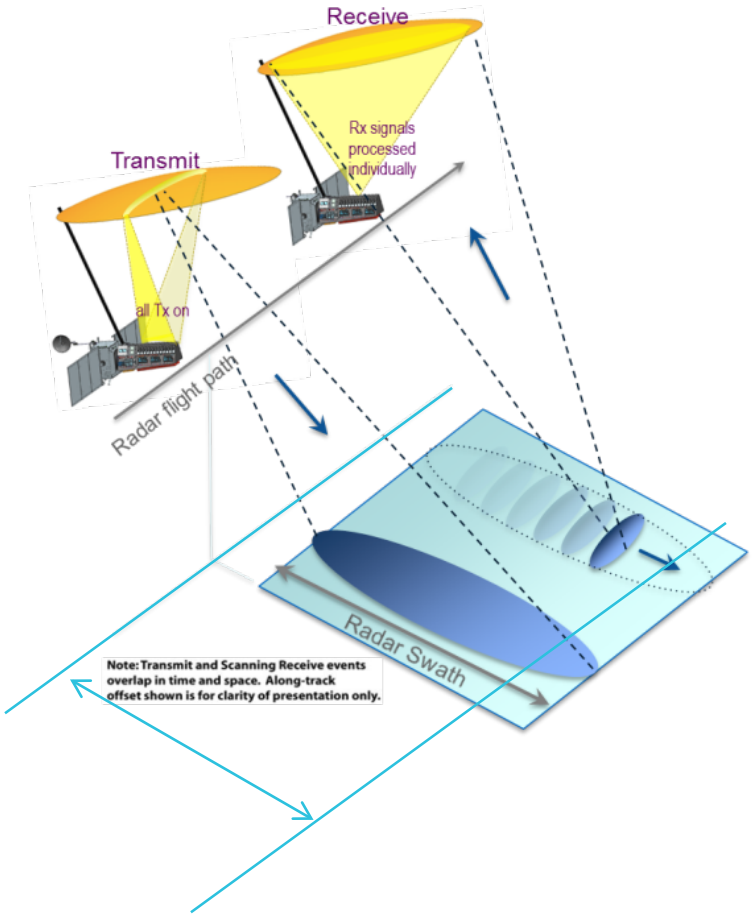

~236 km Earth-fixed ground track spacing at equator for 12-day repeat orbit

© 2016 California Institute of Technology. Government sponsorship acknowledged.

L-SAR Electronics
(Only Horizontal Polarization Shown)

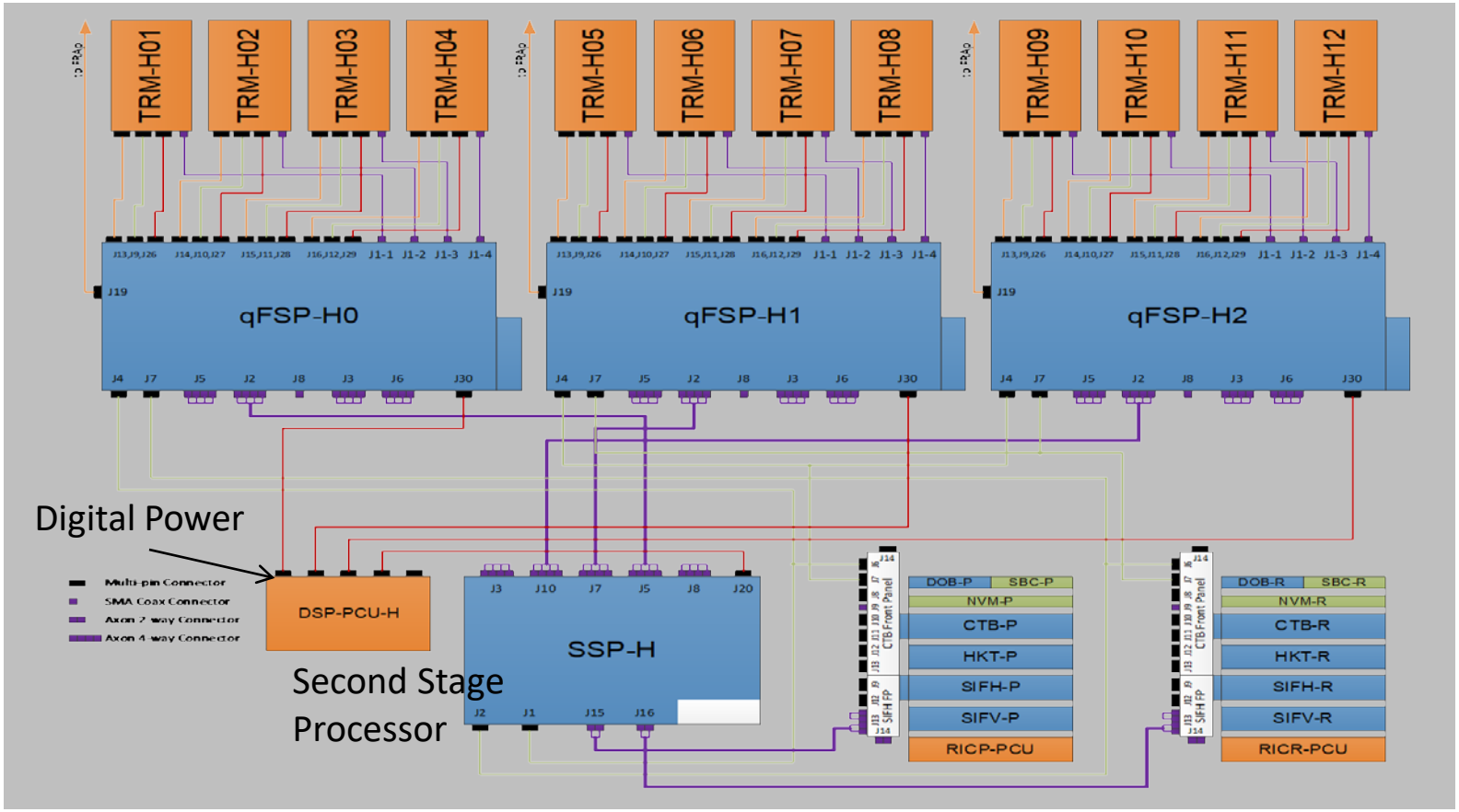

Transmit Receive Modules

First Stage Processors

System Timing, Telemetry, Solid State Recorder Interface

© 2016 California Institute of Technology. Government sponsorship acknowledged.

High Power Density Phased Arrays

- The SweepSAR reflector architecture is expected to be more cost effective than a traditional phased array, but the RF and DC power densities become much higher

- Development focused on improving reliability for high power densities
  - Increase RF power density
  - Improve component stability
  - Enable new instrument architecture

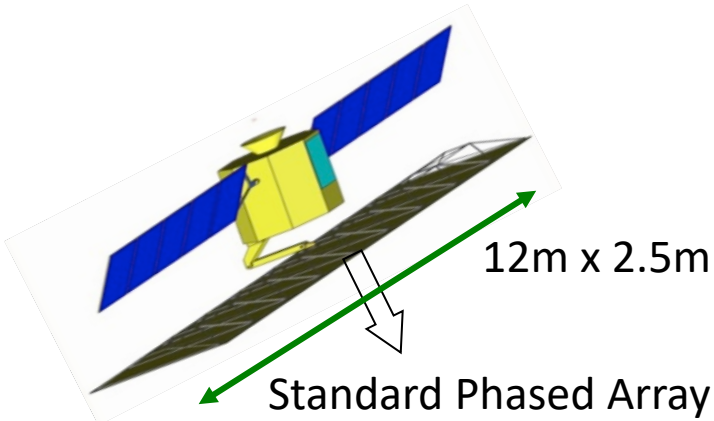

For 2kW RF Peak Radiated Power

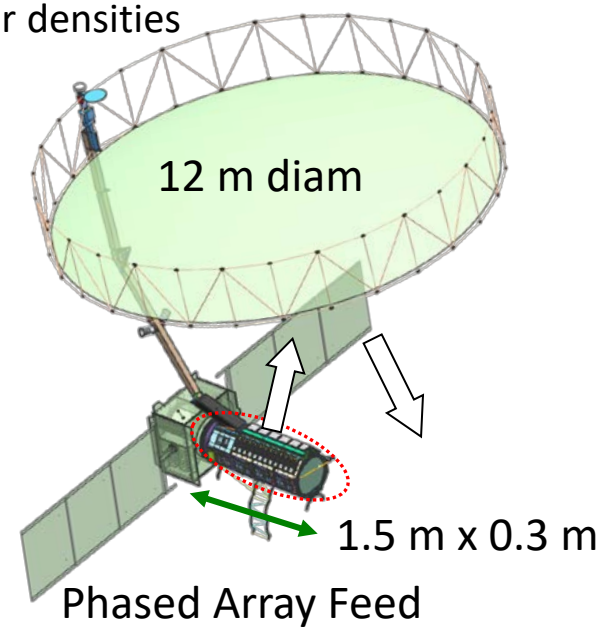

- Lower RF Power Density (67 W/m^2)
- Larger Radiator Area (30 m^2)
- Higher Thermal Inertia

- Higher RF Power Density (4000 W/m^2)
- Smaller Radiator Area (0.5 m^2)
- Lower Thermal Inertia

© 2016 California Institute of Technology. Government sponsorship acknowledged.

GaN High Power Amplifier for L-SAR

Increased RF output, decreased DC power and heat

- Exhaustive studies of GaN-based high-power amplifiers showed that NISAR could decrease its DC power by almost half of a kilowatt by moving from then-state-of-art Bipolar devices to GaN
- DC power savings are matched by a decrease in waste heat
- JPL tested devices from multiple vendors for TID (total dose) and SEE (Single Event Effects)
  - All devices tested showed no ill-effects from radiation, up to our required levels
  - L-SAR now has 24 GaN High Power Amplifiers

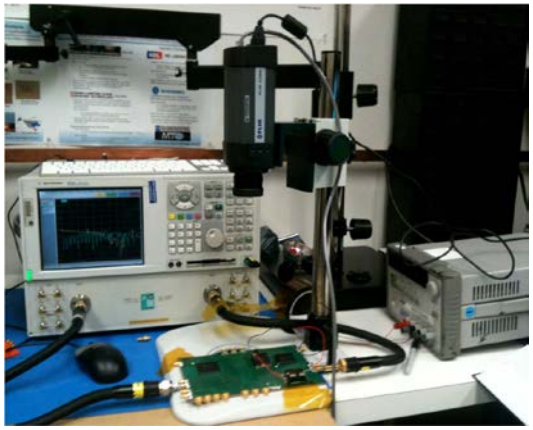

- Tested with FLIR thermal camera (left) and thermal chamber
- Devices shown to not exceed NASA standards for device temperature
- Transmitters shown to be thermally stable

© 2016 California Institute of Technology. Government sponsorship acknowledged.

L-SAR Digital Hardware

qFSP (quad First Stage Processor): Controls TRM, digitizes RF, digital calibration, preliminary beamforming

CTB (Control and Timing Board): System timing/Command distribution

SSP (2nd Stage Processor): DBF, data packing, formatting, headers

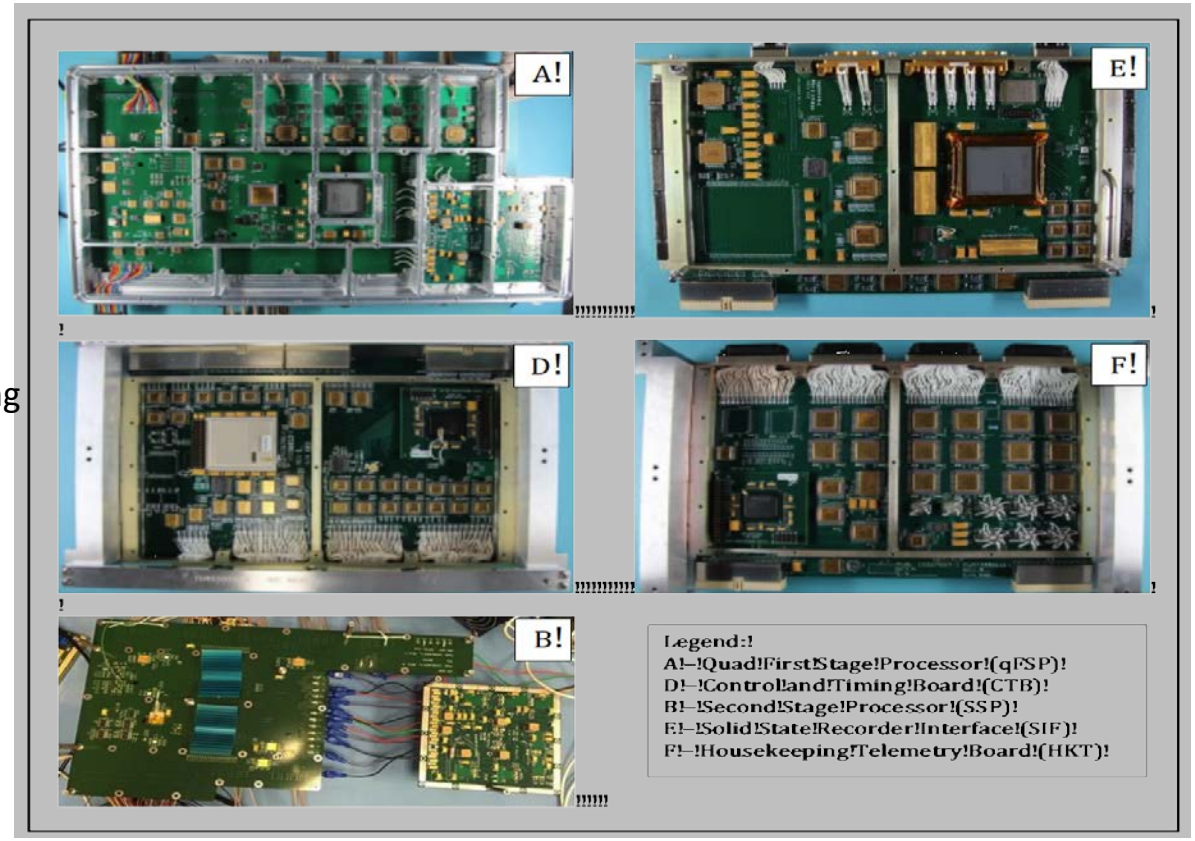

SIF (Solid State Recorder Interface): Formats data for recorder, adds telemetry headers

HKT (House-Keeping & Telemetry): Monitors instrument temperature and voltages for health and for calibration.

© 2016 California Institute of Technology. Government sponsorship acknowledged.

L-SAR Digital System Data Flow
Both H and V Polarizations Shown

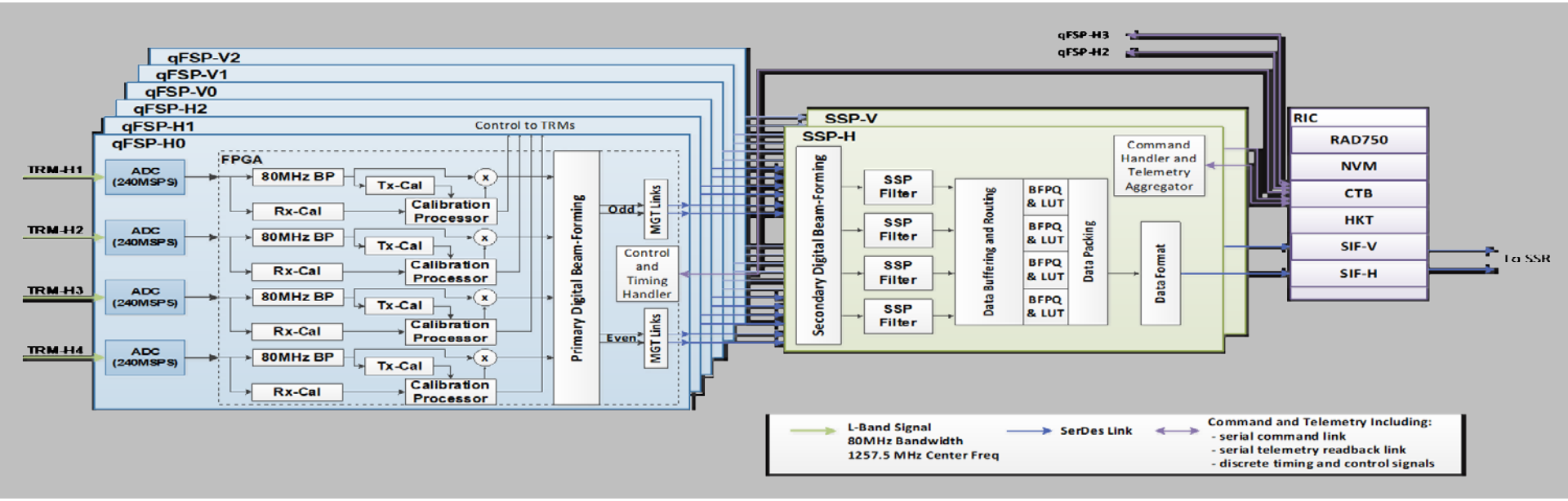

L-band RF Signals IN

240 MHz Samples

Dig. Filtering/ Rx Cal

Tx Cal

Cal Correction

1st Stage Beamforming

To 2nd stage

2nd Stage Beamforming

Final Filtering

BFPQ & Lookup Table Corrections

Data Packing, Formatting, Headers

To Solid State Recorder

© 2016 California Institute of Technology. Government sponsorship acknowledged.

L-SAR ADC Measured Performance

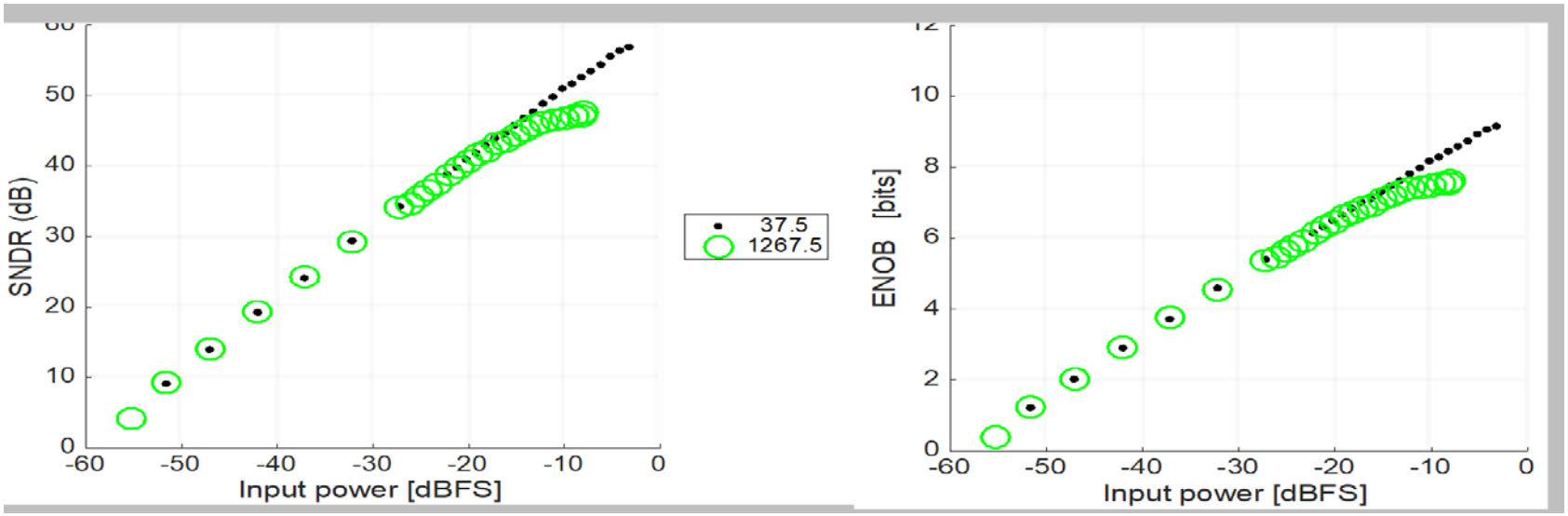

- L-SAR uses sub-harmonic sampling to directly digitize 1.2 GHz RF signal with a 240 MHz sampling clock. This drastically simplifies the 24 channel system, but the importance of ADC performance is increased significantly.
- In order to meet instrument requirements for SNDR (Signal to Noise+Distortion Ratio) and ENOB (Effective Number of Bits), the science signal needs better than 40dB SNDR and approximately 8-bit ENOB, < 400 femto-second jitter.

Chuang et. Al (2016) “NISAR L-band Digital Electronics Subsystem: A Multichannel System with Distributed Processors for Digital Beam Forming and Mode Dependent Filtering”, IEEE Radar Conference 2016.

© 2016 California Institute of Technology. Government sponsorship acknowledged.

PRF & Timing Diagram

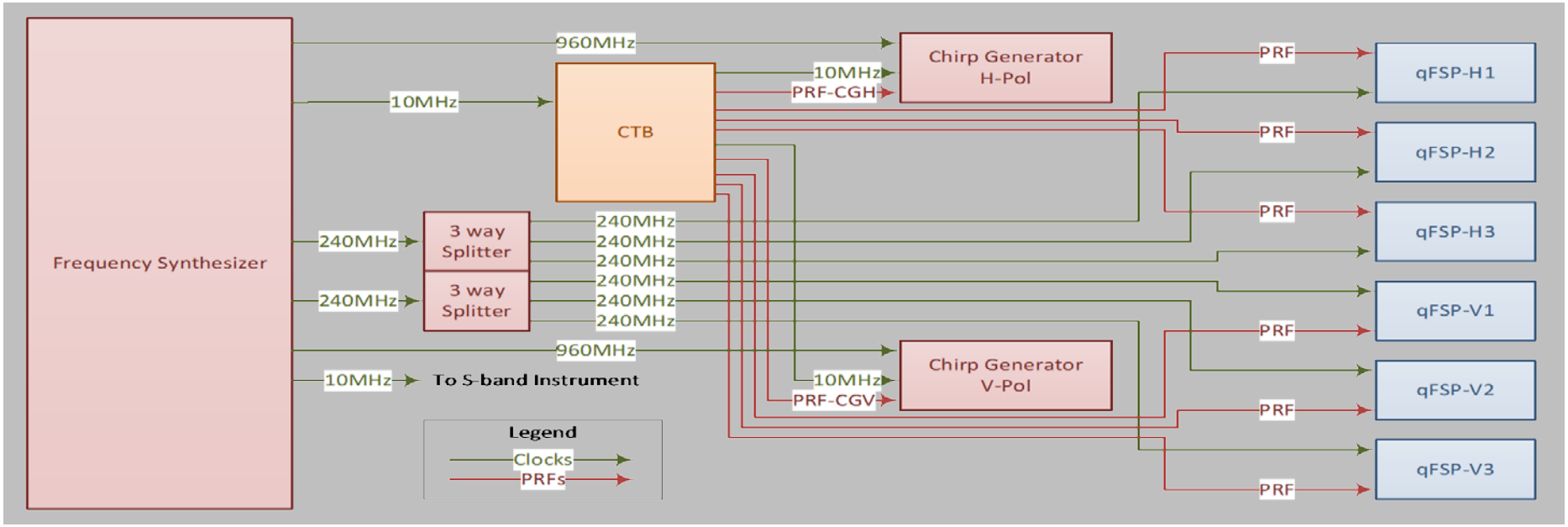

- Frequency Synthesizer has a 10 MHz STALO (STAble Local Oscillator) as a master clock.
- Using the 10 MHz, it generates a 960 MHz Chirp Generator Clock and a 240 MHz ADC clock.
- The CTB (Control and Timing Board) used the 10 MHz to create the radar PRF, which is also used to discipline the Chirp Generator trigger.
- The qFSPs all receive the PRF and 240 MHz clock, using the latter for ADC and processing clock.

© 2016 California Institute of Technology. Government sponsorship acknowledged.

Real-time digital calibration

- The SweepSAR technique enables large swath imaging, but introduces new challenges
- 24 independent transmitters and receivers must be made to work as one, with little help from the ground
  - Data rates preclude sending all 24 channels to the ground for processing, so significant processing must take place on-board
  - Once channels are combined, errors in individual channels cannot fully be corrected, so this must take place on-board
  - Data volumes dictate that much of this processing must take place in real-time
- By leveraging the 24 independently digitized channels, we are able to calibrate both transmit and receive on-board, prior to beamforming

© 2016 California Institute of Technology. Government sponsorship acknowledged.

SweepSAR calibration concept

Traditional Loopback Calibration

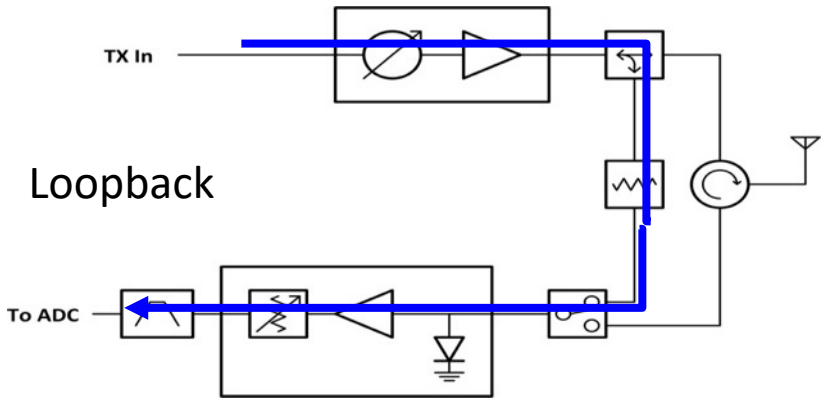

SweepSAR Digital Calibration

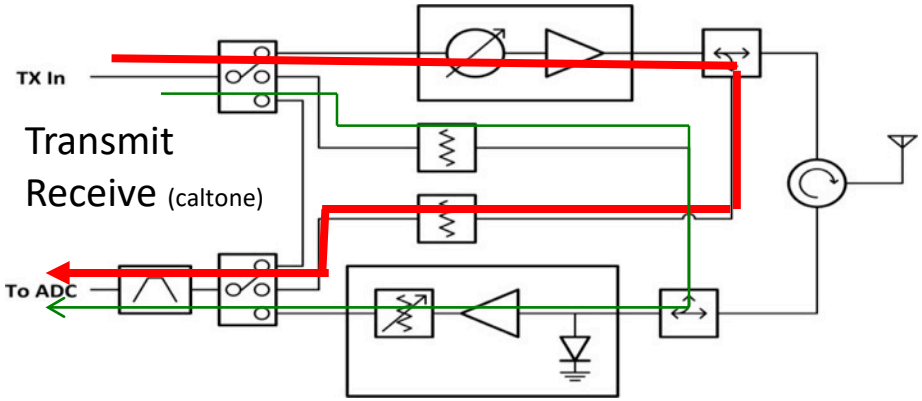

- **Relaxes the isolation requirement between TX and RX**
- **Calibration can be done during actual receive events**
- **Differentiates between TX and RX changes (important for SweepSAR)**
- **Compensates for all changes not just temperature**

Hoffman et al. (2015) “Digital Calibration System for the Proposed NISAR (NASA/ISRO) Mission”

© 2016 California Institute of Technology. Government sponsorship acknowledged.

Calibration Testbed (breadboarding)

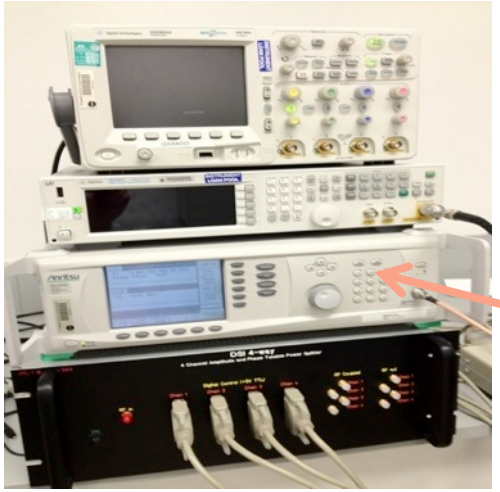

Multi-channel excitation: Single channel of CW or chirp, through a computer controlled 4-way splitter with independent control of phase and amplitude.

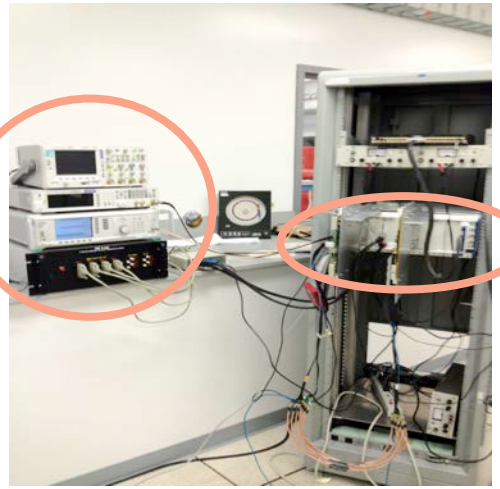

Digital Calibration Testbed

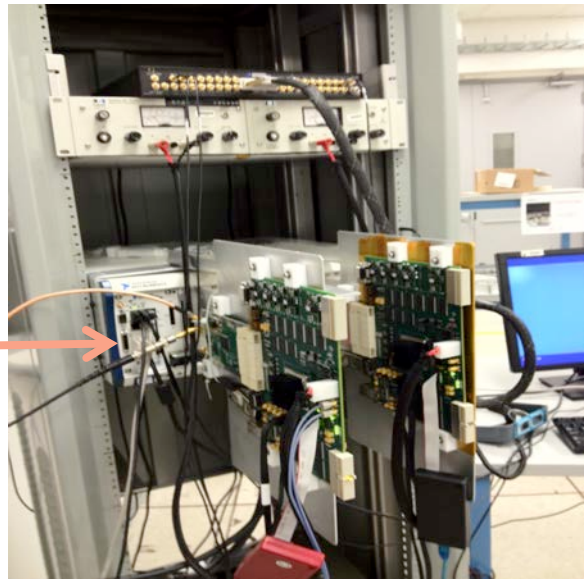

iFSP (First Stage Processor breadboard in an iBoard4); iSSP (Second Stage Processor breadboard in iBoard4); and a National Instruments cPCI chassis acting as RIC (Radar Instrument Controller)

© 2016 California Institute of Technology. Government sponsorship acknowledged.

SweepSAR/Digi-Cal "First Light"

Prototype SSP (Second Stage Processor)

Qualification Model TRM (Transmit Receive Module)

Antenna Port

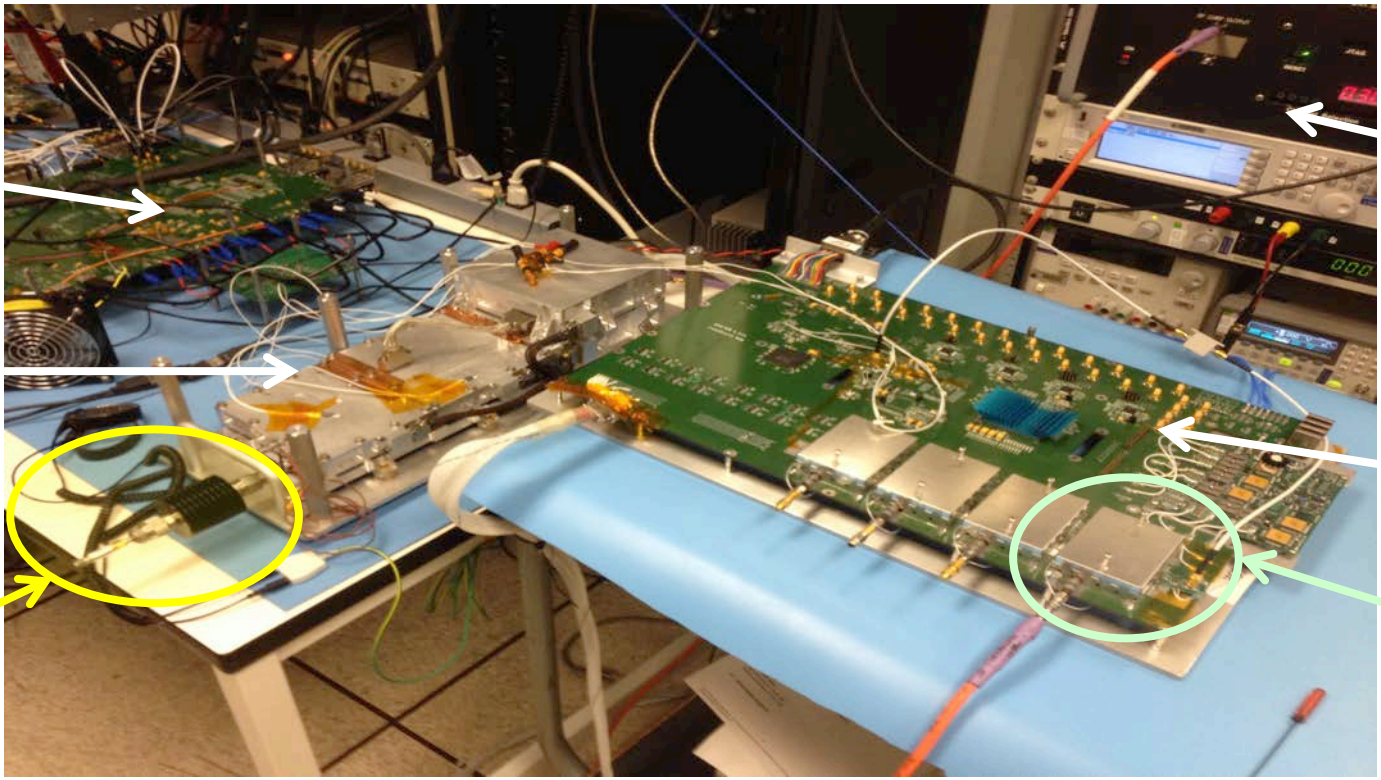

Breadboard Digital Waveform Generator & Upconverter

Prototype qFSP (quad-First Stage Processor)

1 of 4 ADCs

© 2016 California Institute of Technology. Government sponsorship acknowledged.

Transmit Calibration Result Example

4 channel pre-calibration

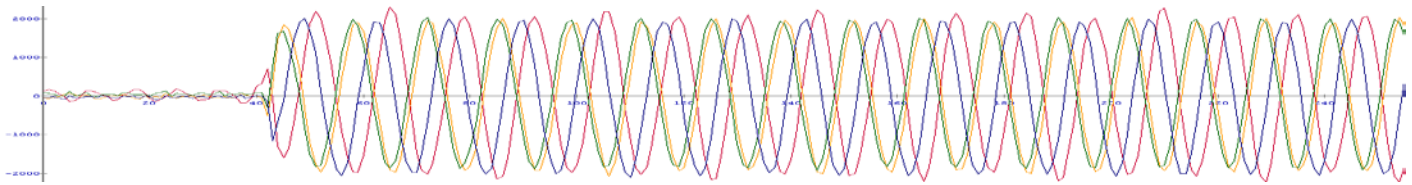

4 channel calibrated

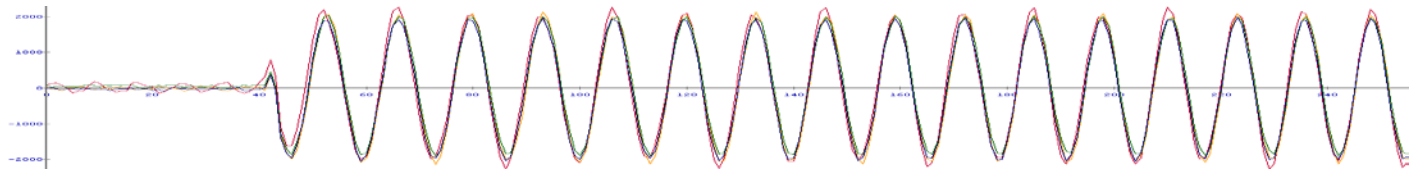

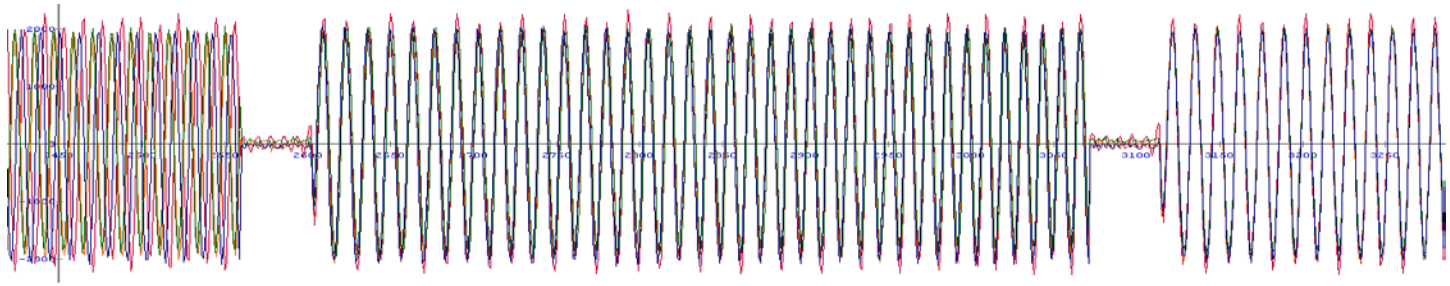

Chirps are out of phase

One iteration of the calibration algorithm pulls the chirps closer in phase

Chirps are in phase after second iteration of the calibration algorithm

Calibration enabled here

Calibration iterates

Calibration Complete

© 2016 California Institute of Technology. Government sponsorship acknowledged.

Summary

- NISAR will employ a novel architecture
- Individually digitized channels present both enabling advantage and unique challenges
- High-speed, on-board processing makes SweepSAR possible

- NISAR is currently in “formulation” phase (B)
  - Key L-SAR electronics fabricated to EM level
  - Major procurements executed
- NISAR conducted its Preliminary Design Review June 21-23, 2016
- NASA Key Decision Point to transition into “implementation” phase (C) scheduled for August 23, 2016

© 2016 California Institute of Technology. Government sponsorship acknowledged.

Backup