National Aeronautics and
Space Administration

Jet Propulsion Laboratory
California Institute of Technology
Pasadena, California

Magnetic Shield Design Modeling and Validation for SWOT Spacecraft Ka-band Extended Interaction Klystron

Edward Gonzales

Dalia Mcwatters

Jet Propulsion Laboratory, California Institute of Technology

SWOT EIK Analysis Overview

- SWOT Mission overview
- KaRIn instrument and EIK overview
- Methodology, initial modeling, and correlation to measurement
- Additional modeling with different shields
- Experimental shields built and measured

SWOT Mission

- NASA/CNES/CSA joint mission to survey surface water height with unprecedented accuracy (0.8 cm) and spatial resolution (4 km^2)
- Proposed 2020 launch
- TOPEX/Poseidon and JASON missions collected invaluable data on ocean heights, but have insufficient resolution for:
  - Coasts/rivers/lakes
  - Small scale ocean kinetics
- KaRIn instrument provides this capability

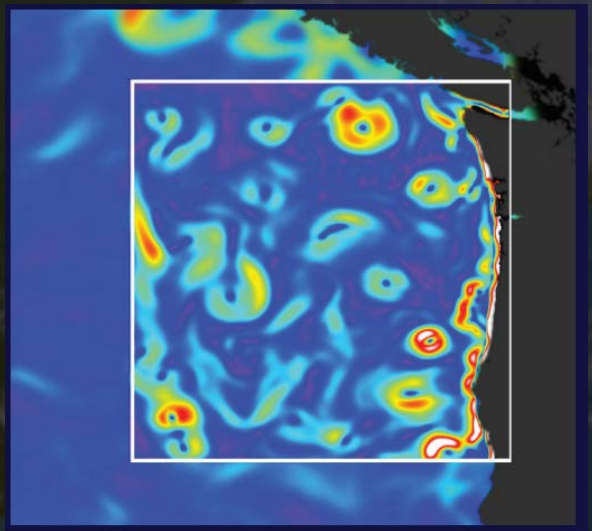

Simulated SWOT data off the coast of Oregon, USA.
Image; C. Ubelman, J. Howard, NASA

Source: http://swot.jpl.nasa.gov/files/swot/SWOT-applications-Poster1.pdf

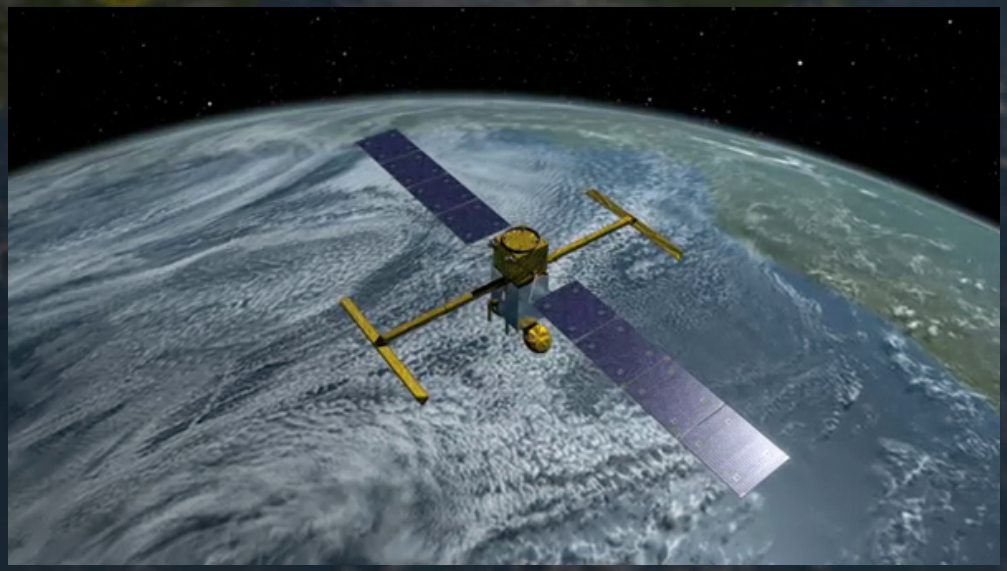

Source: http://swot.jpl.nasa.gov/gallery/multimedia/index.cfm?FuseAction=ShowMultimediaGallery&mmID=10

KaRIn Instrument and EIKs

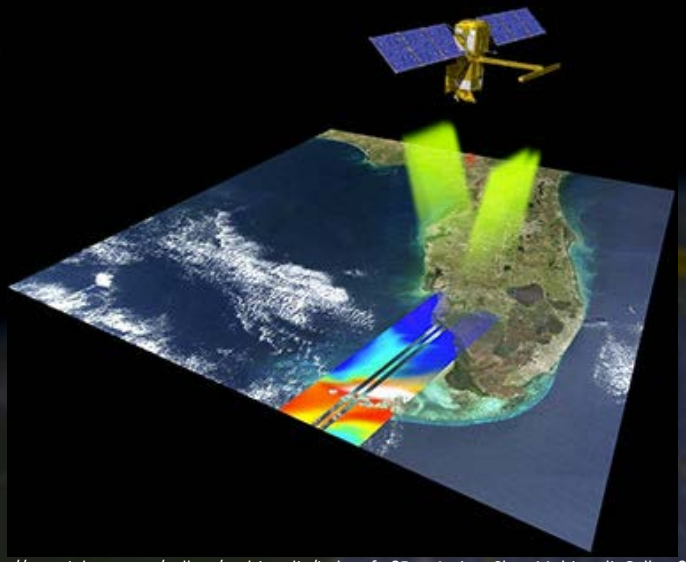

Source: http://swot.jpl.nasa.gov/gallery/multimedia/index.cfm?FuseAction=ShowMultimediaGallery&mmID=14

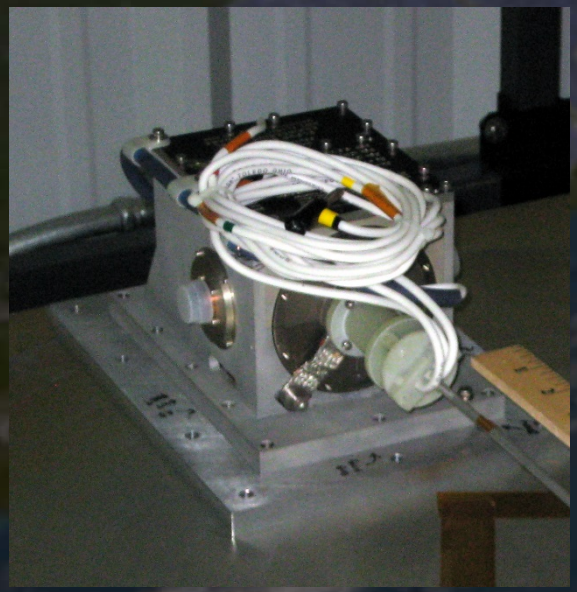

- **Ka**-band **R**adar **In**terferometer
- RF power generated by two Extended Interaction Klystrons (EIKs)
- EIKs contributed by CSA/CPI
- Redundant: two EIKs SWOT, one used in nominal operation
- EIK uses electron beam focused by large permanent magnet
- 63 A-m^2 dipole moment
  - 1 T (10000 gauss) measured at surface of magnet

Magnetic cleanliness

- Sensitive magnetic devices on SWOT
  - RF: ferrites, circulators, isolators
  - Attitude control system: magnetometers, gyroscopes
- EIKs were modeled in the past to evaluate effect of orientation
  - Found that EIKs should be oriented with dipole moments in opposition (self compensation)
- Exceptionally large field levels would still be present within the spacecraft
- Proposed shield parameters:
  - Thickness: 0.5 mm, 1.5 mm
  - Material: mu-metal, steel

Red → > 5 gauss
Blue → < 0.01 gauss

Worst case DC magnetic field [gauss]	
Subsystem	**No shield**
Location A	0.22
Location B	6.3
Location C	9.0
Location D	22.5

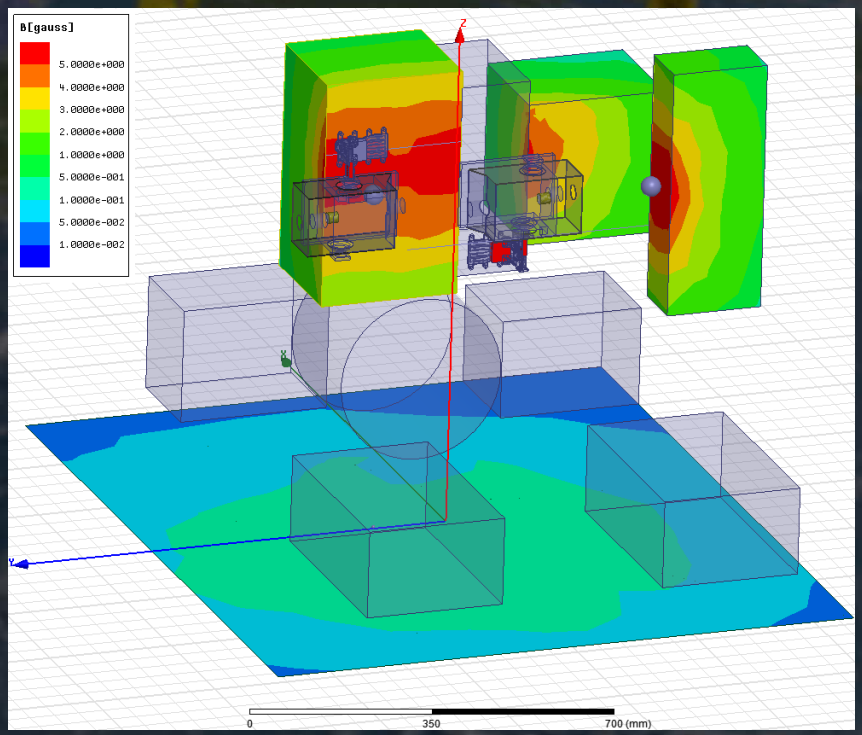

SWOT EIK Modeling Methodology

- ANSYS Maxwell finite element method (FEM) solver used
- Magnetic source: coil of wire
  - Coil chosen vs. permanent magnet models as it allows for straightforward calibration of magnetic source to measurement
  - 22 mm dia x 20 mm wire coil
- Excitation current determined by measurement correlation to Engineering Model EIK

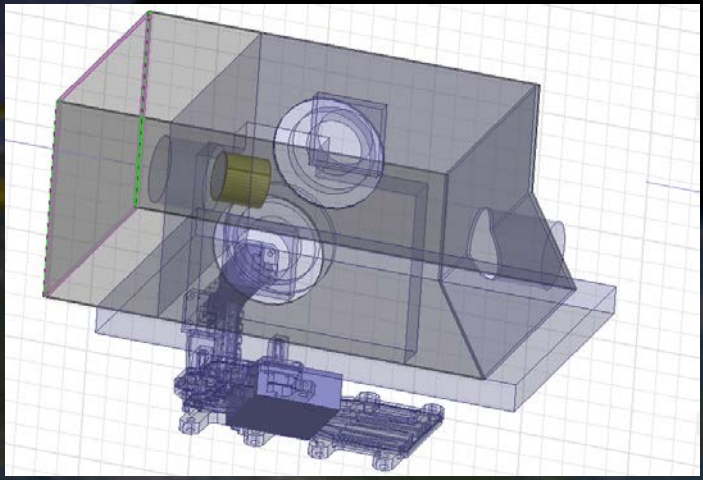

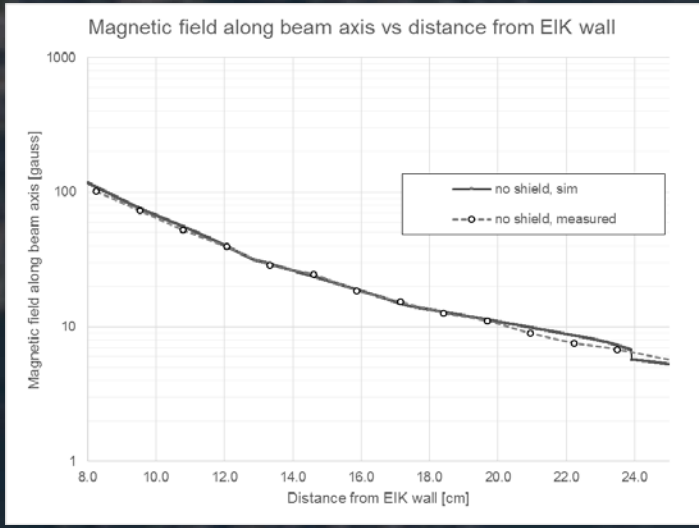

Saturation modeling: first pass

- Initial models with default parameters showed counter-intuitive results, run-to-run discrepancies, large numerical anomalies
- Default simulation parameters insufficient to accurately model
  - nonlinear B-H curve
  - high field levels

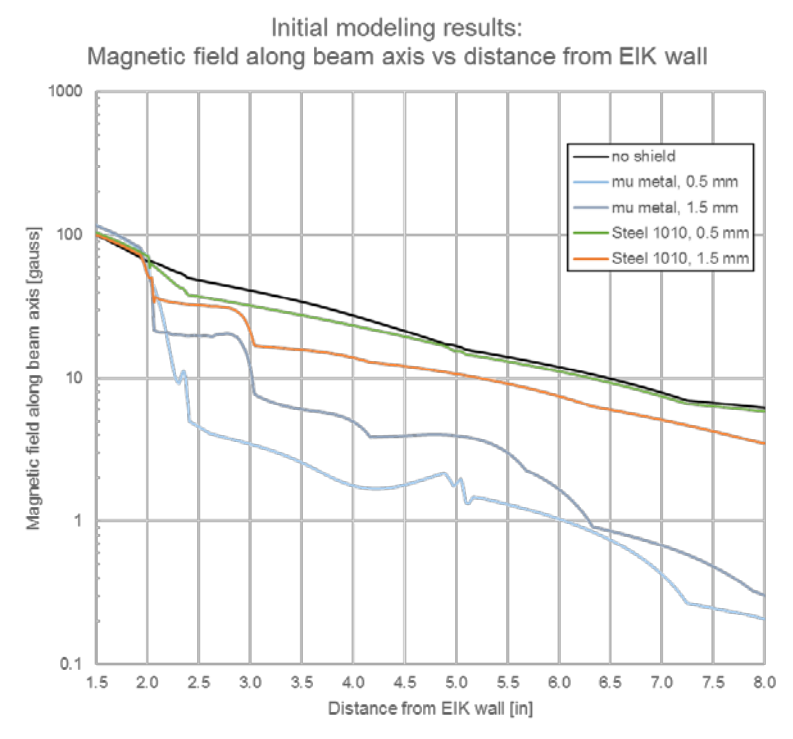

Resolving Saturation Anomalies

- Inaccuracies in nonlinear parameter extraction at high field levels needed to be addressed
- B-H curves extended
- Nonlinear residual decreased significantly
  - Changed from 1e-3 to 1e-7

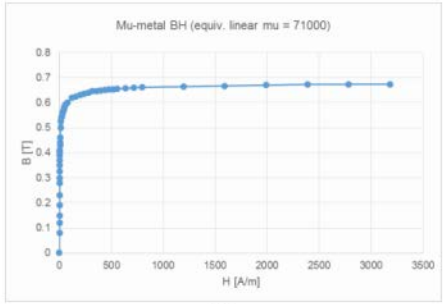

(a)

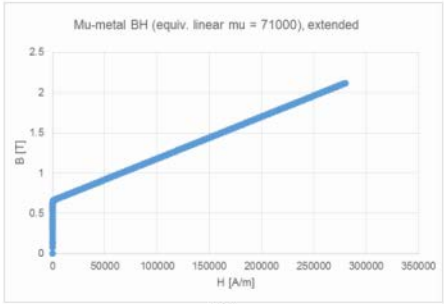

(b)

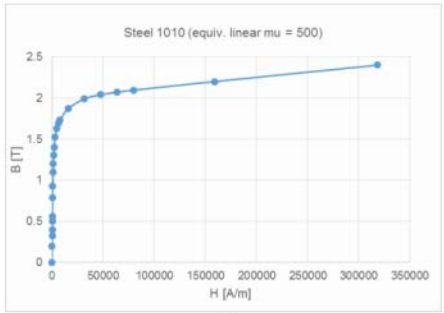

(c)

B-H curves for shield materials: (a) mu-metal, (b) mu-metal extended to H = 2.8 x 10^5 A/m. (c) cold rolled steel 1010

Corrected shield modeling results

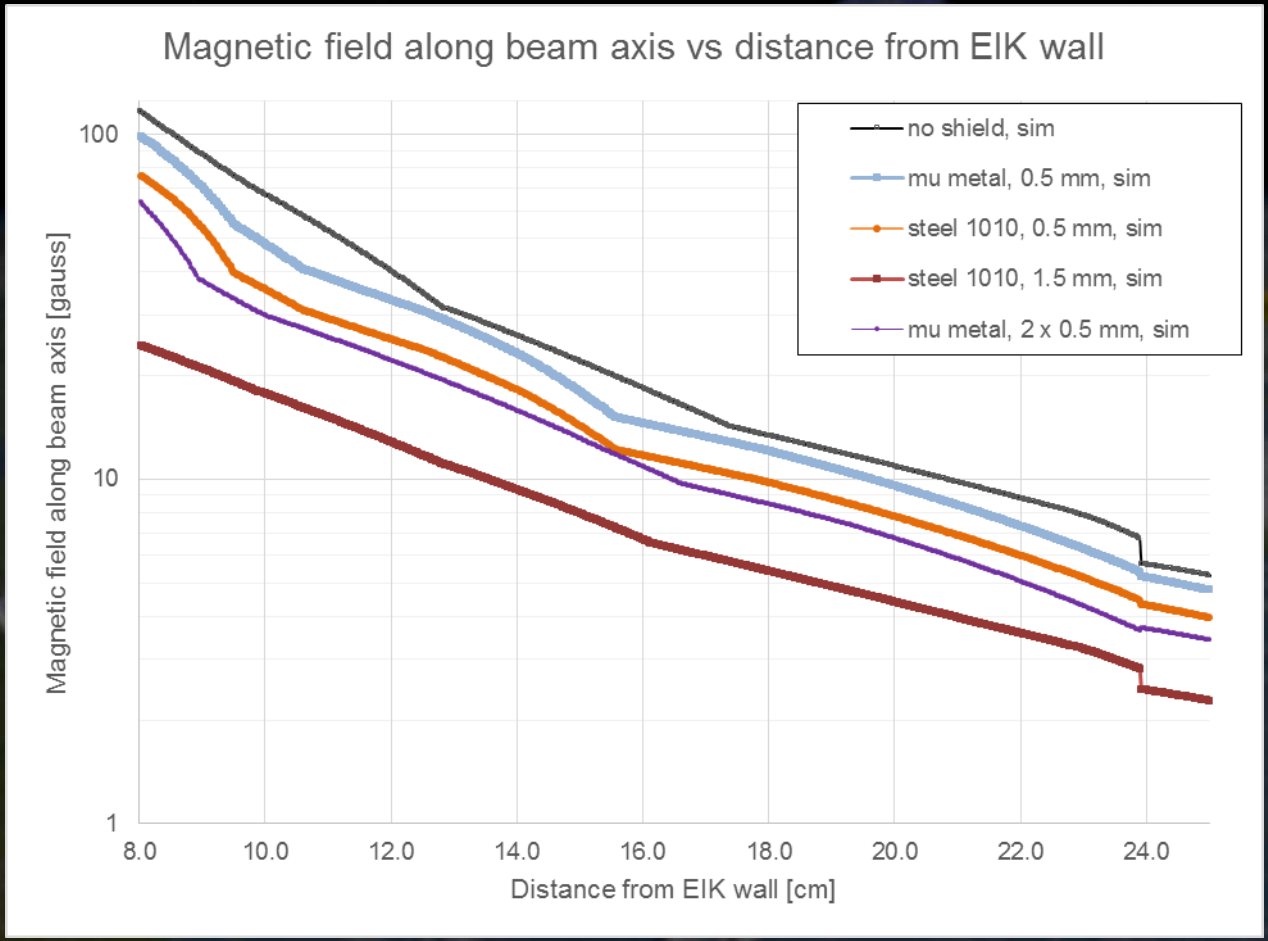

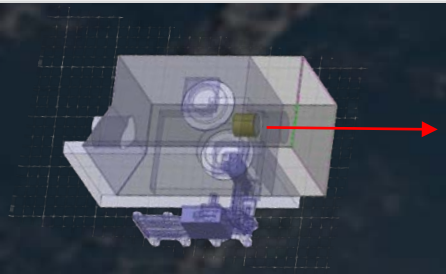

Spacecraft model with shields

Mu metal, 0.5 mm (20 mil)

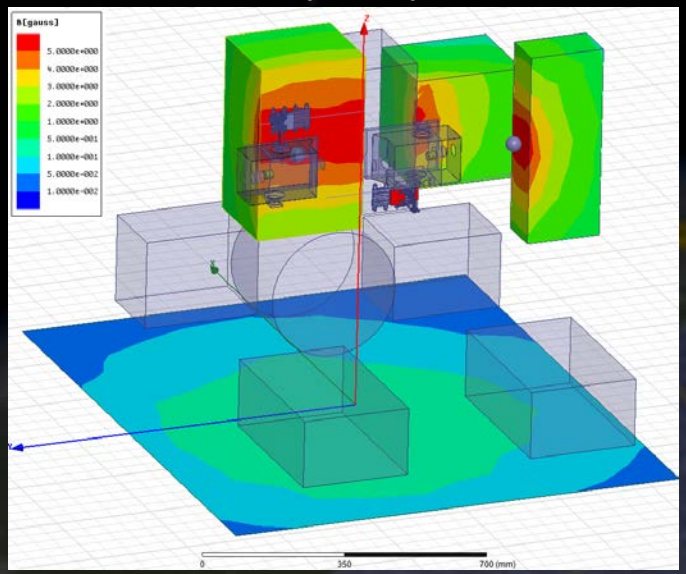

Steel 1010, 0.5 mm (20 mil)

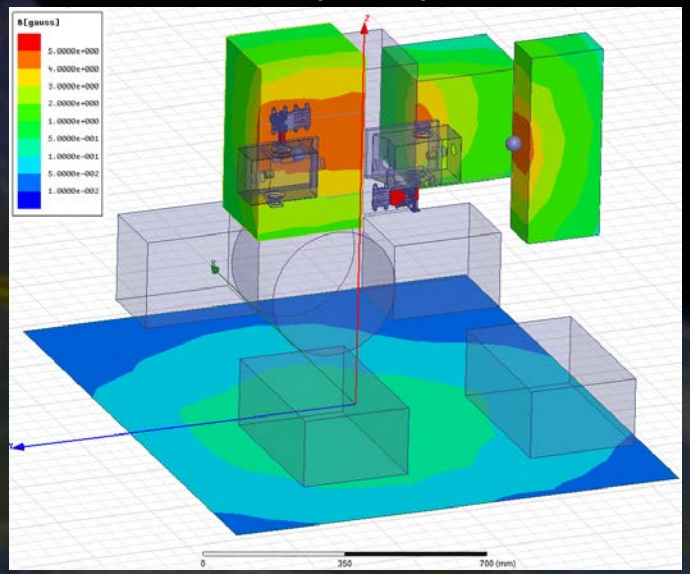

Worst case DC magnetic field [gauss]		
Subsystem	**mu metal**	**steel**
Location A	0.17	0.17
Location B	6.7	5.8
Location C	8.3	6.7
Location D	21.0	17.7

Red → > 5 gauss
Blue → < 0.01 gauss

Mu metal, 1.5 mm (60 mil)

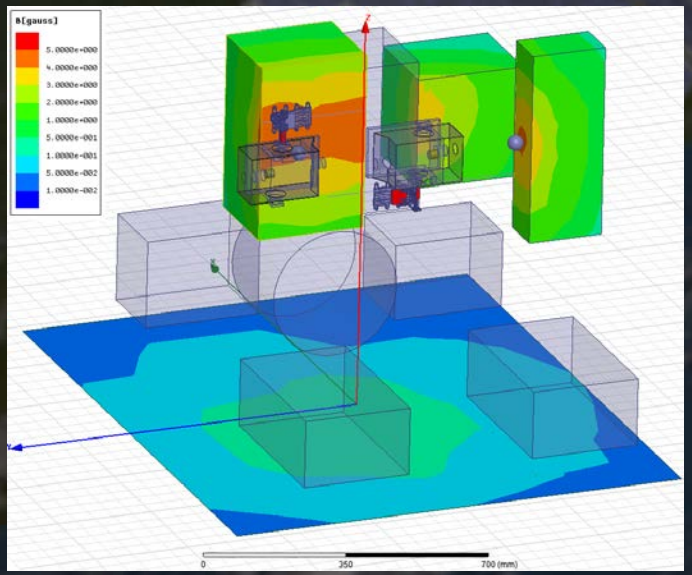

Steel 1010, 1.5 mm (60 mil)

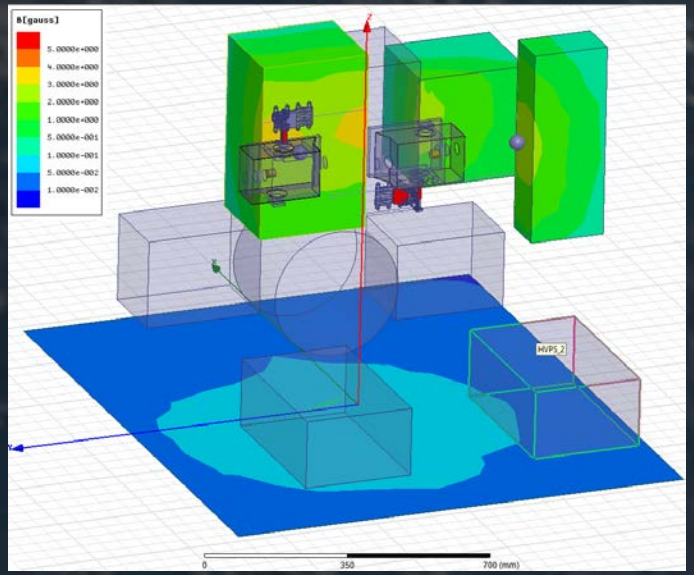

Worst case DC magnetic field [gauss]		
Subsystem	**mu metal**	**Steel**
Location A	0.16	0.10
Location B	5.4	3.6
Location C	5.6	3.5
Location D	16.6	9.8

Shields built

- Mu-metal 0.63 mm (25 mil), x2
- Cold rolled steel 1010, 0.43 mm (17 mil)
- Cold rolled steel 1010, 1.5 mm (60 mil)

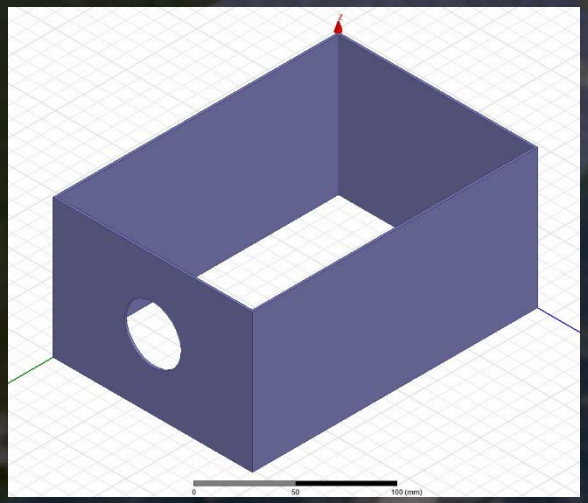

Measured values

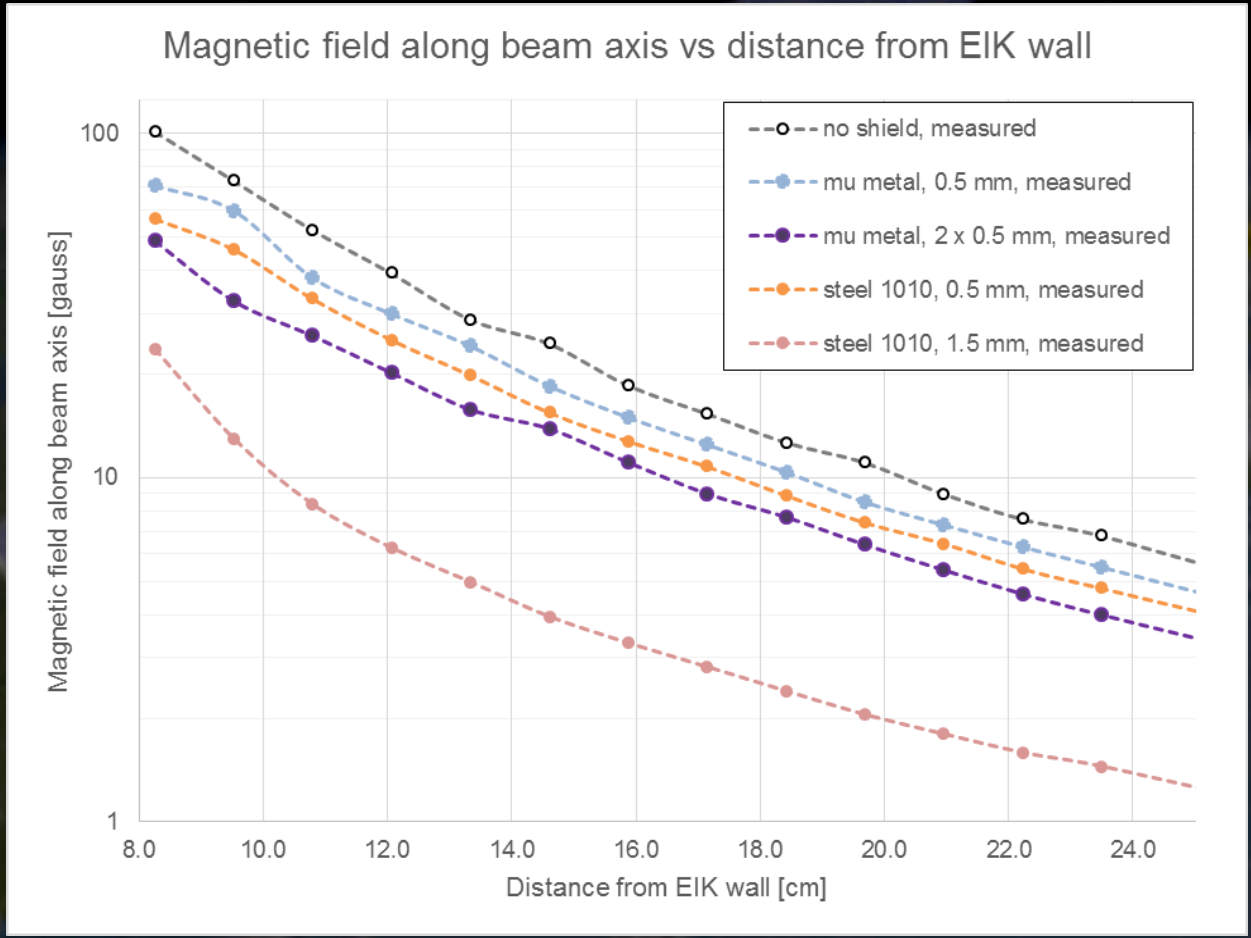

Measured with calibrated gaussmeter and single-axis probe

Model vs. measurement

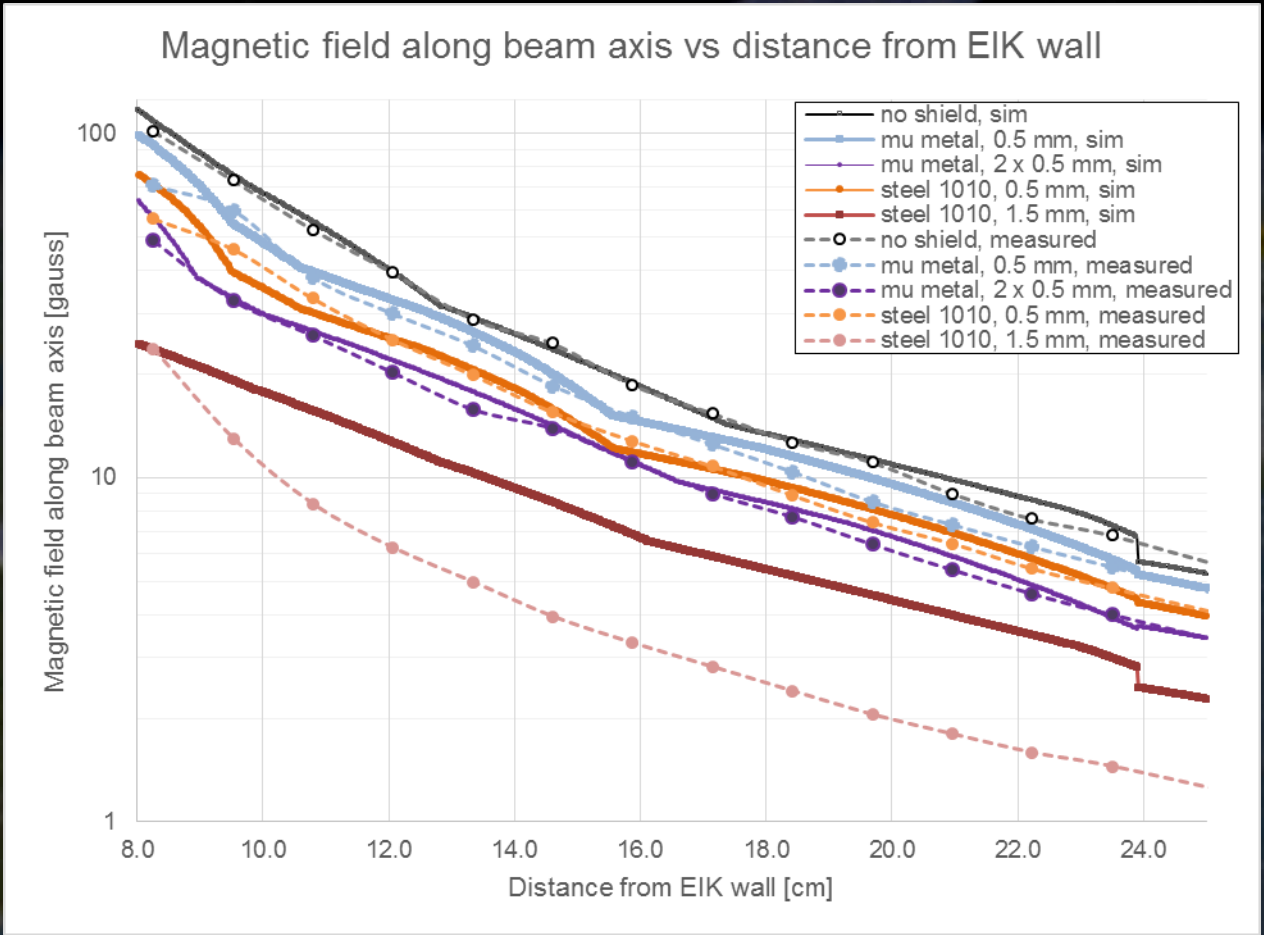

Model vs. measurement: difference

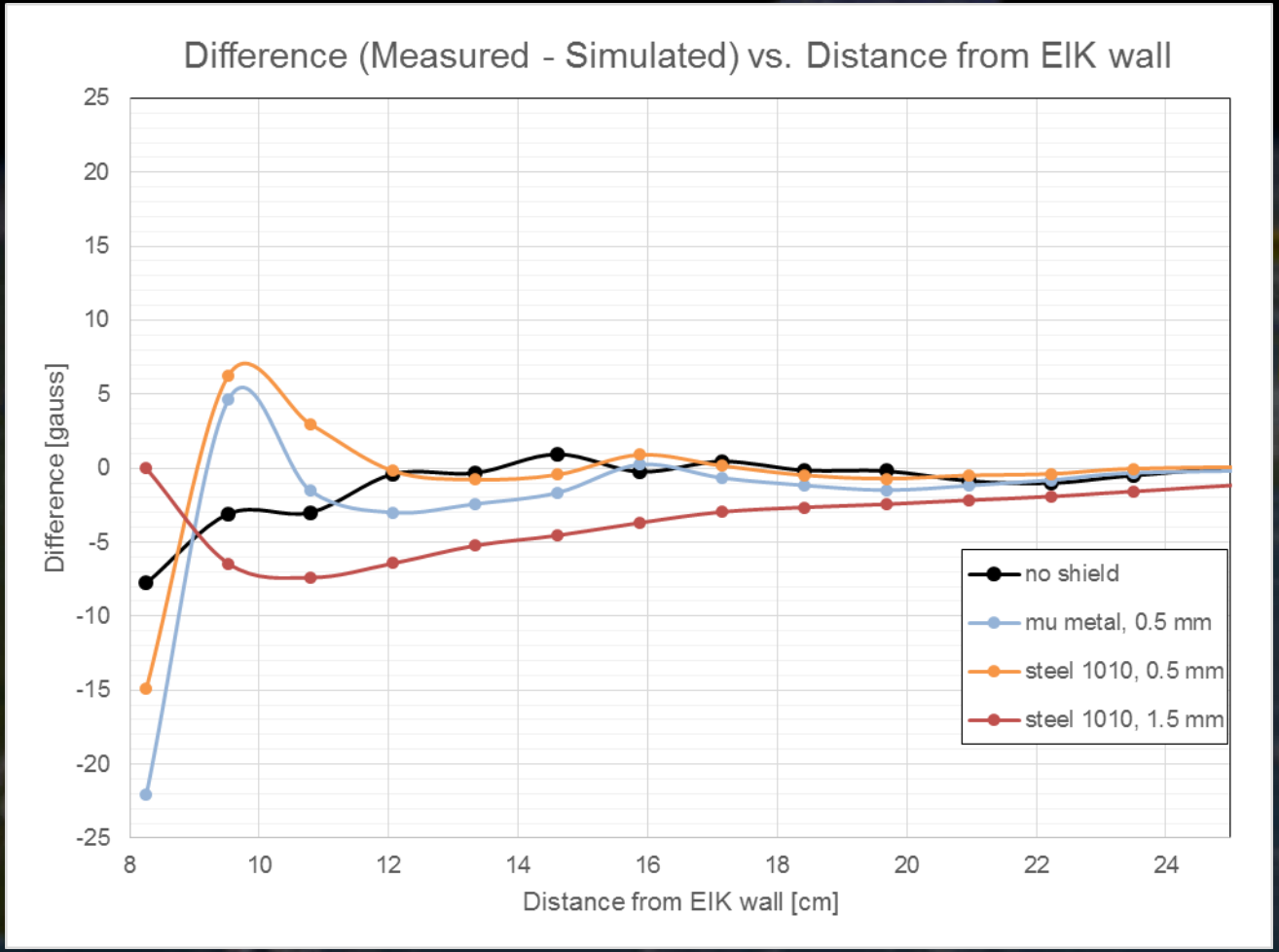

Model vs. measurement: locations of interest with steel

- Previous measurements were single-axis
  - Assumed a dominant field component along assumed dipole axis
- Simulated average B-field contribution from one EIK in a sphere at location of interest
- Used VGM 3-axis gaussmeter to account for all field components, especially in near field
- Field averaged in a sphere roughly on the order of probe placement capability

$$|\mathrm{B}_{avg,V}| = \frac{\iiint_V |\mathrm{B}(x,y,z)| dv}{\iiint_V dv}$$

	Distance to magnet [mm]	0.5 mm steel shield			1.5 mm steel shield		
		B (sim) [gauss]	B (meas) [gauss]	Diff [gauss]	B (sim) [gauss]	B (meas) [gauss]	Diff [gauss]
Location 1	107	12.71	8.84	-3.87	5.54	1.48	-4.06
Location 2	158	2.36	1.30	-1.06	1.22	0.28	-0.94
Location 3	389	6.40	7.55	1.15	2.89	2.17	-0.72
Location 4	356	2.19	3.85	1.66	1.08	0.22	-0.86
Location 5	798	0.10	-0.24	-0.34	0.04	-0.45	-0.49

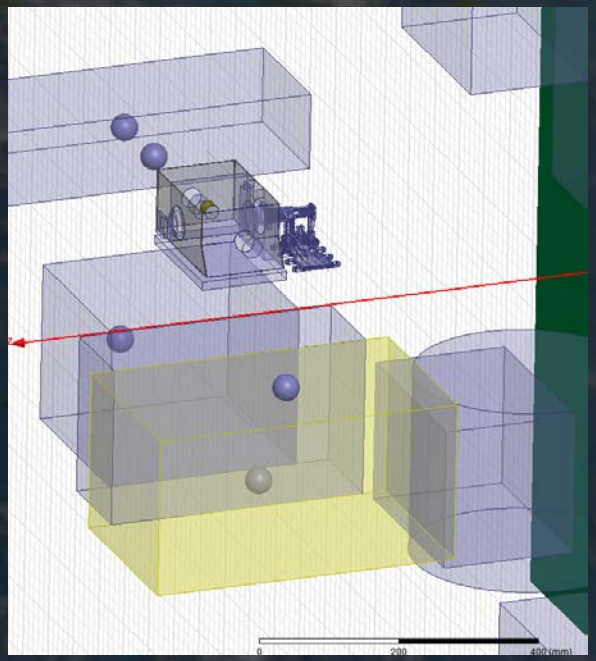

Conclusion

- FEM modeling techniques can guide magnetic cleanliness design trades and requirements
- Modeling saturation effects in high field environments can lead to significant error without careful consideration