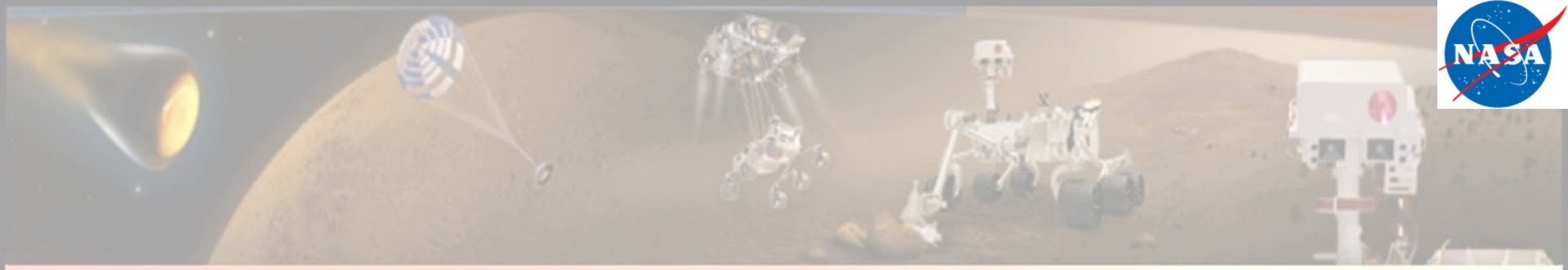

Mars Science Laboratory Thermal Loop Mystery: Preventing a Heart Attack on Mars

By

Michael R. Johnson

Jet Propulsion Laboratory

California Institute of Technology

Introduction

- The Mars Science Laboratory (MSL) rover and spacecraft utilize two mechanically pumped (Heart) fluid loops for heat transfer
- Heat is transferred between the rover electronics, the outside environment, and the Thermoelectric Generator with the fluid system

Introduction (continued)

- The heat transfer fluid (Blood) is Freon
- To account for the large thermal expansion of the Freon, a gas-over-fluid accumulator (Spleen) is incorporated into the fluid system
- This accumulator utilizes a bellows as the barrier between the fluid and gas sections

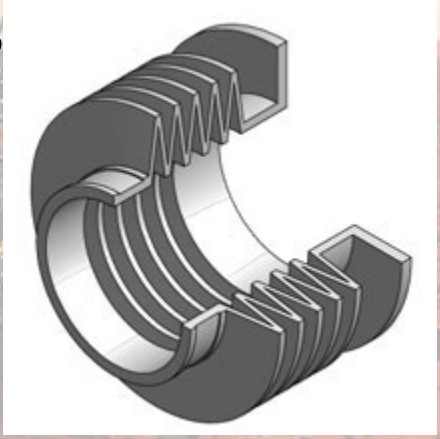

The MSL Mission

- The MSL mission consists of four phases:

Launch Phase

Entry, Descent, & Landing Phase

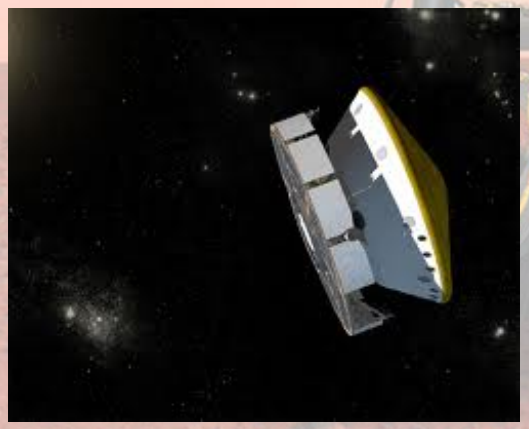

Cruise Phase

Surface Operations Phase

Heat Sources

Internal Electronics Assembly

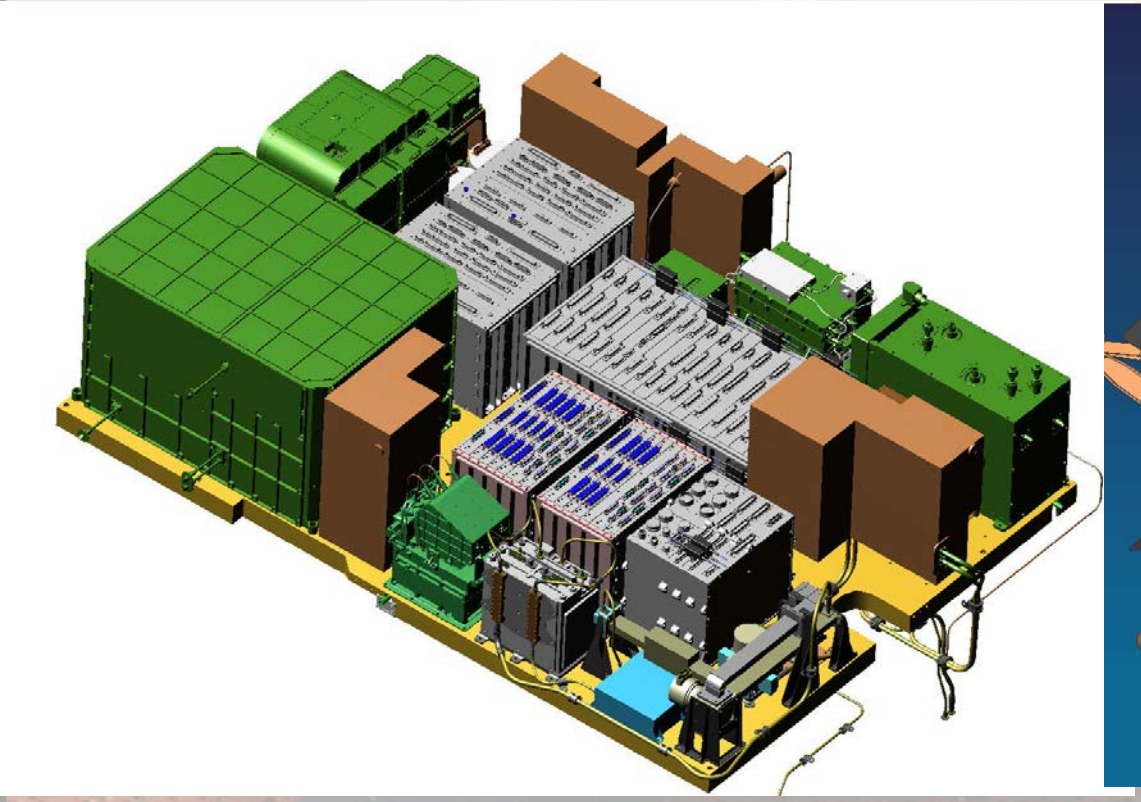

Thermoelectric Power Generator
2,000 watts of heat

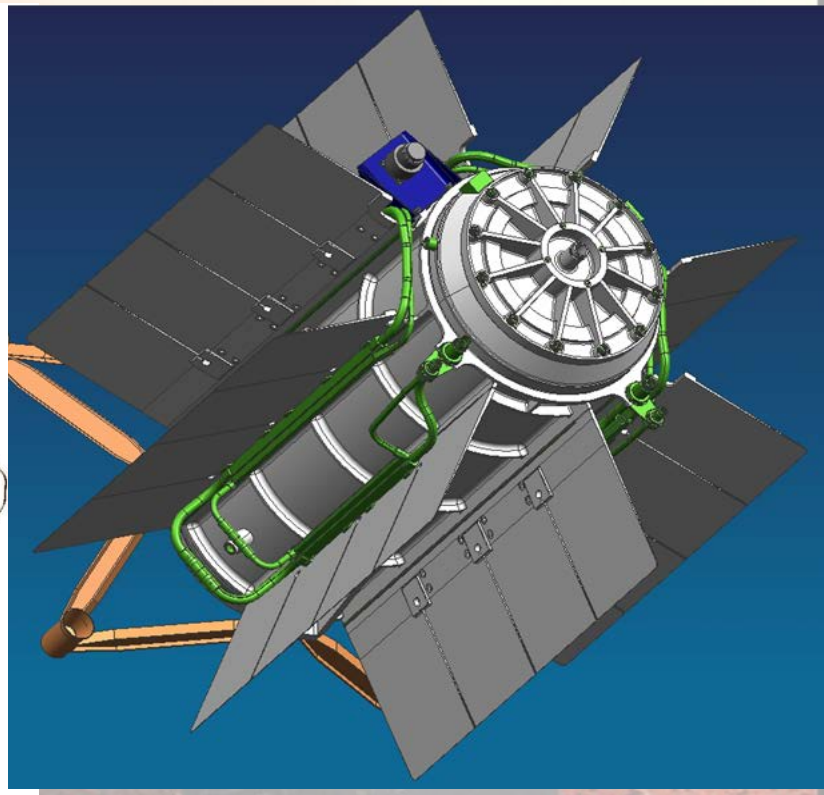

Heat Source Locations

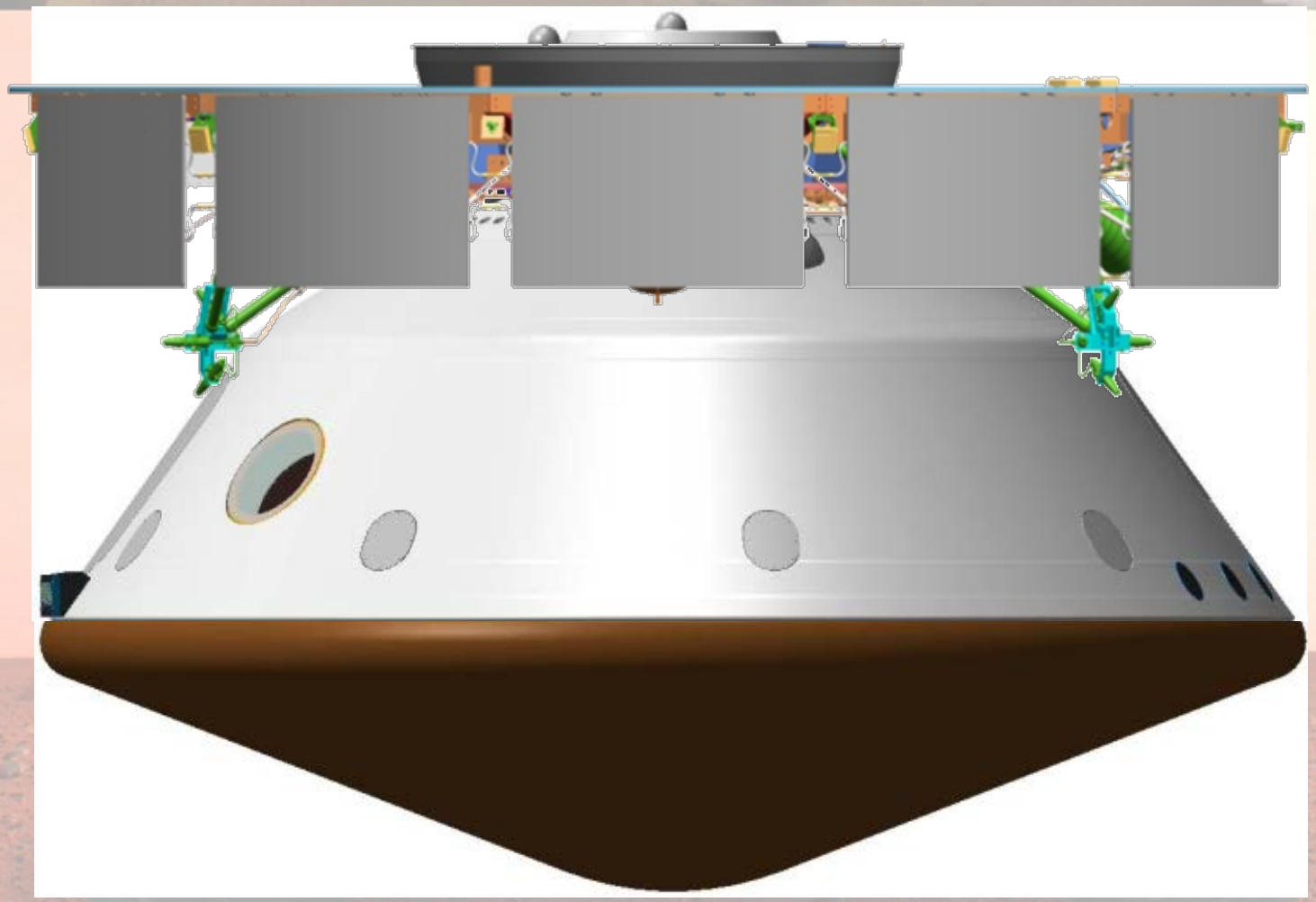

Inspiration from Nature

- The Heat Rejection System (HRS) consists of a lot of fluid lines
- Nature provided some inspiration in solving how to get the heat from the inside of the rover to the radiators on the Cruise Stage while keeping the rover internals alive

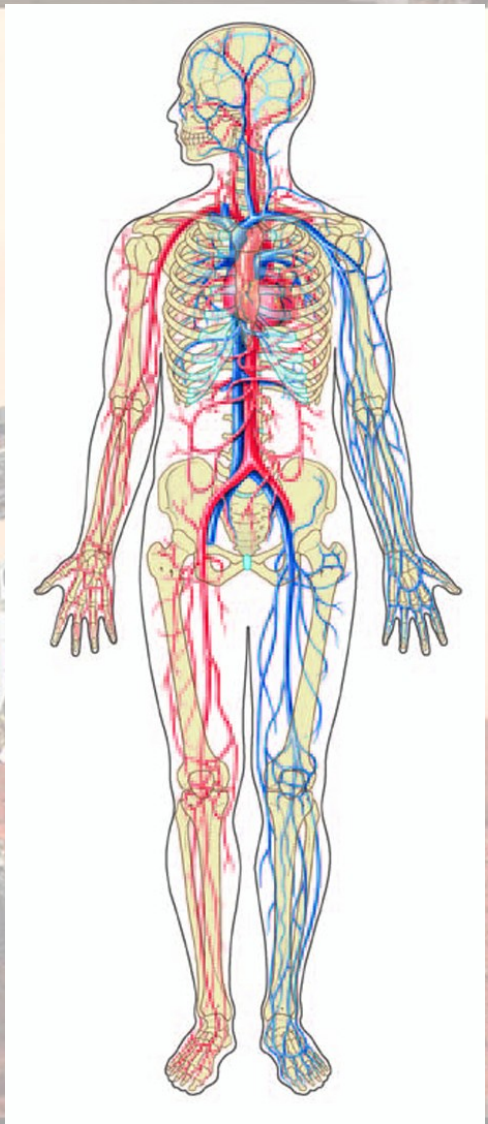

Heat Rejection System
Rover Circulatory System

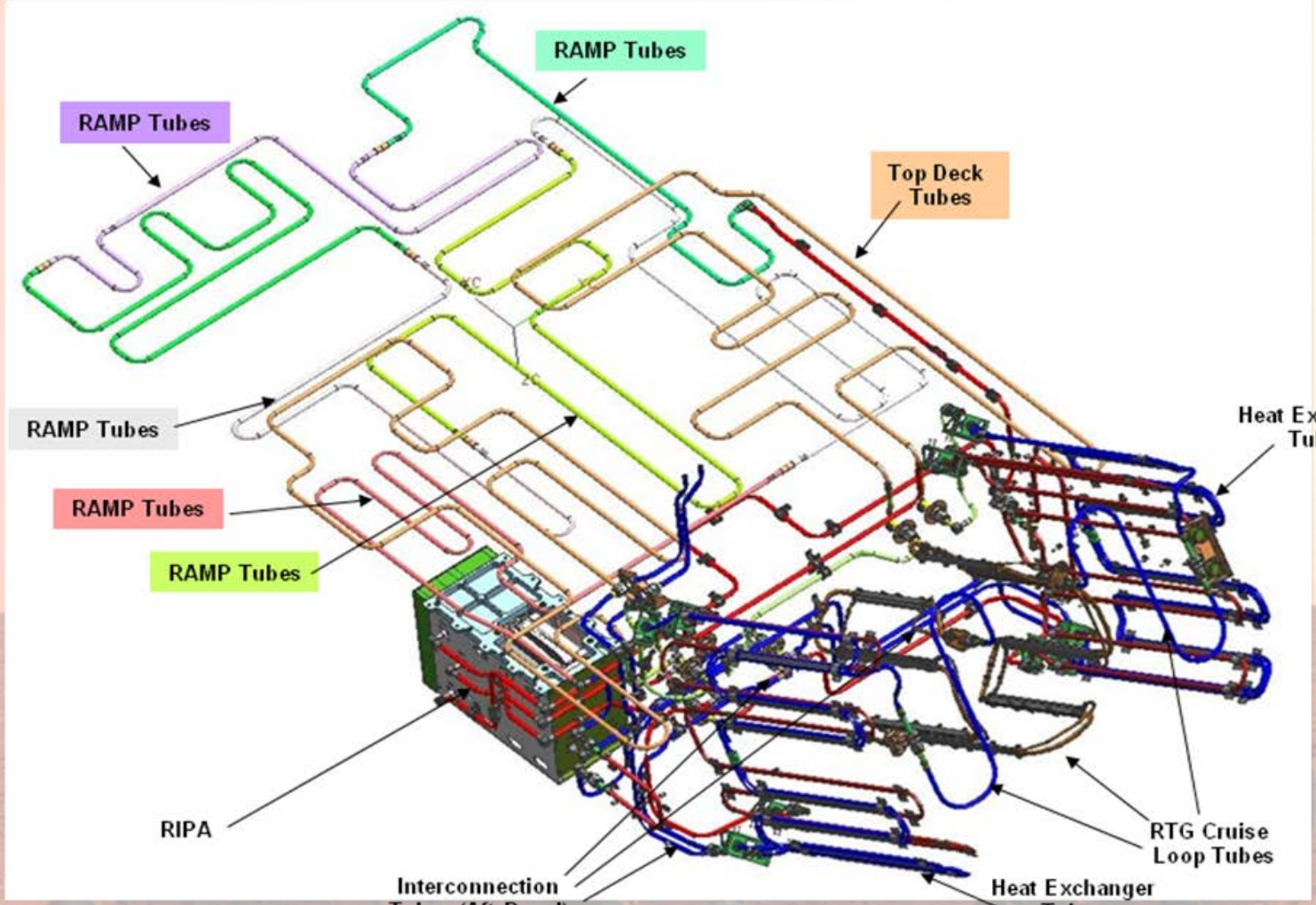

The Heart of the Rover

Rover Integrated Pump Assembly (RIPA)

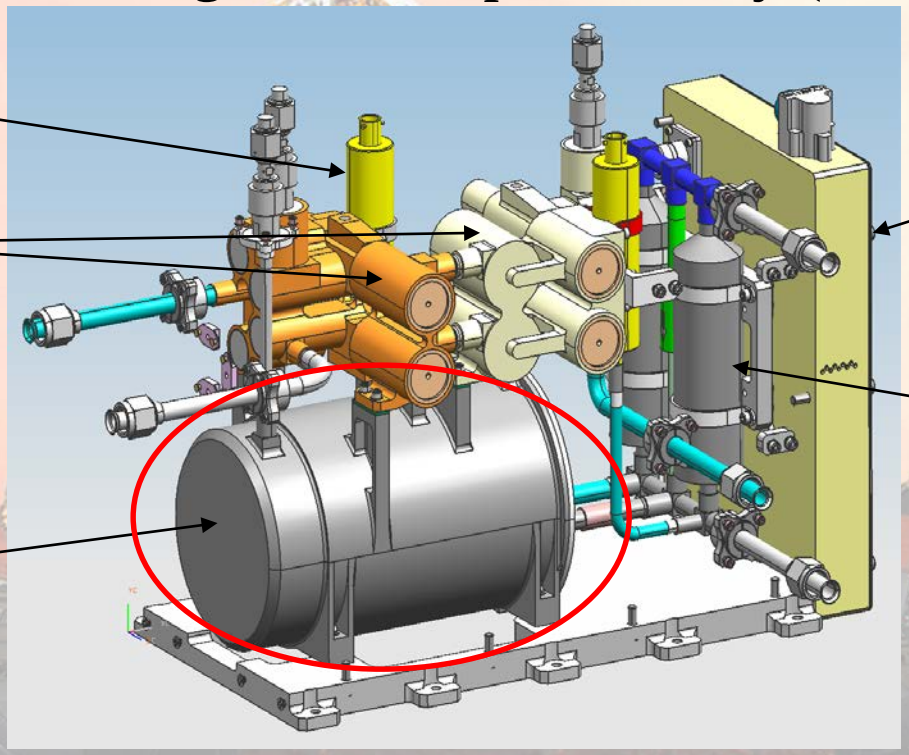

Accumulator Construction
(Rover Spleen)

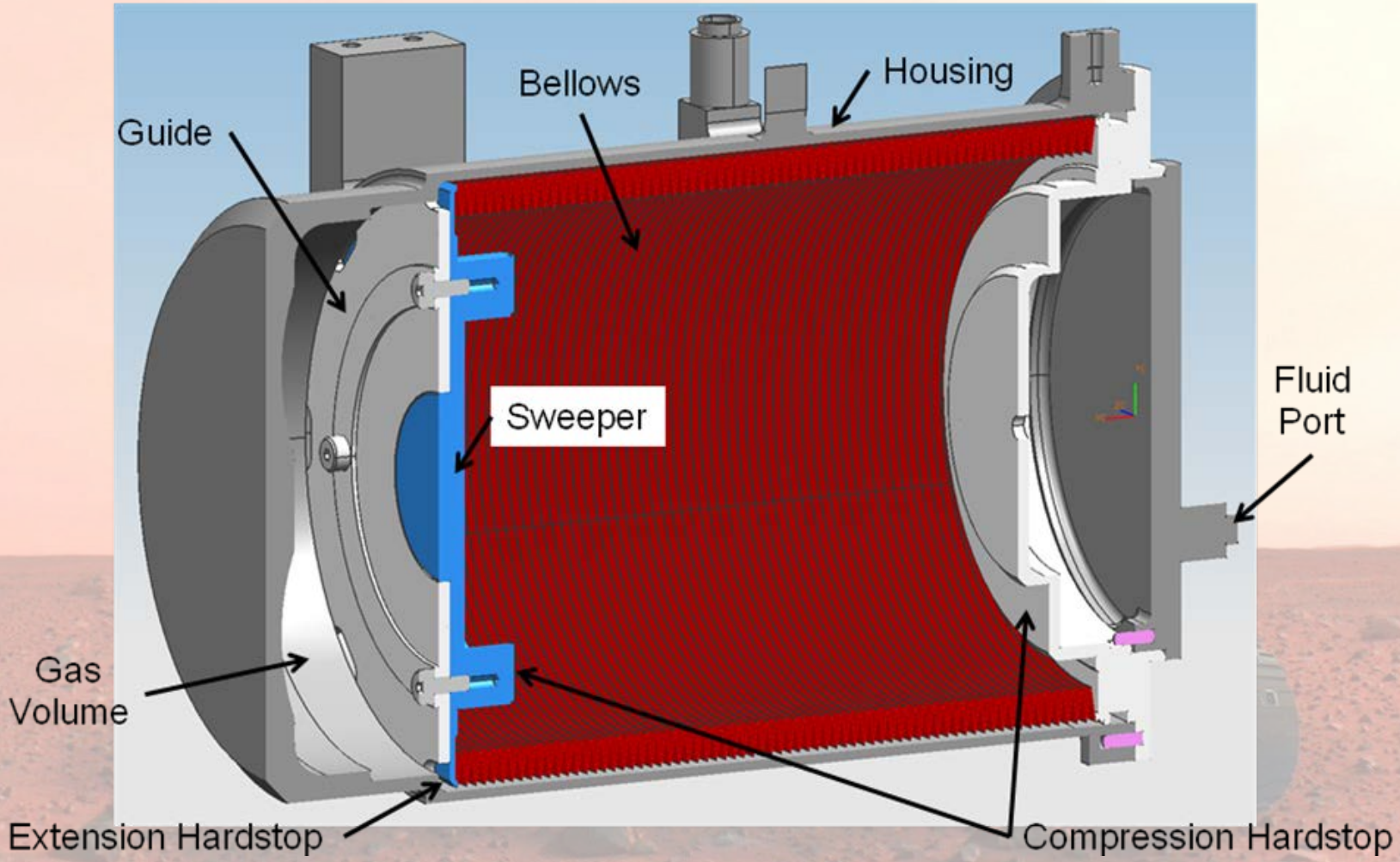

Accumulator Functional Checkout

- Fill the Accumulator with fluid
- Drain the accumulator into a graduated cylinder until the pressurized gas drives the bellows to the minimum fluid volume hard stop
- Determine the delta-volume of fluid the accumulator can hold from the graduated cylinder

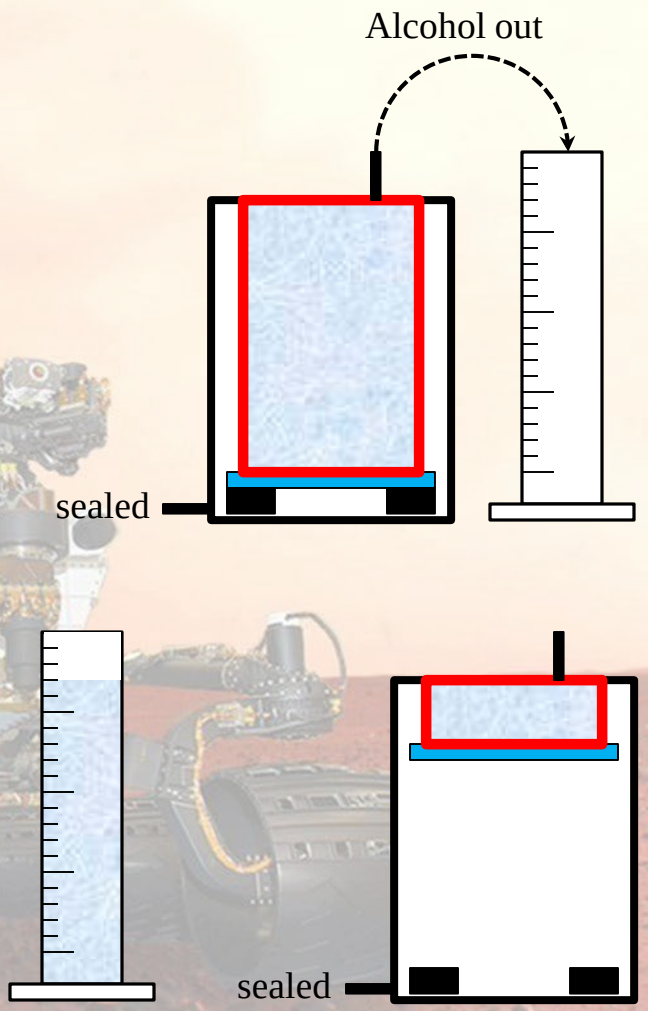

The Mystery of the Lost Volume

- During functional checkout of the last accumulator assembly, the fluid volume capacity was less than half the expected value
- The Rover assembly was preparing to go into final testing → VERY LIMITED RECOVERY TIME

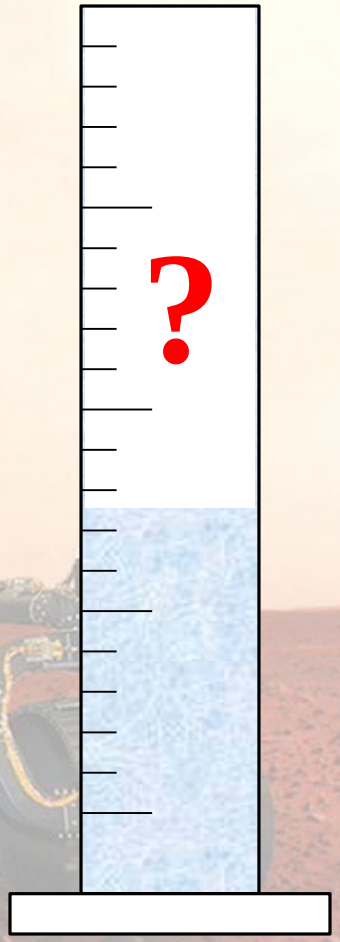

The Mystery of the Lost Volume (continued)

- The process of removing the fluid and replacing it was repeated many times
- There was almost no change in the fluid volume the accumulator would hold between tests

Searching for Clues
Round 1

- X-ray imaging showed the jamming of the bellows to be very repeatable, so measurements were taken directly from the X-Ray image

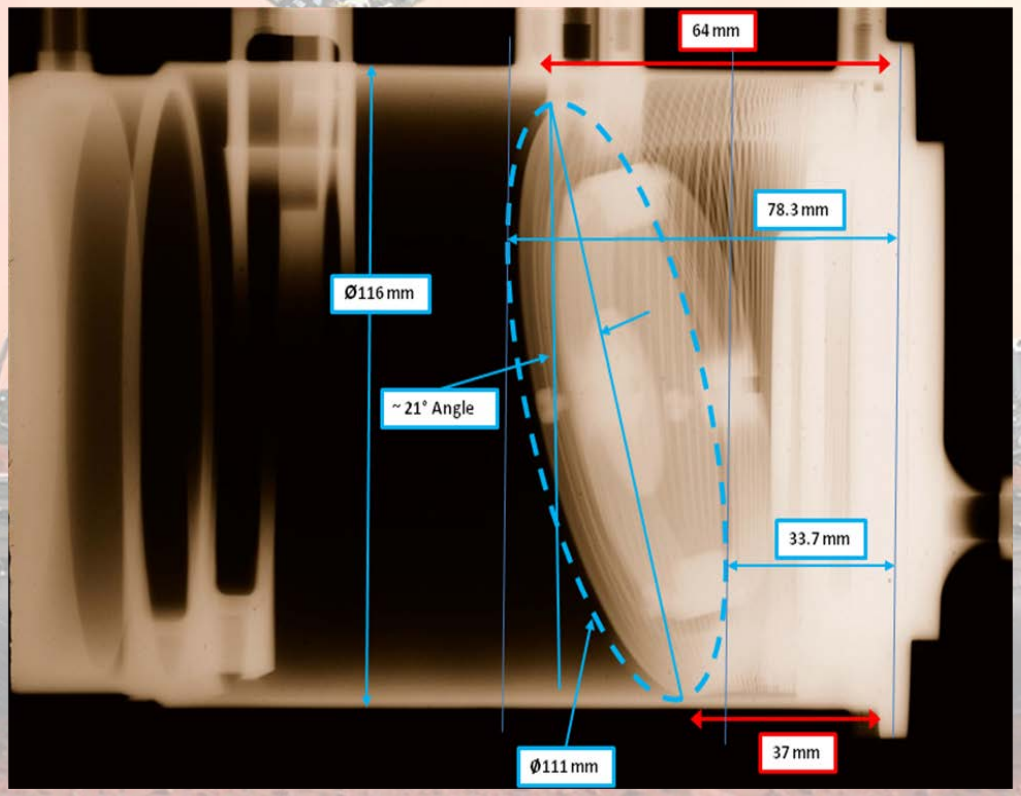

Searching for Clues Round 1 (continued)

- The location of the jamming was so repeatable and held back a high force of 84 lb from the pressurized gas, it must be due to a significant physical flaw
  - Step in the bore
  - Locally damaged spot
  - Other . . .
- Clearly, it will be obvious once the unit is opened

Searching for Clues
Round 1 (continued)

- With great confidence, the unit was opened and we found . . .

NOTHING !!

- . . . but a tiny section of tape adhesive from a previous rework cycle

Searching for Clues Round 1 (continued)

- How could that tiny bit of residue hold back 84 lb?!

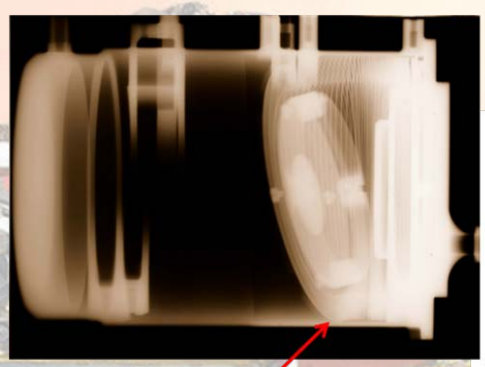

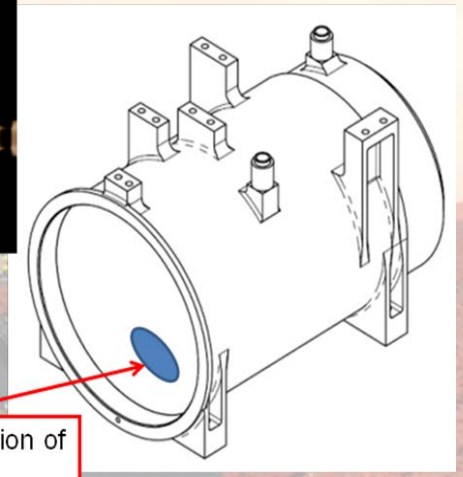

Mystery Solved?

- Since:
  - The location of the adhesive was in the same spot as the jam point as indicated by the X-Ray images
  - There were no other features or damage that could possibly catch on the edge of the bellows
- The adhesive <u>must</u> be the cause of the jamming and it was cleaned off completely

Mystery Solved?

- The unit was reassembled and the functional checkout test repeated
- The result of the testing indicated

NO CHANGE

in the behavior of the assembly

- The jamming location did not appear to move at all!

Searching for Clues
Round 2

- The variables that affect the tipping and jamming phenomenon are
  - Surface finish of the sliding components
  - Coefficient of friction between the sliding parts
  - Piston/bore clearance
  - Piston length/diameter ratio
- The length to diameter ratio of the existing design was tiny
- The obvious solution was . . .

Searching for Clues
Round 2

Make the piston longer!

- Increasing the length of the piston beyond 25 mm would require some additional modifications:
  - Move several pieces of electronics in the assembled rover
  - Change the outer wall of the rover body to make space
  - Redesign several structural elements of the rover chassis

- These were not popular solutions

Searching for Clues Round 3

- In order to understand the detailed forces making the bellows jam, an analysis model was prepared

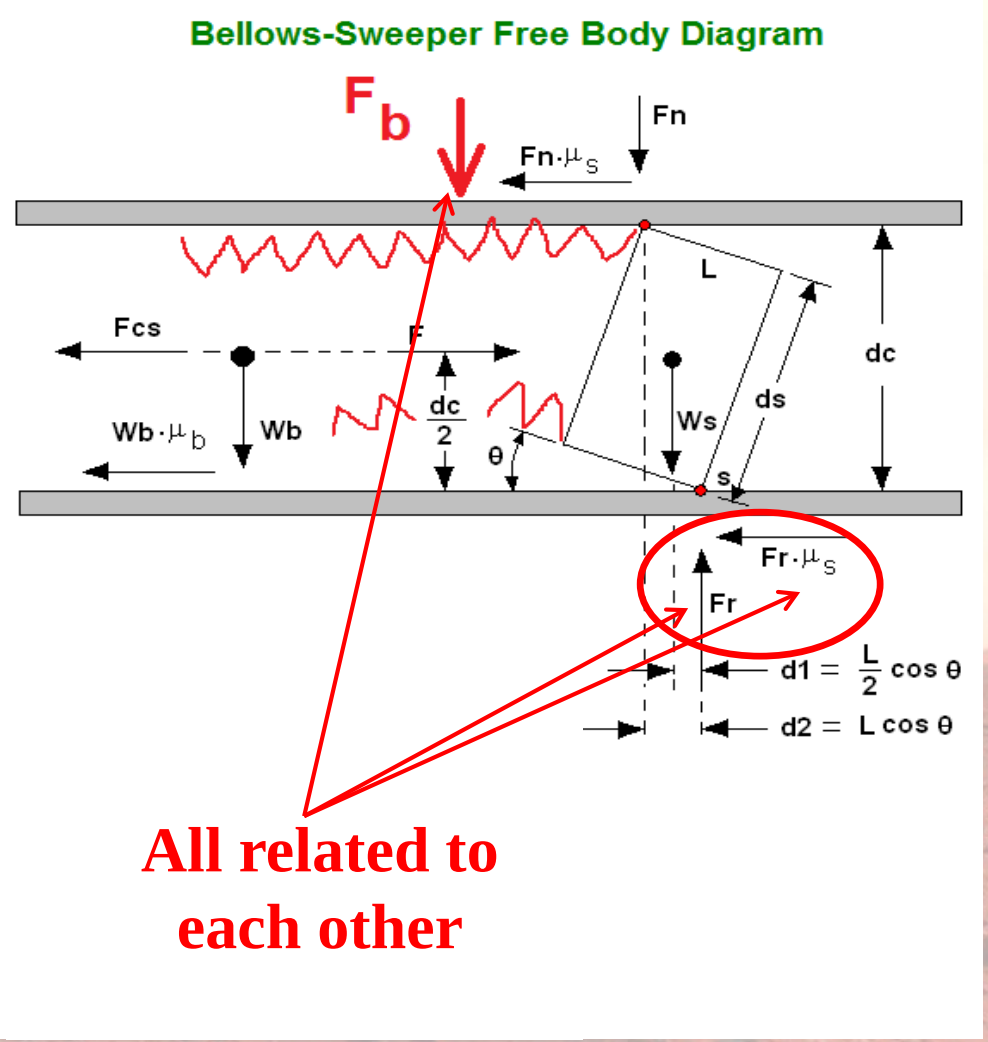

Variable Analysis

Confirmation of What was Already Known

- The tipping of the end of the bellows is a self-energizing phenomenon
- Friction is a critical element in determining whether jamming will occur
- The piston/bore clearance along with the length/diameter ratio of the piston both affect the initial tip angle of the end of the Bellows and the initiation of the jamming condition

Variable Analysis

Understanding Relationships

- The contact points between the Bellows end and the housing diameter move around the housing bore and this is the primary source of the self-energizing behavior
- As surface finish, friction coefficient, piston/bore clearance, and length/diameter ratio are varied, the jamming behavior transitions relatively smoothly from guaranteed jamming to non-jamming

Analysis Conclusion

New Realization

There was no group of variable values that fit within the rover that would guarantee a non-jamming solution

Design Change Options

- The options for changes were very limited due to schedule and volumetric constraints:
  - ~~New bellows – too much time~~
  - ~~Reducing the volume requirement of the accumulator~~
  - Improving the guiding of the end of the bellows
  - ~~Increase housing length to accommodate a longer piston, taking up more room in the already packed rover body~~
- The third option was the only one that could be pursued

Design Change Pursued

without certainty of success

- The housing had some internal volume that could be used for improved guiding of the end of the bellows

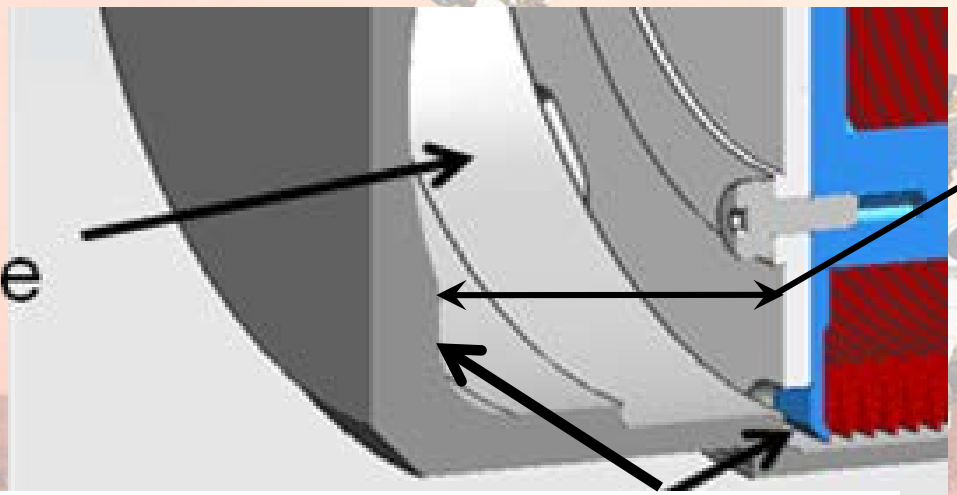

The housing bore could be extended to this point without affecting the outer envelope of the accumulator assembly

Design Change Pursued

without certainty of success

- Adding a guide to the end of the existing bellows assembly that reached into the end volume of the housing would provide:
  - A greater Length/Diameter ratio
  - Better tipping resistance for the end of the bellows
  - With the proper material selection, a low friction interface to the housing could be acheived
- Plastics were the clear choices for low interface friction
- These plastics have a High Coefficient of Thermal Expansion (CTE)

New Guide Design Feature Considered

- In order for high CTE materials to be useable, a slotted design was included in the testing – similar to piston rings in an engine

Visible Guide to Housing Clearance

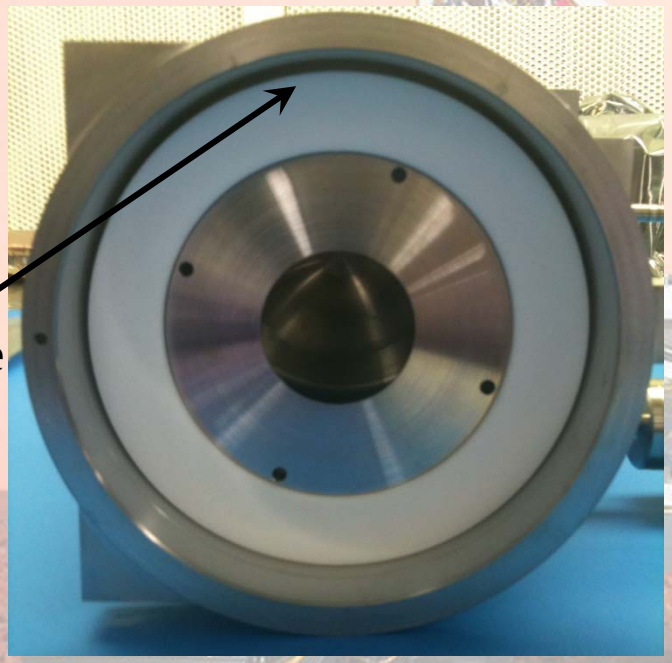

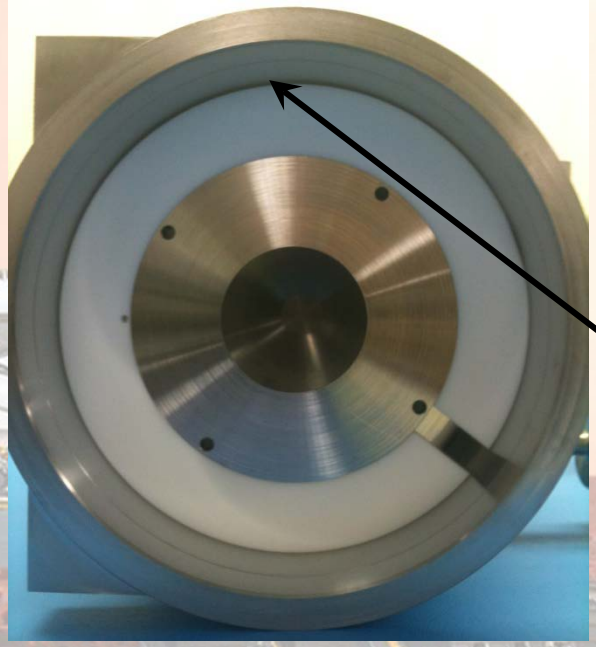

Guide to Housing Clearance Closed Up

Solid and Slotted designs of the guide on Test Mandrel and inside the Test Housing with the largest possible radial clearance. Note that the slotted design springs outward, closing the radial clearance under all conditions. (the terms Solid and Slotted refer to the circumference of the guide)

Guide Design Testing

- Different polymeric materials were tested with solid and slotted designs
  - Torlon®
  - Vespel®
  - Delrin®
  - Teflon® glass filled
  - Virgin Teflon®
- Testing was performed manually using a hand operated test fixture

Guide Test Results

- Only the two Teflon versions passed the testing and only with the slotted design
- Glass filled Teflon generated undesirable wear particles between itself and the housing bore

- Virgin Teflon was selected for the final design

Final Design Implementation

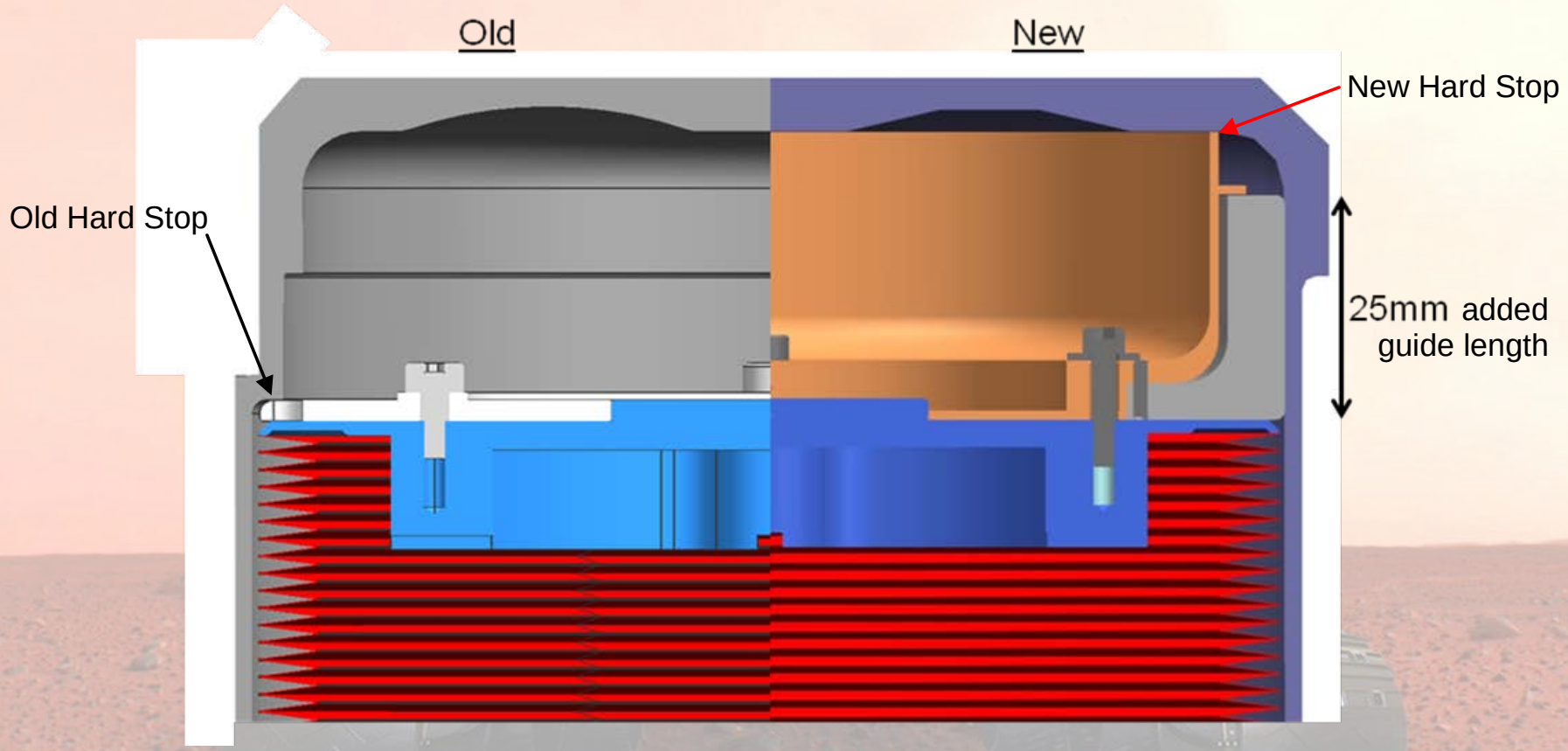

Original and Final designs of the end of the bellows assembly. The figure shows the bellows stroked to the maximum fluid condition and against the end-of-stroke hard stop for both design versions

Is the Final Design Acceptable to Send to Mars and Rely on for Years?

- Design is loosely based on analysis and mostly based on qualitative manual testing
- New housings were machined and polished
- The new bellows guide components were manufactured and assembled
- To show that the design would perform adequately, an extreme load test was performed

- The test required a significant tipping load be put onto the end of the bellows . . .

Maximum Loading Test

No problem - Just add a little weight to the end of the bellows . . .

Mystery Solved!!!

- The testing showed that the design could handle a very large number of steel plates without affecting the bellows performance and, therefore, the accumulator function

This design flew to Mars and is currently operating perfectly!
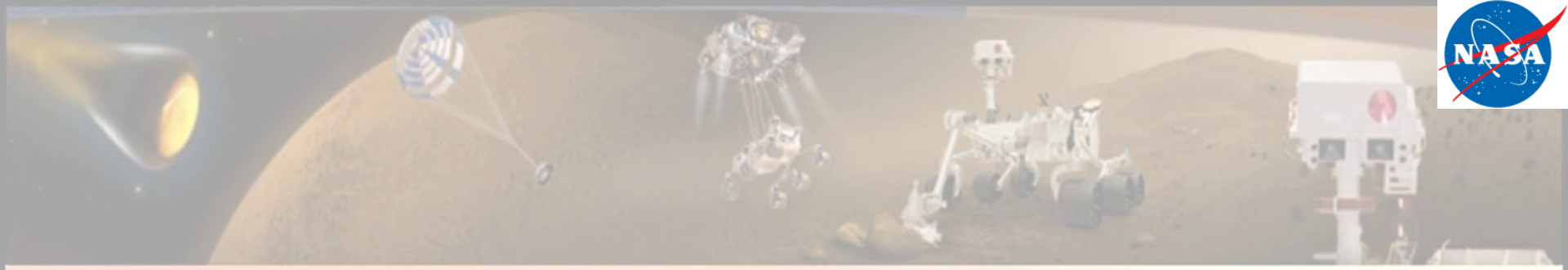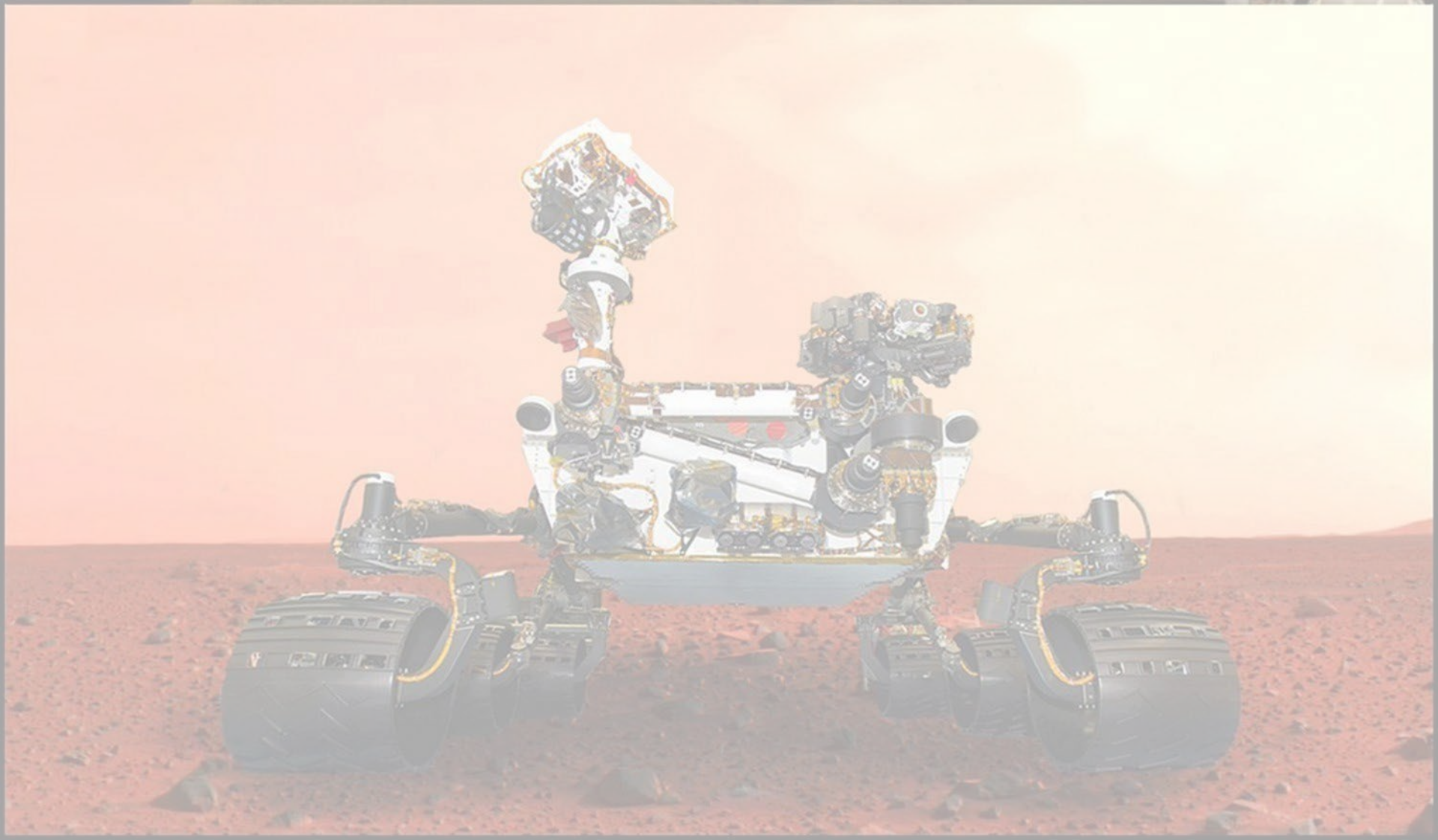
Reference herein to any specific commercial product, process, or service by trade name, trademark, manufacturer, or otherwise, does not constitute or imply its endorsements by the United States Government or the Jet Propulsion Laboratory, California Institute of Technology.