Notes on Delay-Tolerant Networking (DTN)

Scott Burleigh
Jet Propulsion Laboratory
California Institute of Technology

19 July 2016

This research was carried out at the Jet Propulsion Laboratory, California Institute of Technology, under a contract with the National Aeronautics and Space Administration. (c) 2016 California Institute of Technology. Government sponsorship acknowledged.

Outline

- Context
- Architectural principles
- Protocols
- Experiments
- Current deployment
- Future work

A Case Study

- Suppose you're packing for a quick business trip to Paris.
  - You don't know whether or not to bring your raincoat.
  - You have to leave for the airport in 10 minutes or you'll miss your flight.

Case 1

- Normal life in the 21st century.
  - You can use the Internet.
  - So you navigate to the http://weather.com website, select Paris, get the forecast, decide you won't need a raincoat, and hit the road.

Case 2

- A Denial Of Service attack against weather.com began 5 minutes ago and will take 30 minutes to resolve.
  - If you wait for the answer, you'll miss your plane.

Case 3

- You're in a submarine, using an acoustic modem, and the nearest Internet router is 300 km away.
  - The speed of sound in water is about 1.5 km/sec, so the one-way signal propagation time is 200 seconds.
  - You need to complete two round trips:
    - Connect to weather.com.
    - Request the Paris forecast.
  - So it will take 800 seconds to get the answer you need. If you wait for it, you'll miss your plane.

The Problem

- The Internet evolved from the telephone system, and its functional model is still telephony.
  - You (a client) connect to a source or destination of information (a server).
  - You engage in a conversation over this connection.
- When ***disruption*** or signal propagation ***latency*** retard connection establishment and conversational exchange, communication is degraded.
- The solution: *communication that is not degraded by delay*.
  - Asynchrony (message exchange) instead of synchrony (conversation).

Communication Structures

- Conversations are synchronous structures, like phone calls:
  - Both communicating entities are concurrently engaged.
  - Latency in the exchange of data between the entities is minimal and predictable.
- Message exchange is an asynchronous structure, like sending postcards:
  - The communicating entities <u>may or may not be</u> concurrently engaged; no constraint.
  - Latency in the exchange of data <u>may or may not be</u> minimal and predictable; no constraint.

The Robustness of Asynchrony

- You can always use conversational infrastructure for successful message exchange– e.g., you can take turns reading postcards aloud over the phone. But the reverse doesn't work.
- Message exchange is the general case: the conditions required for its success are a proper subset of the conditions required for the success of conversational communication.
- Since it's less demanding, it succeeds in a larger number of operational scenarios. It's more robust.

This Is Nothing New

- Humans have used both asynchronous and synchronous communication for thousands of years.

Conversational Model

- Conversational communication is “closed-loop”:
  - Say something.
  - Wait for the response.
  - Hear the response.
- This was the earliest communication: it began when humans acquired spoken and gestural language.
- It was only possible between people who were in the same place at the same time.
- But the bandwidth was very high.

Epistolary (Message Exchange) Model

- Epistolary communication is “open-loop”:
  - Write a message and have it carried to another person.
  - Do other things while the message is carried and delivered, and a response message is returned.
  - Receive the response message.
- This began at the start of civilization, when written language was invented.
- It made communication possible across thousands of miles or hundreds of years.
- But the bandwidth was low: originally, limited by walking speed.

A Dynamic Balance

- The balance between reliance on the conversational and reliance on the epistolary is always changing:
  - With geographical expansion, round-trip time (signal propagation latency) increases and the role of asynchronous communication increases.

    Empires were operated by courier and postal systems.
  - With improvements in technology, round-trip latency decreases and the role of asynchronous communication decreases.

    The telegraph made the Pony Express obsolete.

Communications Technology Timeline

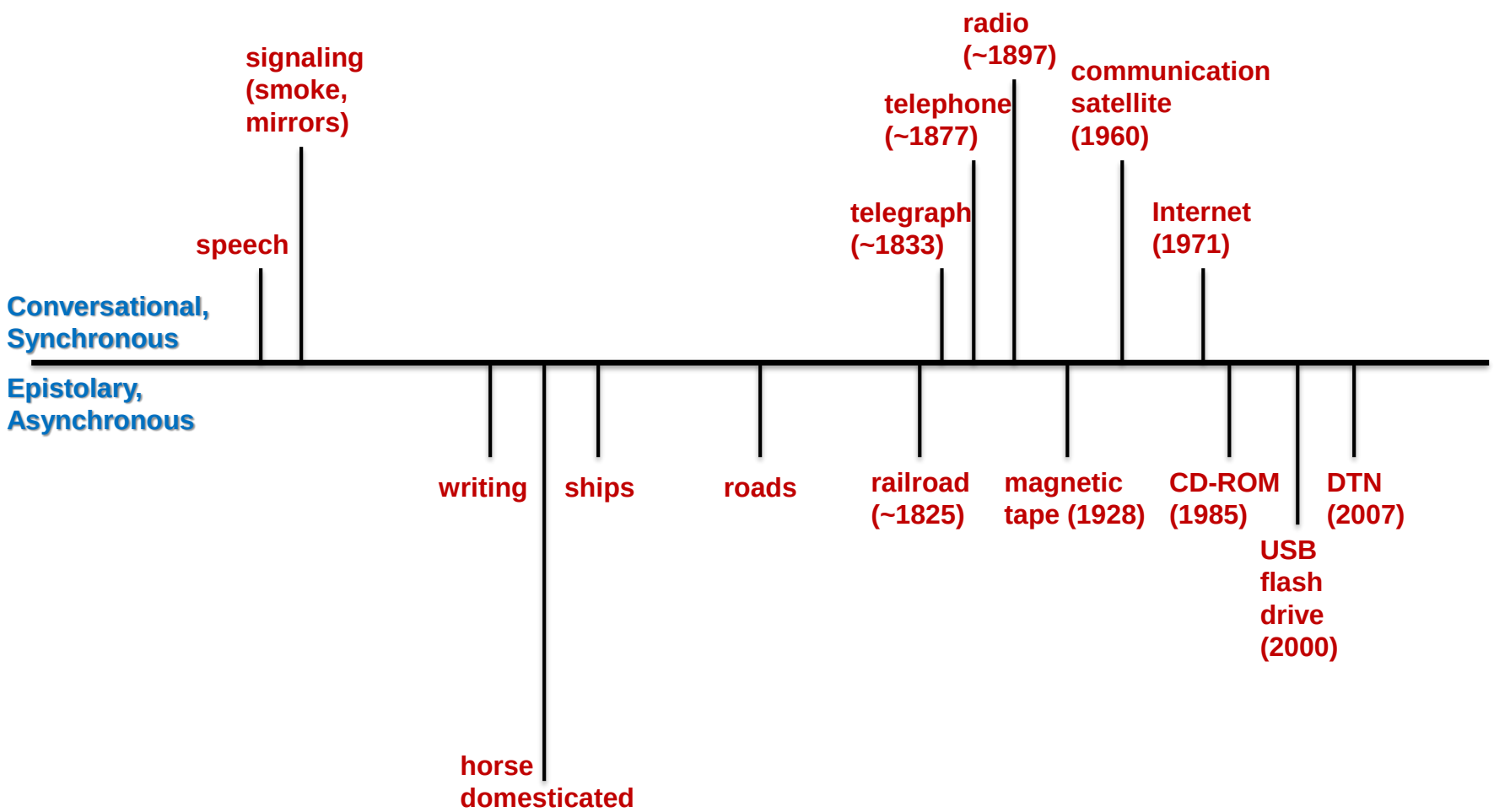

The Conversation Explosion

- Telegraphy: signaling by electricity.
- Telephony: audio telegraphy – speech by electricity.
- The design of Internet was inherited from telephony, though based on managing connections by packet switching instead of circuit switching.
- Many Web applications replace what you would otherwise do by telephone.

The Age of the Epistle

- But even in the era of the telephone we still rely on asynchronous communication – now more than ever:
  - Answering machines, voice mail.
  - Email.
  - Facebook.
  - Twitter.
- And as we expand into the solar system, the historical pattern re-emerges: with this immense geographical expansion, round-trip times again increase and we need DTN.

DTN Architectural Principles

- Minimize data exchanges. “Push” instead of “query”. Publish/subscribe instead of client/server. ***Anticipate***:
  - Ask now for the information you think you will need in the future.
  - Send new information immediately to everyone who has asked for it.
  - “Bundle” parameters with requests, metadata with data.
- Time is fundamental. “Time to live” in minutes, not hops.
- Detect and correct data loss inside the network, not just end-to-end. Persistent buffers, long acknowledgment loops.
- Protect data inside the network (both in transit and at rest), not just end-to-end.
- Applications must be as delay-tolerant as the network.

DTN Stack Elements

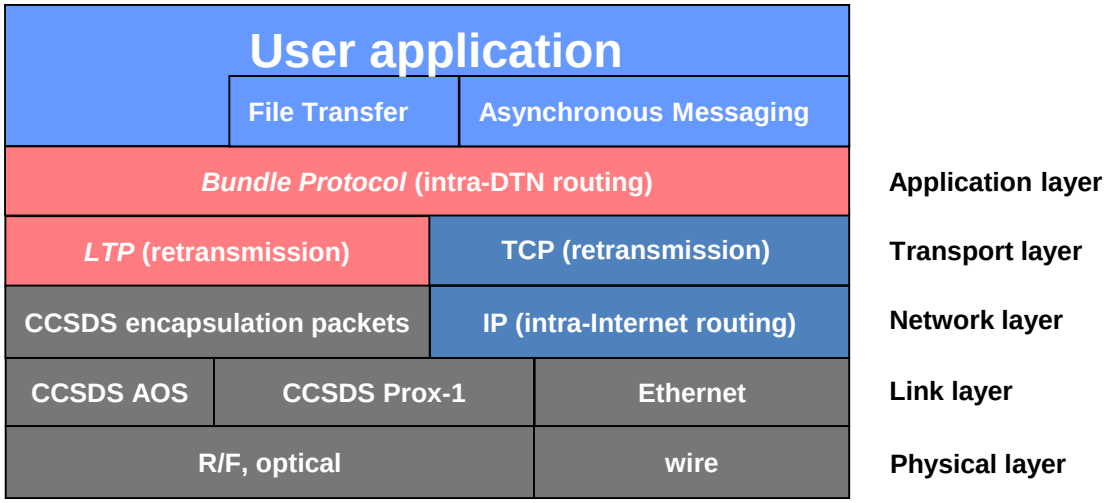

BP over Space Links and IP

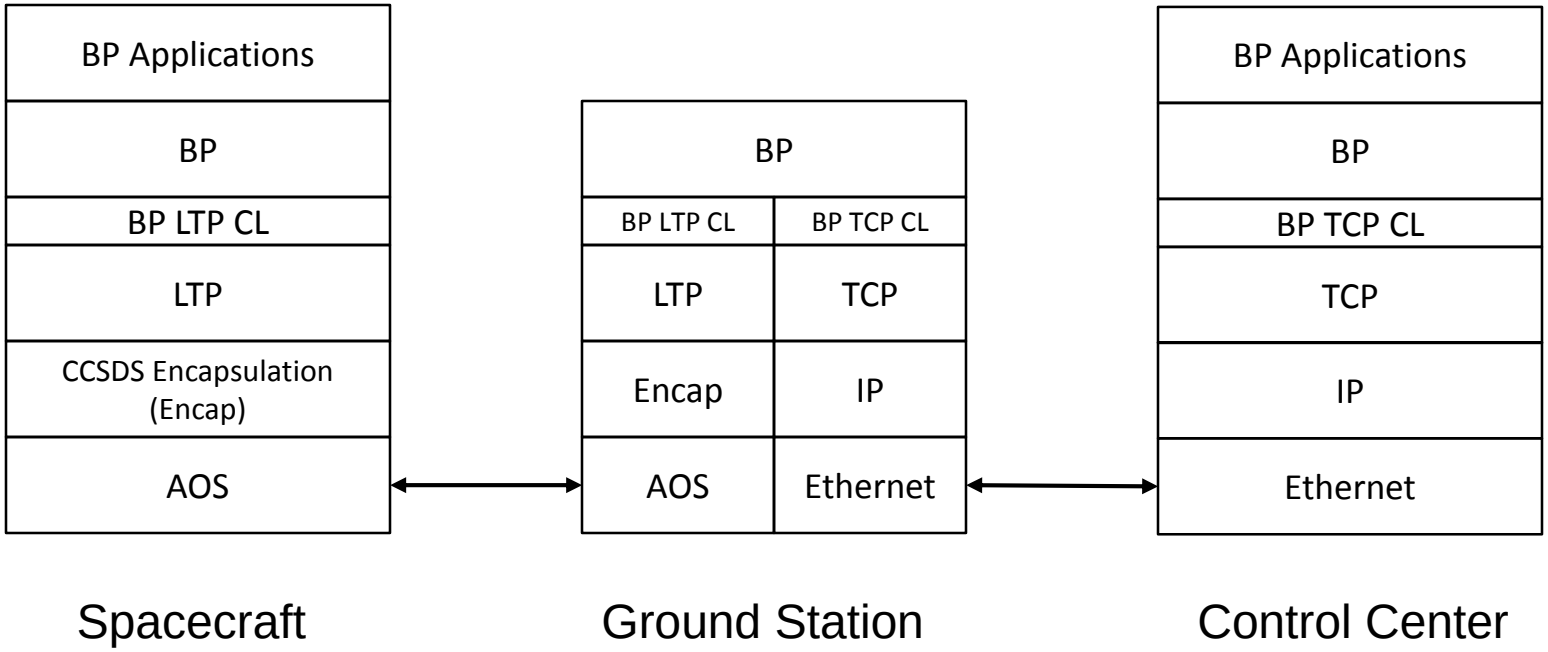

Other DTN Protocols

- bpsec (formerly Bundle Security Protocol): BP extension that provides encryption and integrity checking.
- BSS and BSSP (Bundle Streaming Service): adaptations for streaming media (mainly video) over delay-prone networks.
- DTPC (Delay-Tolerant Payload Conditioning): various end-to-end services, such as in-order delivery and end-to-end ack.
- AMP (Asynchronous Management Protocol): analogous to SNMP but delay-tolerant.
- DTKA (Delay-Tolerant Key Administration): public key infrastructure for DTN.
- BPTAP: enables Internet to run over DTN.

Experiments: DINET

- In 2008, “ION” (Interplanetary Overlay Network), JPL’s implementation DTN, was operated on the backup flight computer of the EPOXI (formerly Deep Impact) spacecraft from 18 October to 13 November.
  - EPOXI was in inactive cruise period while en route to encounter comet Hartley 2.
  - Spacecraft acted as a DTN router in an 11-node network. 8 Deep Space Network tracking passes of 4 hours each, separated by intervals of 2 to 5 days. Transmission to spacecraft at 250 bytes/second. Transmission from spacecraft at either 110 or 20000 bytes/second.
  - One-way signal propagation delay was initially 81 seconds, dropped to 49 seconds by the end of the four-week exercise. (EPOXI was approaching an Earth fly-by in December.)
- Moved 292 images (about 14.5 MB) through the network.
- All high-priority images were successfully delivered. No data loss. No data corruption anywhere in the network.

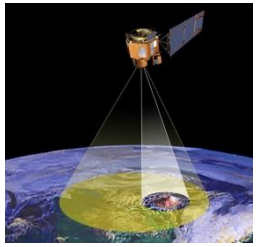

Experiments: Laser Communications

- In October of 2013, tested DTN across optical links as part of the Lunar Laser Communication Demonstration (LLCD) on the Lunar Atmosphere and Dust Environment Explorer (LADEE) spacecraft.

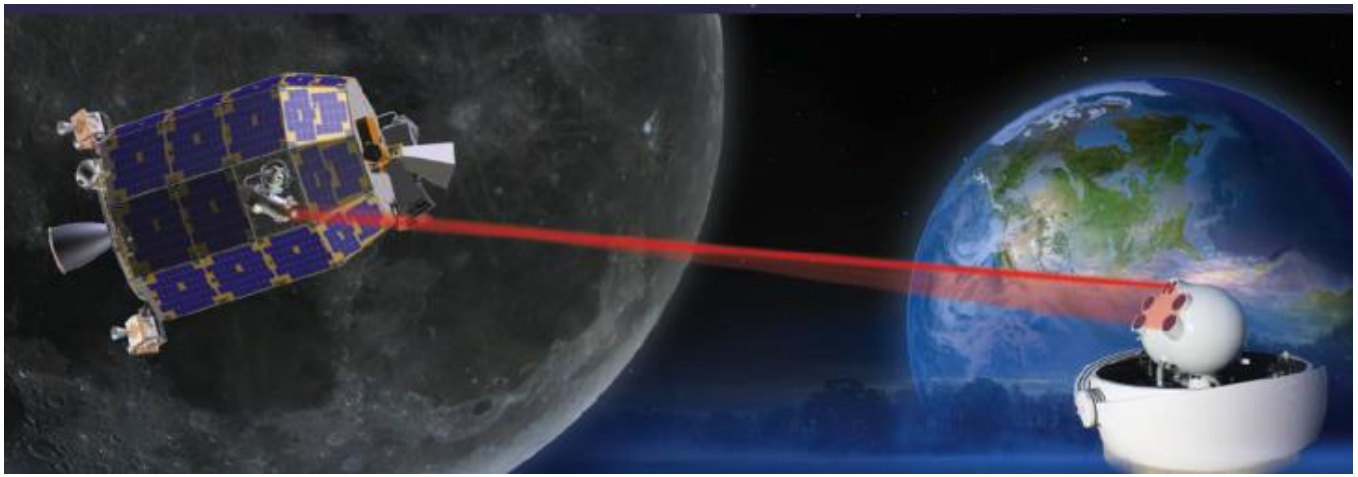

Experiments: METERON

- From 2012 to date, the Multipurpose End-To-End Robotics Operations Network, METERON, has been preparing the world's space agencies for future robotic exploration missions.
  - Led by the European Space Agency, ESA, and supported by NASA and other space agencies.
  - First METERON experiment OPSCOM-1, evaluating DTN for Telerobotic operations, was successfully executed by ESA on 23 October 2012. Additional experiments were conducted in 2013 and 2015.

Current Deployment: ISS

June 21, 2016

New Solar System Internet Technology Debuts on the International Space Station

This month, NASA took a major step toward creating a Solar System Internet by establishing operational Delay/Disruption Tolerant Networking (DTN) service on the International Space Station. The DTN service will help automate and improve data availability for space station experimenters and will result in more efficient bandwidth utilization and more data return.

DTN works by providing a reliable and automatic "store and forward" data network that stores partial bundles of data in nodes along a communication path until the parts can be forwarded or retransmitted, then re-bundled at the final destination – either to ground stations on Earth, robotic spacecraft in deep space, or, one day, humans living on other planets. This differs from traditional Internet Protocols that require all nodes in the transmission path to be available during the same time frame for successful data transmission.

Aboard the space station, DTN was added to the Telescience Resource Kit (TReK), a software suite for researchers to transmit and receive data between operations centers and their payloads aboard station. This service on the station will also enhance mission support applications, including operational file transfers.

This first use of the service as an operational capability on a space mission marks the beginning of the space station as a node in the evolving Solar System Internet. In addition to use in space, DTN can benefit environments where communications are unreliable, such as disaster response areas.

Future Work

- Science experiment "payloads" on ISS will use DTN for communication with home institutions on Earth.
  - Nine (9) payloads have either committed or expressed interest so far.
- ION integrated into the Core Flight Software system for future NASA Advanced Exploration Systems missions.
  - In the near term, several possible "Cubesat" satellite missions.
- DTN evaluation and test program in progress with KARI (Korean national space agency).
- Permanent deployment of terrestrial DTN system proposed to Ministry of Agriculture following successful N4C (Networking for Communications Challenged Communities) tests.

Thanks!
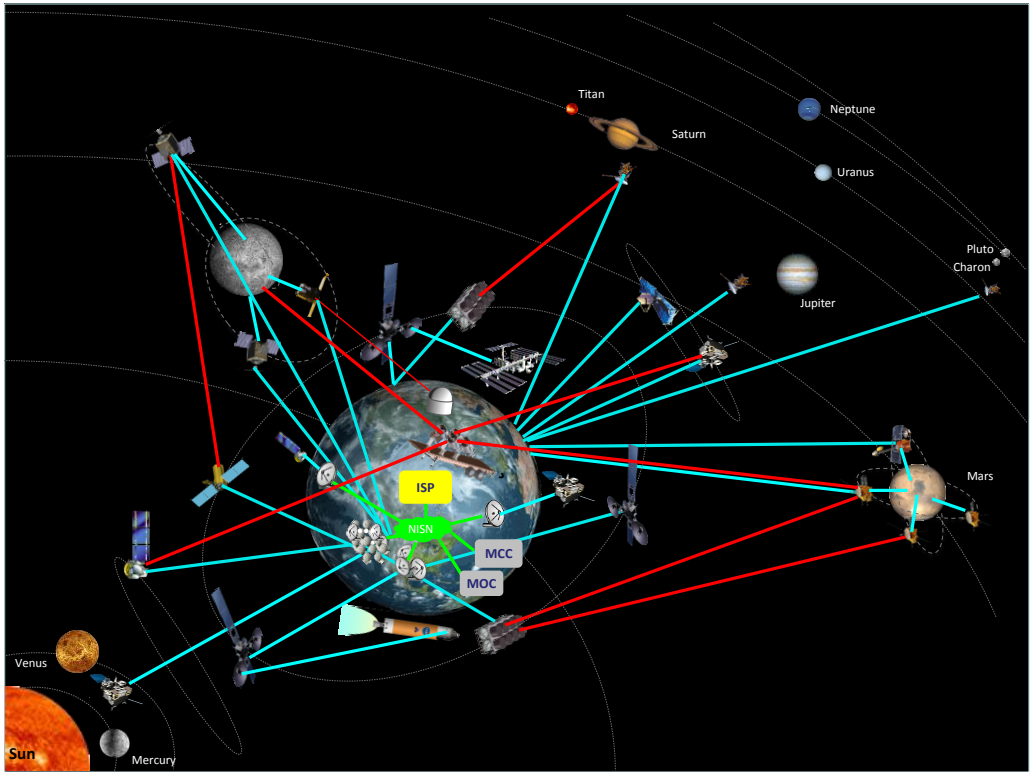
Questions?