Jet Propulsion Laboratory
California Institute of Technology

Co-op Final Presentation

David Coven
Mechanical Engineering Co-op, Northeastern University
Planetary Sample Acquisition and Handling Group
January-June 2016

Projects

- Testbed Operations
- Post-Testing
- Testbed Protective Shield
- Cabling Mockup
- Sample Tube Gripper Redesign
- Instrument Isolator Assembly

Testbed Operations

January-June 2016

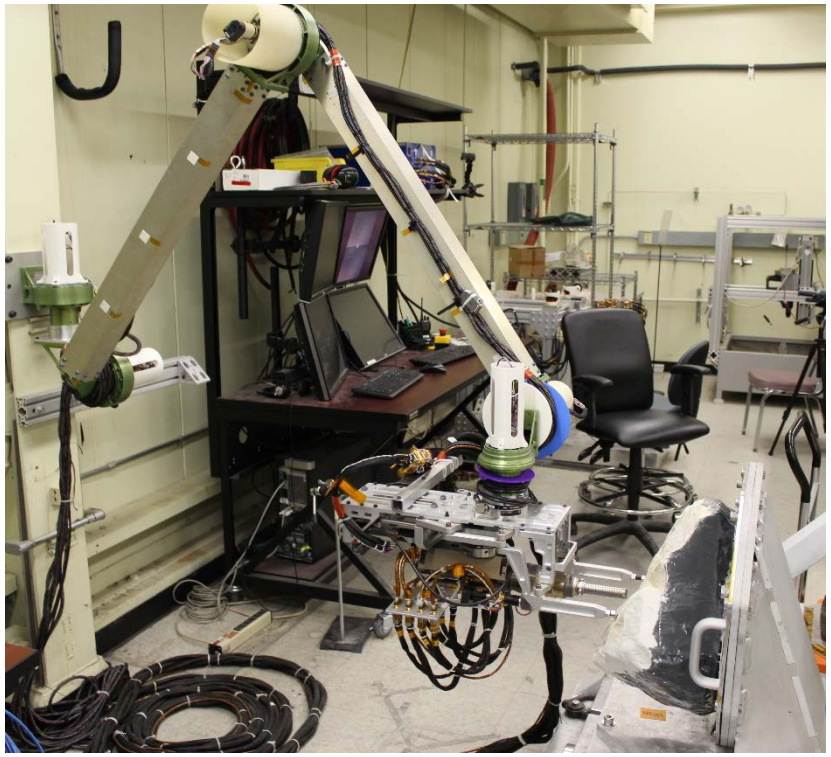

ARC

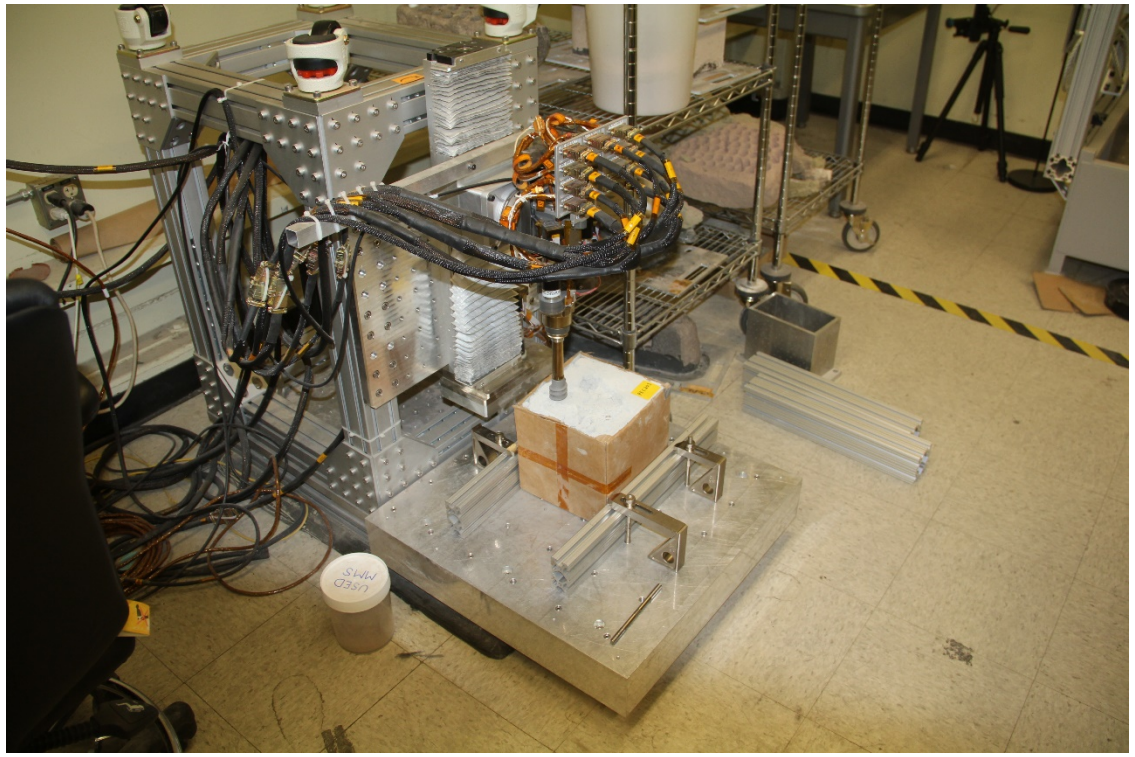

PEC

- Percussion Efficacy and Communition (PEC)
  - Uses prototype rock coring drill, displayed at Explore JPL in June 2016
  - Ran tests in Mars simulant, in various types of rock, and ran abrading tests with a special bit
- Ambient Robotic Coring (ARC)
  - Tests drill performance with added compliance of a robotic arm

Post-Test Engineer

January-June 2016

- Used test stand to measure force when inserting/extracting sample tubes
- Documented damage/wear on hardware
- Revised procedures to improve consistency
- Wrote guide on Access queries for test database
- Identified and corrected missing or erroneous values from tests and post-tests

Photo Documentation of Bit and Tube

Test Stand

Testbed Protective Shield

February-March 2016

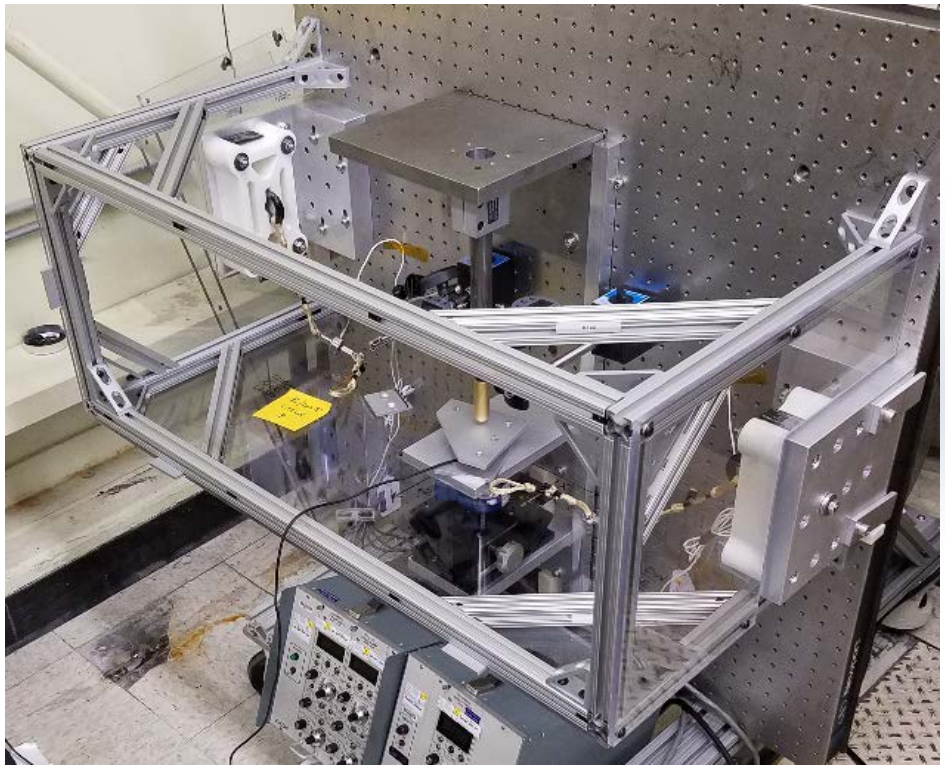

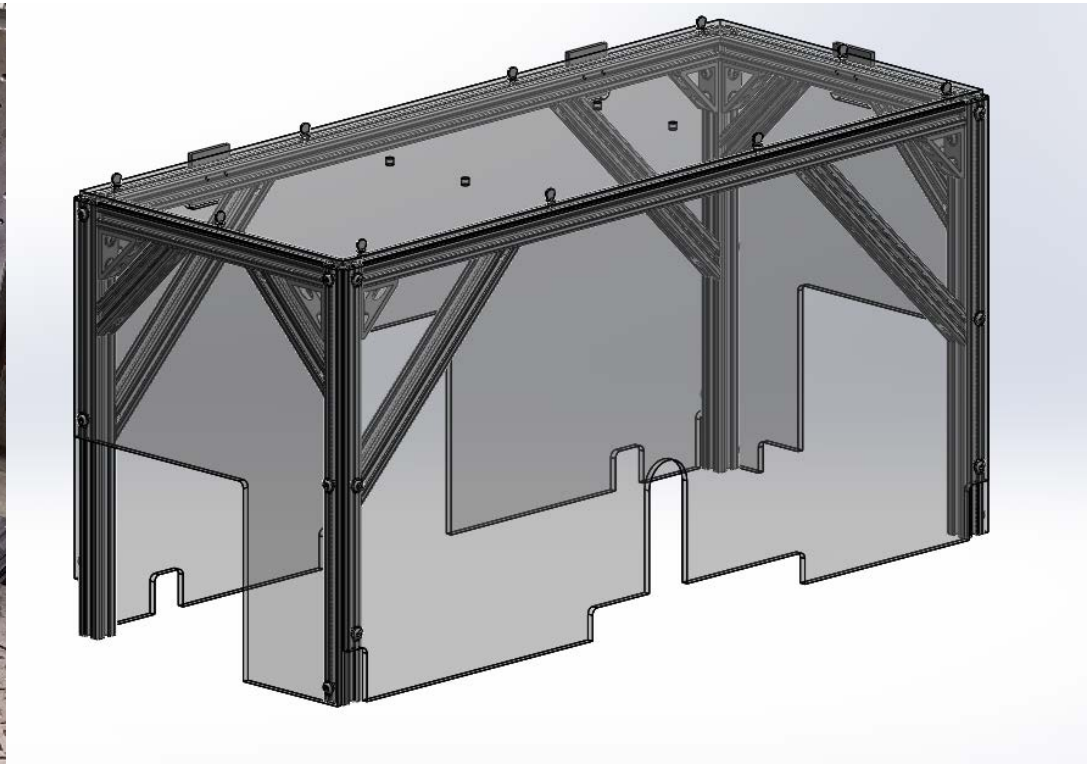

- Designed to fit over hardware on optical table
- Protects testbed operator from flying debris
- Easily removable panels

Cabling Mockup

February-June 2016

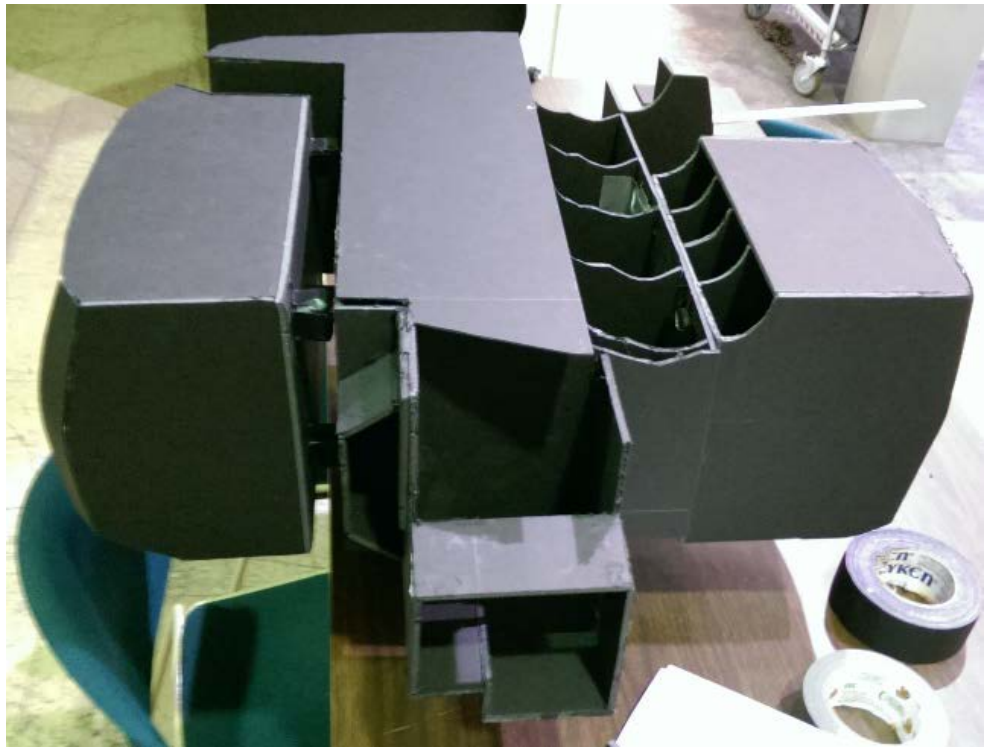

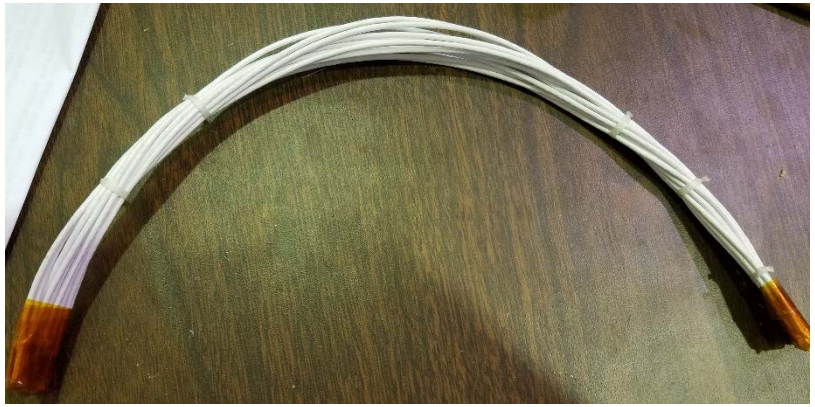

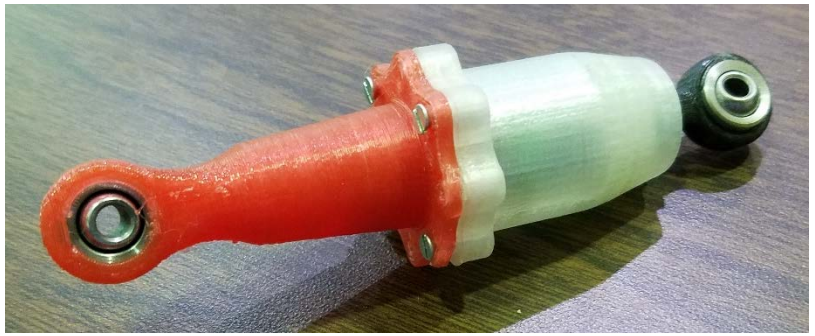

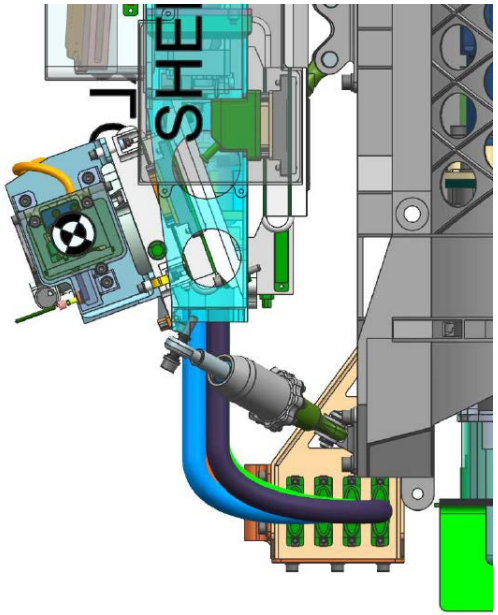

- Mockup of Mars 2020 Turret for early cable routing testing
- Specced out mockup cable bundles (contents, shielding, overwrap) for fabrication

Sample Tube Gripper Redesign

February-June 2016

- Handheld sample tube grippers were breaking down and needed replacement
- Made of Al 6061, wear was causing jams after extended use
  - Ball retention feature was two pieces screwed together; threads stripped and rendered grippers unusable
- Cam feature on ball pusher was too deep, causing jams
- Gripper did not tightly fit sample tube; spring loaded setup would send tubes flying if not carefully handled
  - Dimensions of ball-lock did not align properly with the tube

Sample Tube Gripper Redesign

Hardware

Test Piece for Ball Retention

Prototype Assembled and Disassembled

Sample Tube Gripper Redesign

Design Evolution

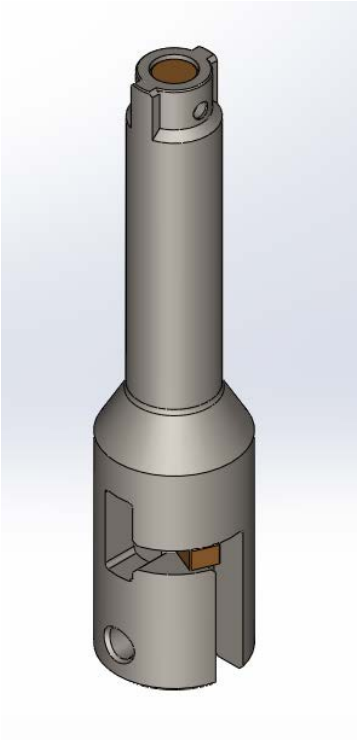

Design 1:
Tang Lock

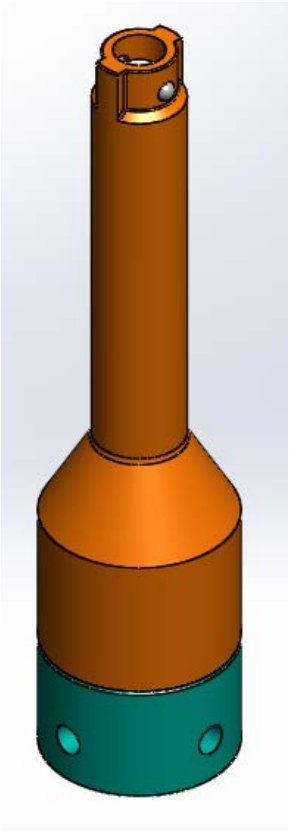

Design 2:
Threaded Cap

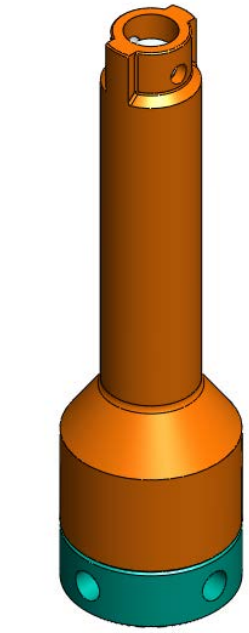

Design 3:
Compact
Threaded Cap

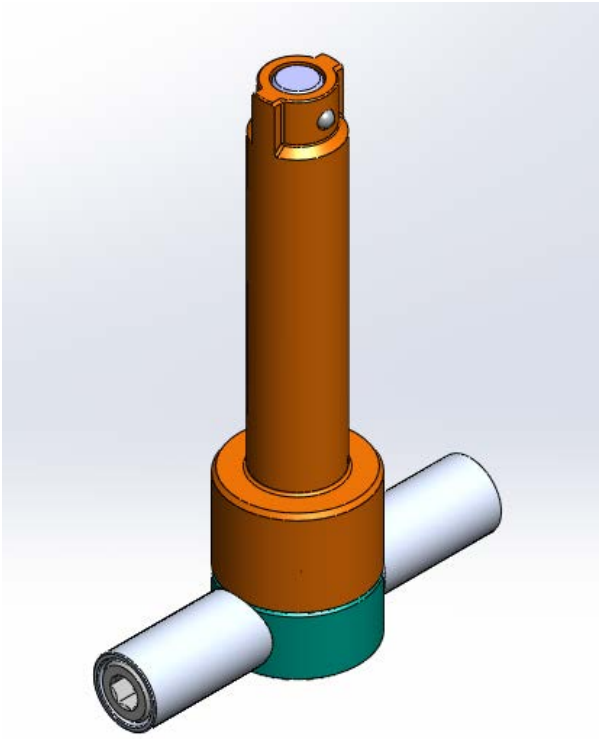

Final Design:
Reduced Diameter

Sample Tube Gripper Redesign

Features

- Durability
  - 316 stainless steel used in place of aluminum to reduce wear
- Ease of manufacture
  - Can be turned out on-lab or via an offsite manufacturer
- Ease of assembly
  - No hand tools required to swap out ball pusher/spring/balls
  - No small threads that could be stripped
  - Swaged ball retention feature reduces machining complexity
- Improved fit
  - Reduced chances of tube detaching from gripper

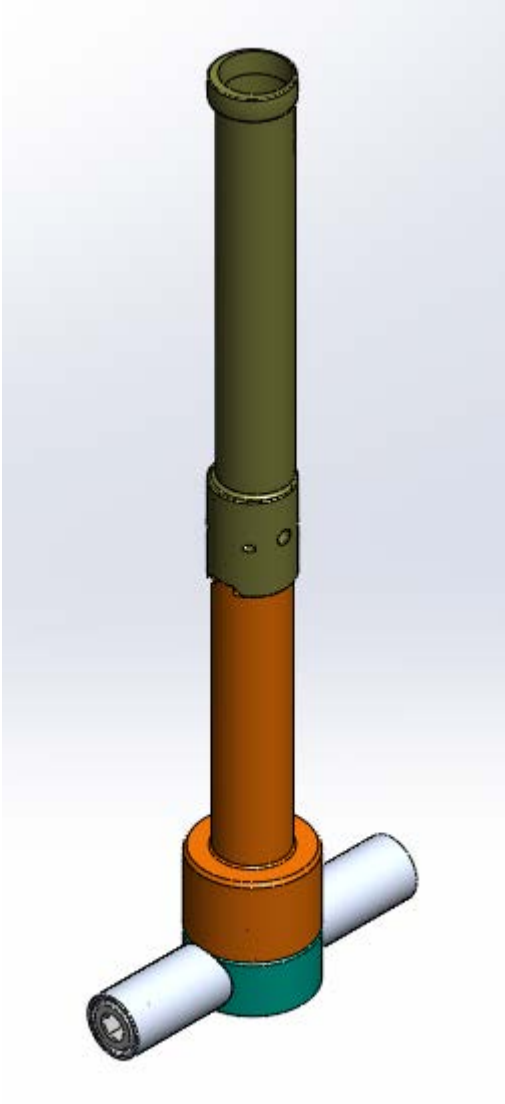

Interface with Sample Tube

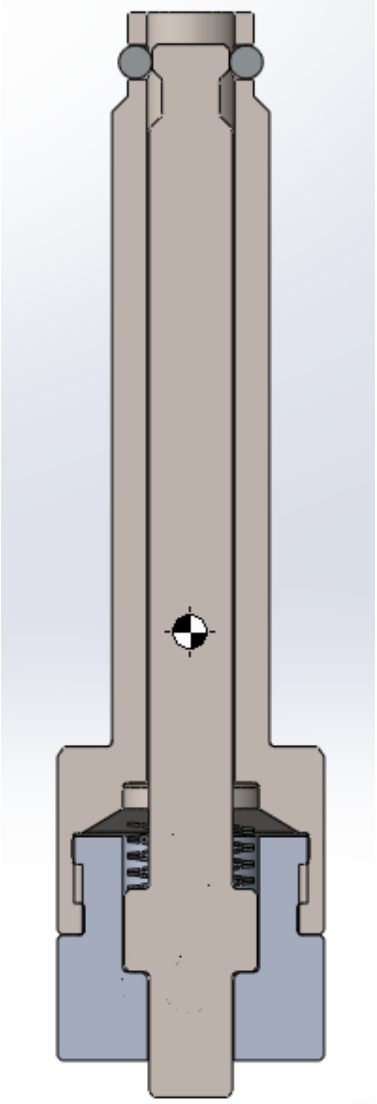

Cross-Section

Instrument Isolator Assembly

May-June 2016

- Helped assemble prototype isolator canisters
- Tested springs to ensure they deflected enough
- Troubleshot design changes for modified dimensions

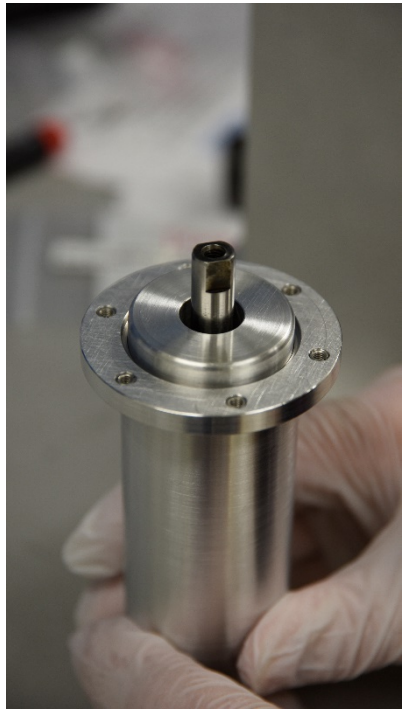

Jet Propulsion Laboratory
California Institute of Technology

jpl.nasa.gov

© 2016 California Institute of Technology. Government sponsorship acknowledged.