Welcome

AEROSPACE
Assuring Space Mission Success

© The Aerospace Corporation 2016

Test Anomaly & Stability Investigation of Curiosity Rover's Horizontal Swing Arm

Long Y. Chen and Jason E. Lee

Jet Propulsion Laboratory, California Institute of Technology
Pasadena, California

Mechanical Systems Engineering
June 21–23, 2016

Copyright 2016 California Institute of Technology. U.S. Government sponsorship acknowledged. Reference herein to any specific commercial product, process, or service by trade name, trademark, manufacturer, or otherwise, does not constitute or imply its endorsement by the United States Government or the Jet Propulsion Laboratory, California Institute of Technology.

AEROSPACE
Assuring Space Mission Success

© The Aerospace Corporation 2016

Mars Science Laboratory Rover Mobility Deployment

- Mars Science Laboratory (MSL) is a space mission to carry the Curiosity rover to Mars to study its climate and geology
- Curiosity rover mobility uses a rocker-bogie type of suspension connected at each side of the vehicle through an articulated differential system on the rover chassis
- The mobility is deployed by free fall in the Sky Crane phase of the Entry-Descent-Landing sequence

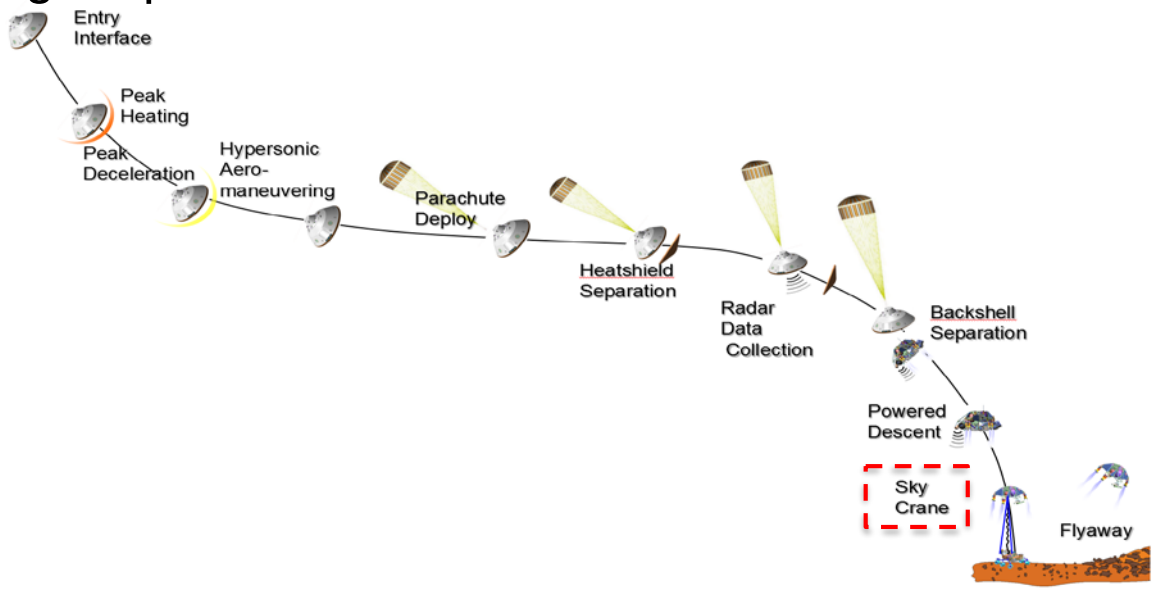

Copyright 2016 California Institute of Technology. U.S. Government sponsorship acknowledged. Reference herein to any specific commercial product, process, or service by trade name, trademark, manufacturer, or otherwise, does not constitute or imply its endorsement by the United States Government or the Jet Propulsion Laboratory, California Institute of Technology.

AEROSPACE

Mobility Development During Sky Crane Maneuver

Power Descent Vehicle with Stowed Rover

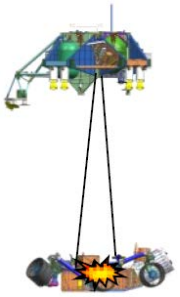

Fwd Rocker Release

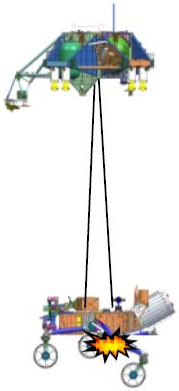

Bogie Release

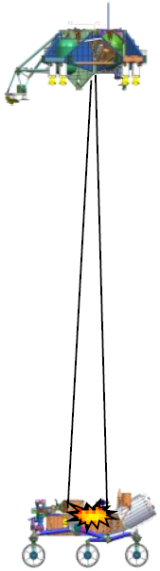

Touchdown/ Bridle Release

Descent Stage Fly Away

Stowed Rover

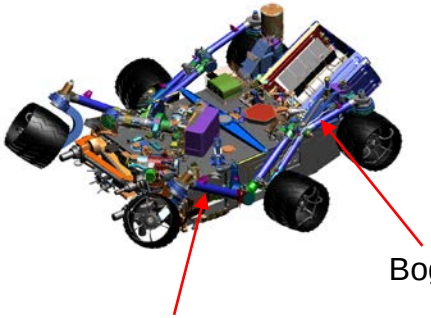

Deployed Rover

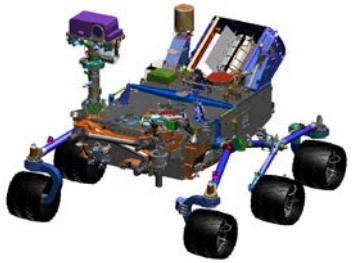

Copyright 2016 California Institute of Technology. U.S. Government sponsorship acknowledged. Reference herein to any specific commercial product, process, or service by trade name, trademark, manufacturer, or otherwise, does not constitute or imply its endorsement by the United States Government or the Jet Propulsion Laboratory, California Institute of Technology.

AEROSPACE

Mobility Deployment Load on Horizontal Swing Arm

- Mobility deployment during the Sky Crane operation produces a significant amount of load on the Horizontal Swing Arm (HSA)
- A strength/stability test was performed at JPL to structurally qualify the mobility differential assembly and the associated interfaces with the rover chassis
- This test produced the maximum in-plane moment in the HSA and the maximum rover CS X-direction force at the Center Differential Pivot (CDP)

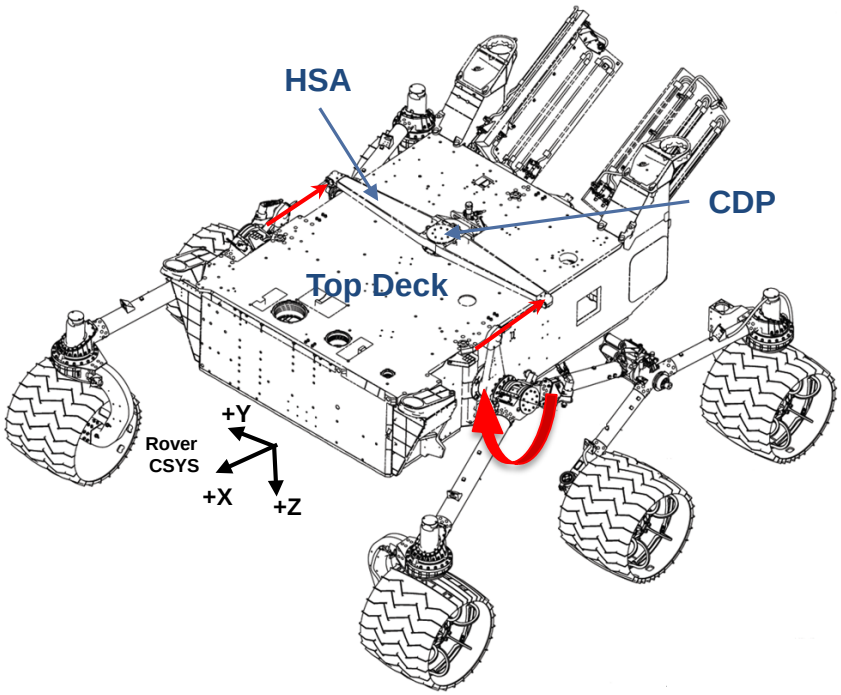

Copyright 2016 California Institute of Technology. U.S. Government sponsorship acknowledged. Reference herein to any specific commercial product, process, or service by trade name, trademark, manufacturer, or otherwise, does not constitute or imply its endorsement by the United States Government or the Jet Propulsion Laboratory, California Institute of Technology.

AEROSPACE

Strength/Stability Test Setup for Mobility Deployment

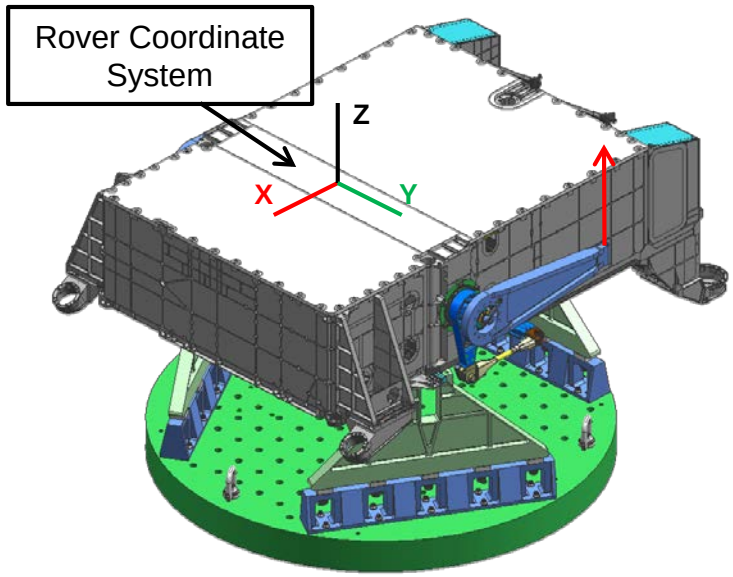

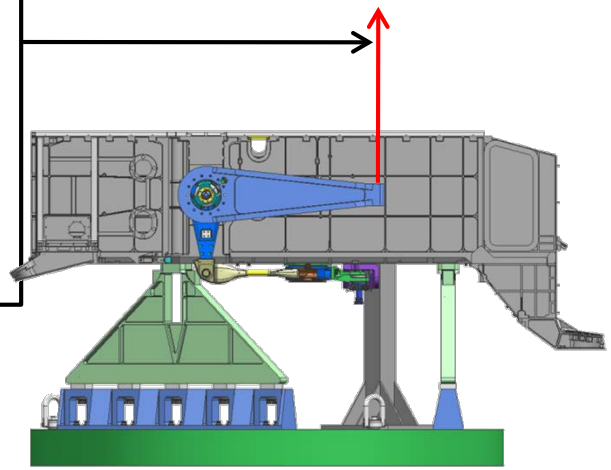

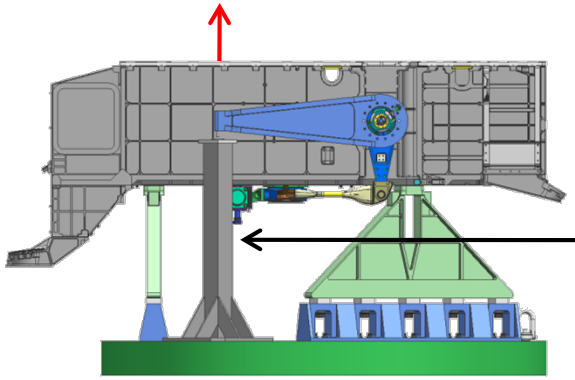

Support Supplied to PORT (Rover –Y) Side Pull Arm to Restrain Articulation of Differential Assembly*

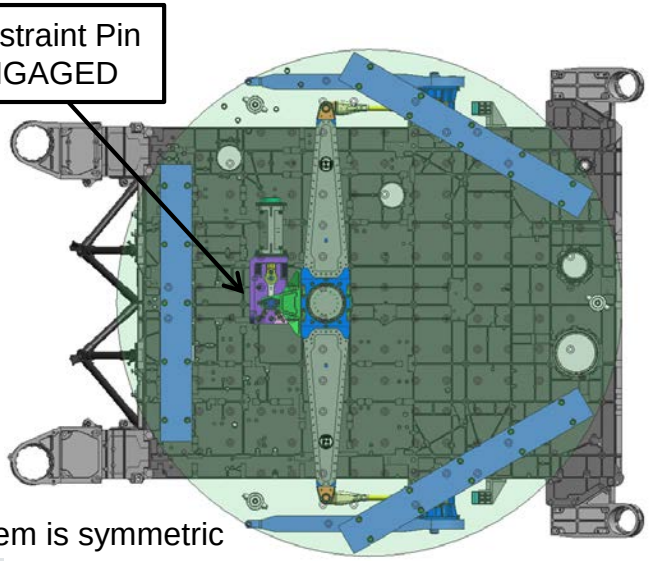

* Loading at +Y and -Y sides are interchangeable since the mobility system is symmetric

Copyright 2016 California Institute of Technology. U.S. Government sponsorship acknowledged. Reference herein to any specific commercial product, process, or service by trade name, trademark, manufacturer, or otherwise, does not constitute or imply its endorsement by the United States Government or the Jet Propulsion Laboratory, California Institute of Technology.

AEROSPACE

HSA Test Load and Some Strain Gauge Locations

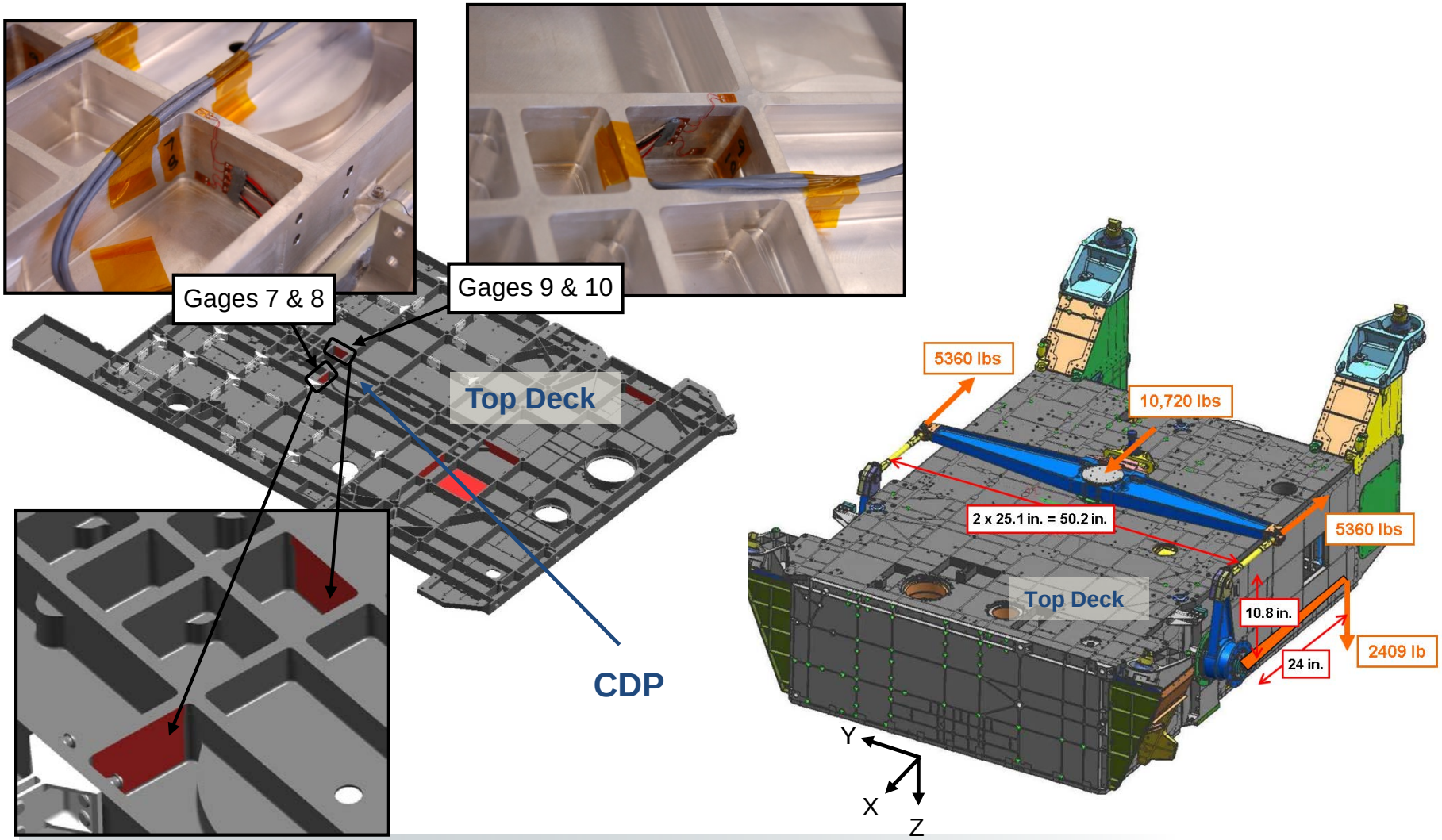

Copyright 2016 California Institute of Technology. U.S. Government sponsorship acknowledged. Reference herein to any specific commercial product, process, or service by trade name, trademark, manufacturer, or otherwise, does not constitute or imply its endorsement by the United States Government or the Jet Propulsion Laboratory, California Institute of Technology.

AEROSPACE

HSA Test Displacement and Strain Gages Anomaly

- Due to an outdated internal bookkeeping, the analyst sized the HSA with an older and much lower load
- Updated full test load = (1.2 x FLL) = 2409 lbs
- Displacement and strain nonlinearity observed at ~55% or 1325 lbf
- Test Conductors (Long Chen & John Bignell) ordered the test to stop at 60% or 1445 lbs
- The test was repeated with a high speed video recording and the same nonlinearity was observed again

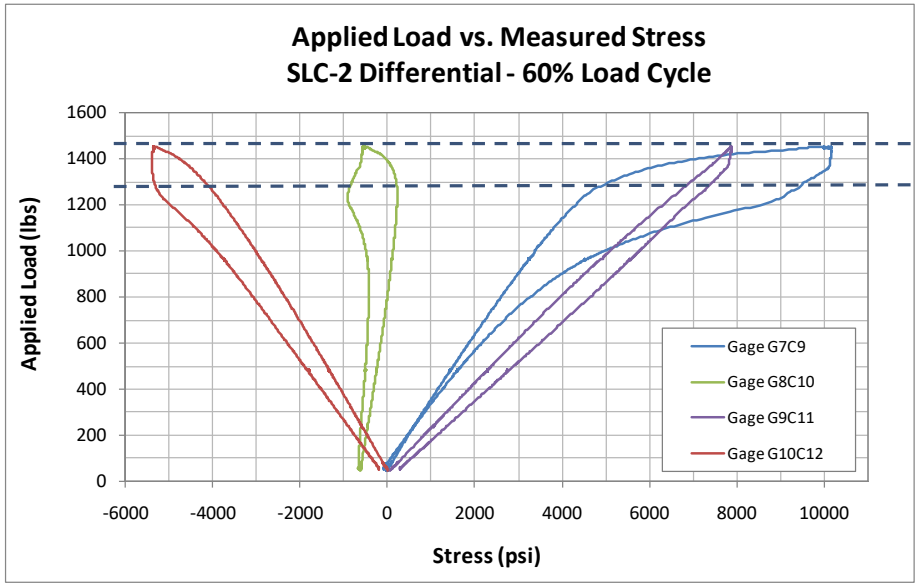

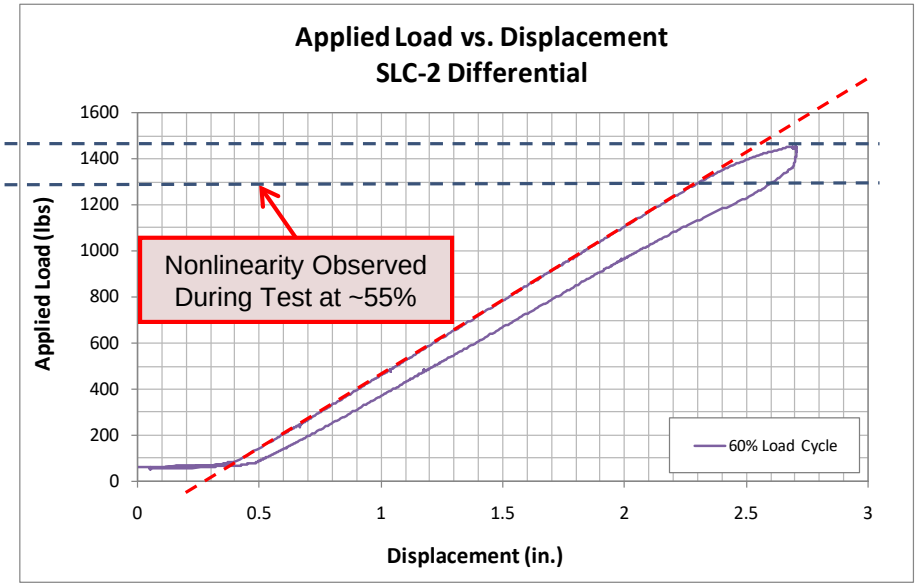

Copyright 2016 California Institute of Technology. U.S. Government sponsorship acknowledged. Reference herein to any specific commercial product, process, or service by trade name, trademark, manufacturer, or otherwise, does not constitute or imply its endorsement by the United States Government or the Jet Propulsion Laboratory, California Institute of Technology.

AEROSPACE

MSL – Horizontal Swing Arm – FEM Loads and Boundary Conditions

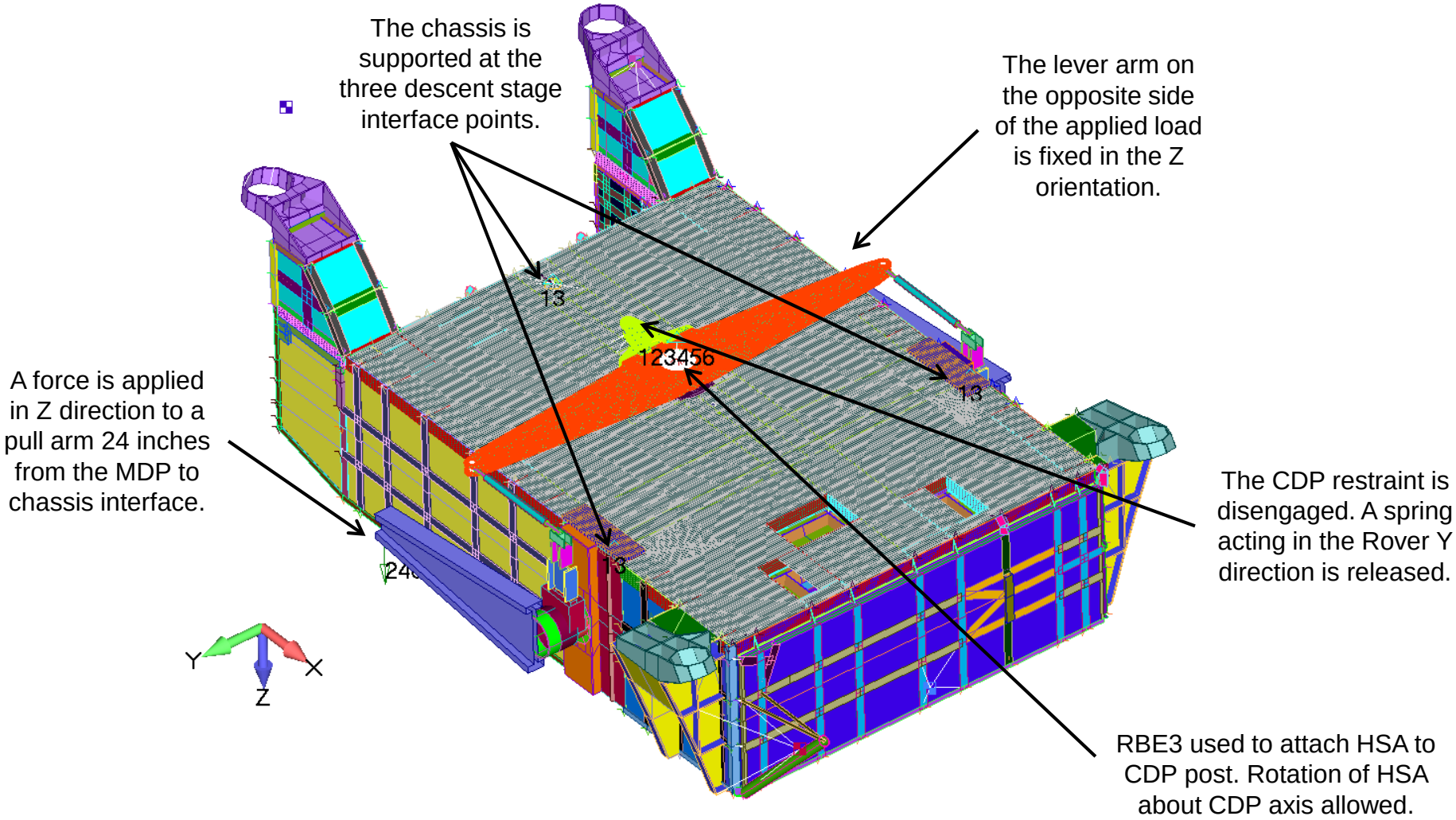

Copyright 2016 California Institute of Technology. U.S. Government sponsorship acknowledged. Reference herein to any specific commercial product, process, or service by trade name, trademark, manufacturer, or otherwise, does not constitute or imply its endorsement by the United States Government or the Jet Propulsion Laboratory, California Institute of Technology.

AEROSPACE

MSL – Original Horizontal Swing Arm Stability Analysis

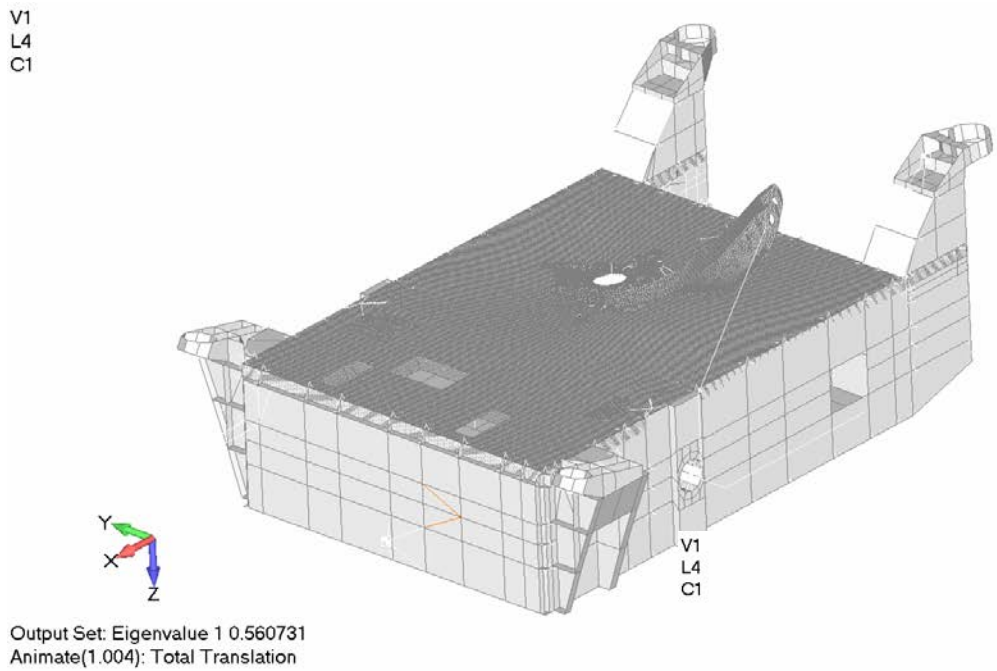

Linear Buckling Results (SOL105):

- Eigenvalue 1 = 0.561 (Swing Arm Mode).
- Applied Test Load = 2,409 lbf.
- HSA Buckling Load = 2,409 * 0.561 = 1,351 lbf (matches well with test).

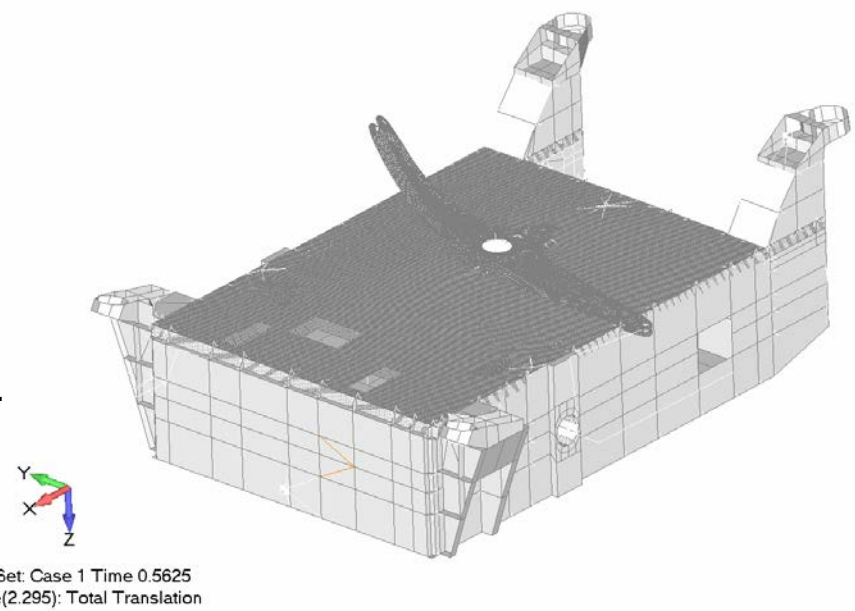

Geometric Nonlinear Static Results (SOL106):

- Applied Load to Nonlinear FEM = 2,409 lbf.
- Divergence occurred at 0.563 Time step = 1,355 lbf (matches well with test).
- Nonlinear buckling load (1355#) was close to linear buckling solution (1351#).

Copyright 2016 California Institute of Technology. U.S. Government sponsorship acknowledged. Reference herein to any specific commercial product, process, or service by trade name, trademark, manufacturer, or otherwise, does not constitute or imply its endorsement by the United States Government or the Jet Propulsion Laboratory, California Institute of Technology.

AEROSPACE

Comparison - Original and Redesigned HSA

- The original HSA was a tapered I-beam made of 7075-T7351

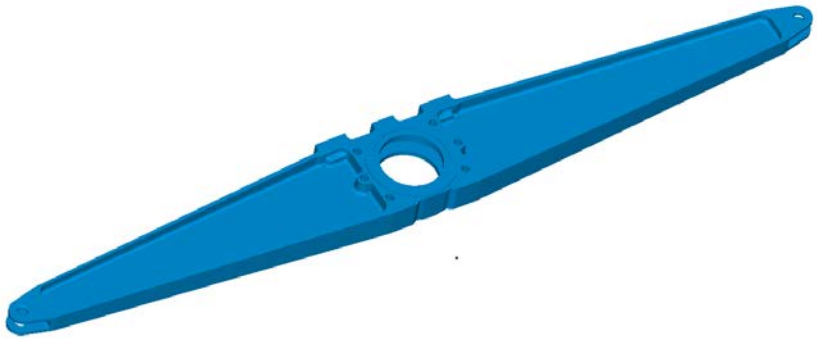

- The redesigned HSA became a tapered C-channel and covered with two 0.032” sheets to form a stiffer closed box beam

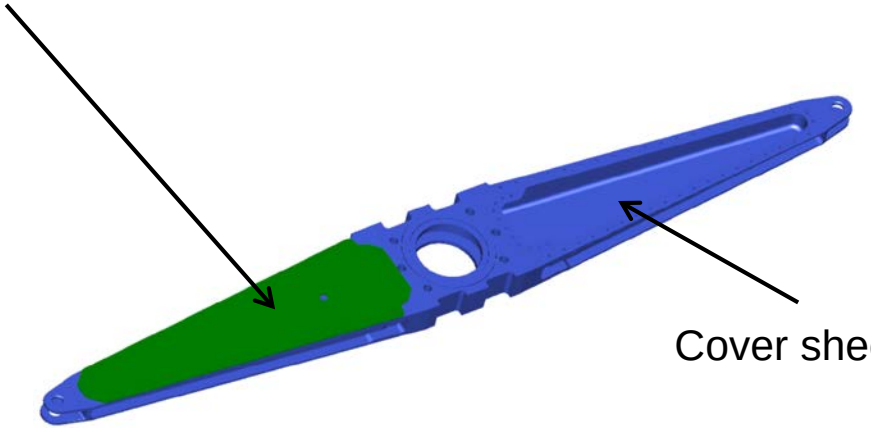

Cover sheet not shown for clarity

Copyright 2016 California Institute of Technology. U.S. Government sponsorship acknowledged. Reference herein to any specific commercial product, process, or service by trade name, trademark, manufacturer, or otherwise, does not constitute or imply its endorsement by the United States Government or the Jet Propulsion Laboratory, California Institute of Technology.

MSL – Redesigned Horizontal Swing Arm Design (+Z Applied Test Load)

+Z applied load is the test configuration which does not cause top deck to buckle in compression prior to HSA buckling

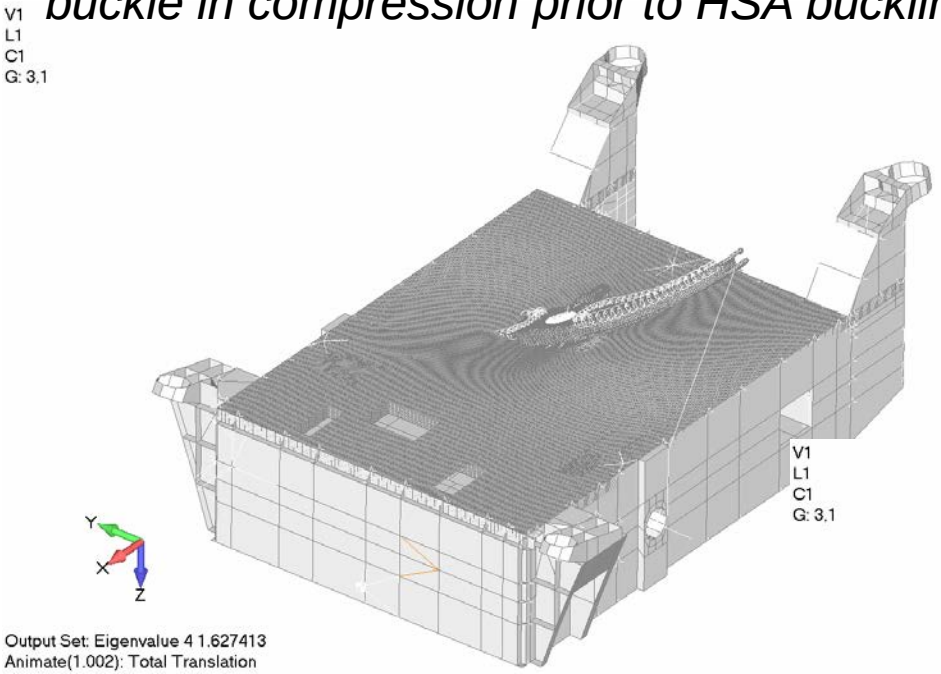

Linear Buckling Results (SOL105):

- Applied Test Load = 2,277 lbf (updated load).
- Eigenvalue No. 4 = 1.63 (Swing Arm Mode)
- HSA Buckling load = 2,277 lbf * 1.63 = 3711 lbf.
- Top Deck panel local buckling modes observed for eigenvalues No's 1 - 3. Magnitudes are **negative** and so panels are in **tension** and not buckling.

Geometric Nonlinear Static Results (SOL106):

- Applied Load to Nonlinear FEM = 3,900 lbf.
- Divergence occurred at 0.872 Time step (3,400 lbf).
- No buckling occurs in Top Deck prior to buckling of the Horizontal Swing arm.
- Nonlinear buckling load (3400#) was 8% less than linear buckling solution (3711#) due to the larger nonlinear effect.

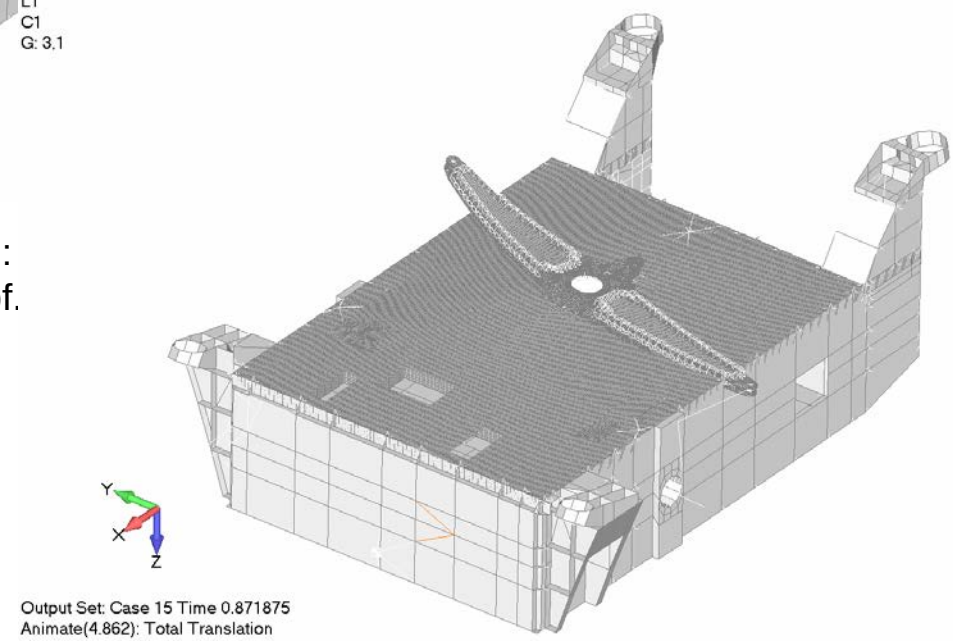

Copyright 2016 California Institute of Technology. U.S. Government sponsorship acknowledged. Reference herein to any specific commercial product, process, or service by trade name, trademark, manufacturer, or otherwise, does not constitute or imply its endorsement by the United States Government or the Jet Propulsion Laboratory, California Institute of Technology.

AEROSPACE

Redesigned HSA Test Results : 2277 lbf Applied Load

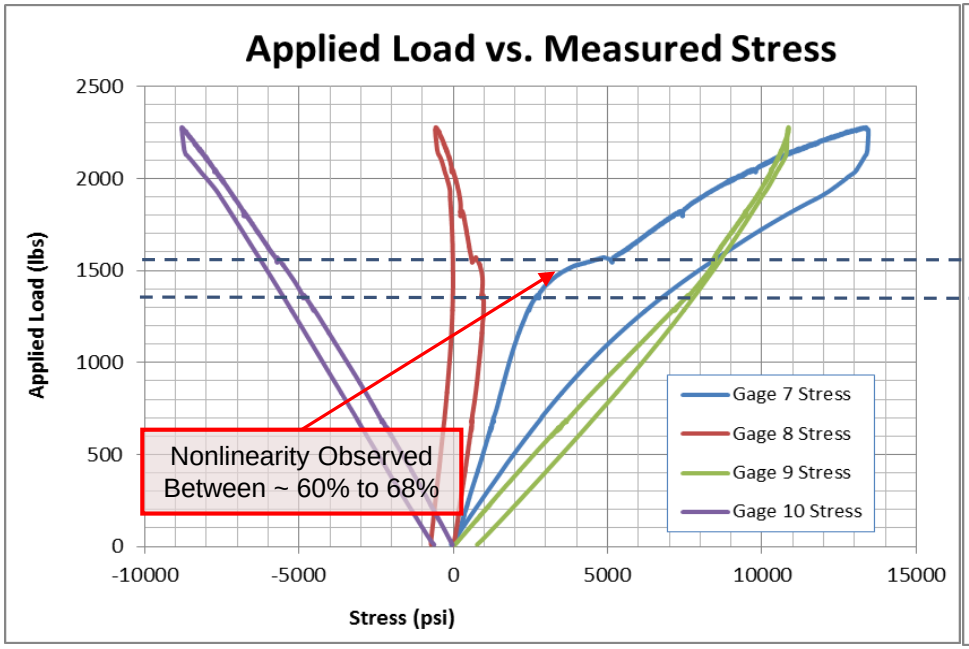

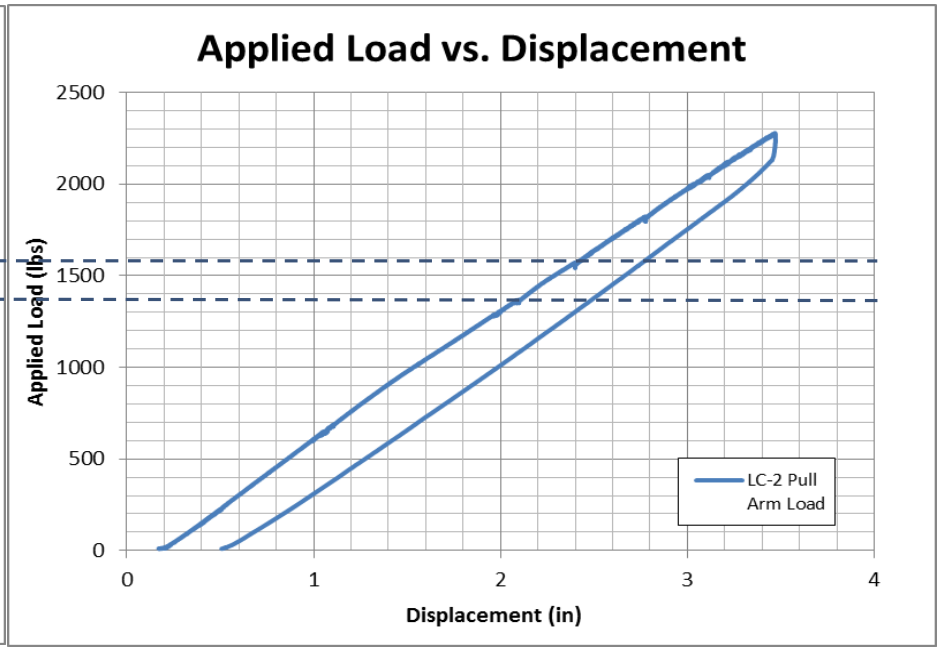

Copyright 2016 California Institute of Technology. U.S. Government sponsorship acknowledged. Reference herein to any specific commercial product, process, or service by trade name, trademark, manufacturer, or otherwise, does not constitute or imply its endorsement by the United States Government or the Jet Propulsion Laboratory, California Institute of Technology.

AEROSPACE

Possible Causes of The Momentary Nonlinearity

- Local load path change when certain top deck panels experience compression buckling by design (no panel buckling for this test)
- Top deck internal joints slip
- Mechanical plays in the differential mechanism
- CDP post to top deck joint slip → This is the most likely scenario
  - Ten Inconel MJ5 cap screws were used to fasten CDP post to rover top deck, each with 2613 lbf preload
  - Each screw joint allows 1 to 2 mils small clearance
  - Total preload between CDP post and top deck = 2613x10=26130 lbf.
  - The momentary nonlinearity was observed between 60% and 68% of the target load, equating to 6071 to 6880 lbf CDP shear load.
  - Shear loads in the nonlinear range correspond to a range of coefficient of friction between 0.23 and 0.26 which is a reasonable range for actual hardware.
  - Strain gage readings still showed minor non-linear effect and pickup more strains after slip. The differential system is nonlinear due to the moving mechanism.

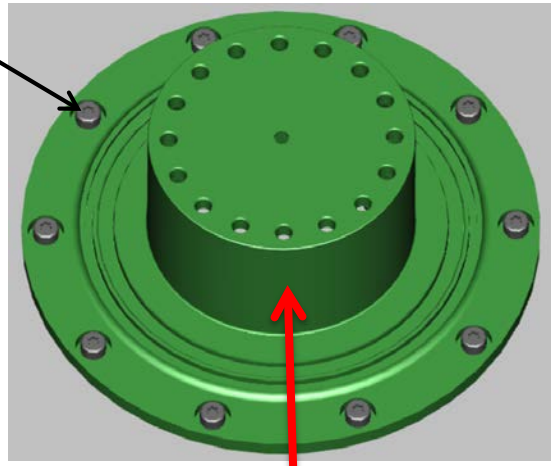

CDP shear = 6071 to 6880 lbf when nonlinearity was observed

Copyright 2016 California Institute of Technology. U.S. Government sponsorship acknowledged. Reference herein to any specific commercial product, process, or service by trade name, trademark, manufacturer, or otherwise, does not constitute or imply its endorsement by the United States Government or the Jet Propulsion Laboratory, California Institute of Technology.

AEROSPACE

MSL – Redesigned Horizontal Swing Arm Design (-Z Applied Load)

-Z applied load is to investigate mobility deployment in the opposite direction causing top deck to buckle in compression before HSA buckles

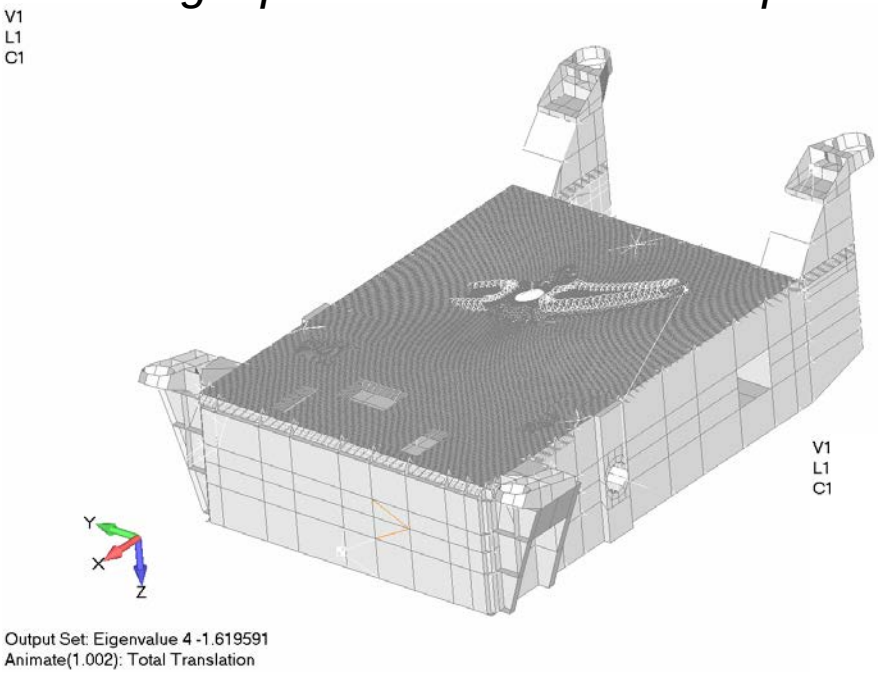

Linear Buckling Results (SOL105):

- Applied Test Load = 2,277 lbf.
- Eigenvalue 4 = -1.62 (Swing Arm Mode)
- Negative eigenvalue for reversed load shows that swing arm is not buckling for the -Z load.
- Compressive buckling occurs (eigenvalues 1 to 3) in top deck panels prior to swing arm buckling mode.

Geometric Nonlinear Static Results (SOL106):

- Applied Load to Nonlinear FEM = 3,900 lbf
- Model converged up to full 3,900 lbf applied load.
- Animation results shows swing arm has less out of plane deflection in Z direction.
- Buckling is observed in Top Deck at same buckled panel locations indicated in the linear buckling model.

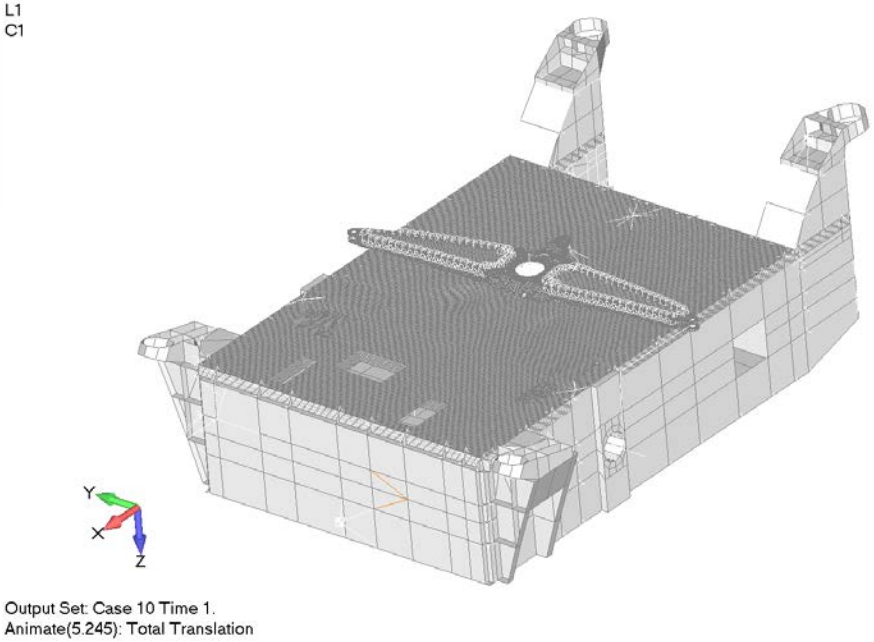

Copyright 2016 California Institute of Technology. U.S. Government sponsorship acknowledged. Reference herein to any specific commercial product, process, or service by trade name, trademark, manufacturer, or otherwise, does not constitute or imply its endorsement by the United States Government or the Jet Propulsion Laboratory, California Institute of Technology.

AEROSPACE

MSL – Redesigned Horizontal Swing Arm Design (-Z Applied Load) Top Deck Buckling

Linear Buckling
- Eigen 1 = 1.25
- Applied Load = 2,277 lbf
- Top Deck Buckling load = 2,277 lbf * 1.25 = 2,846 lbf

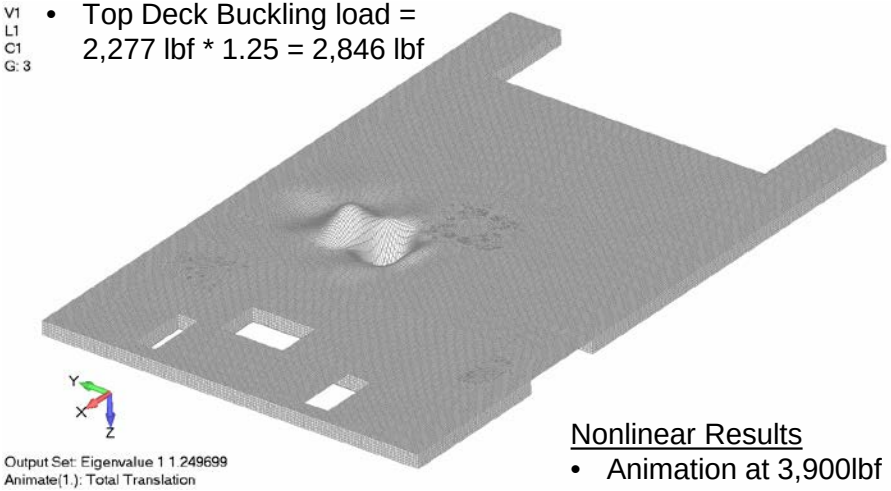

Linear Buckling
- Eigen 3 = 1.57
- Applied Load = 2,277 lbf
- Top Deck Buckling load = 2,277 lbf * 1.57 = 3,575 lbf

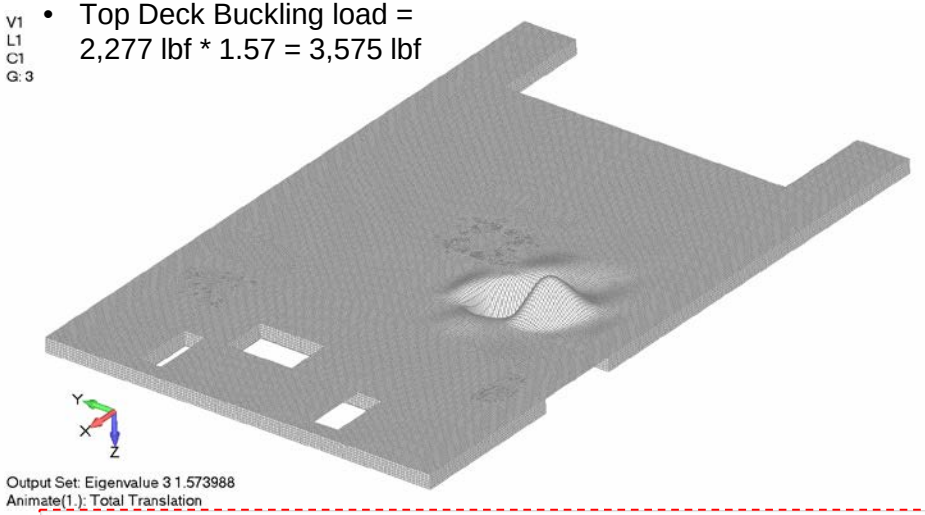

Nonlinear Results
- Animation at 3,900lbf shows buckling of Top Deck panels, as well as overall top deck deformation.

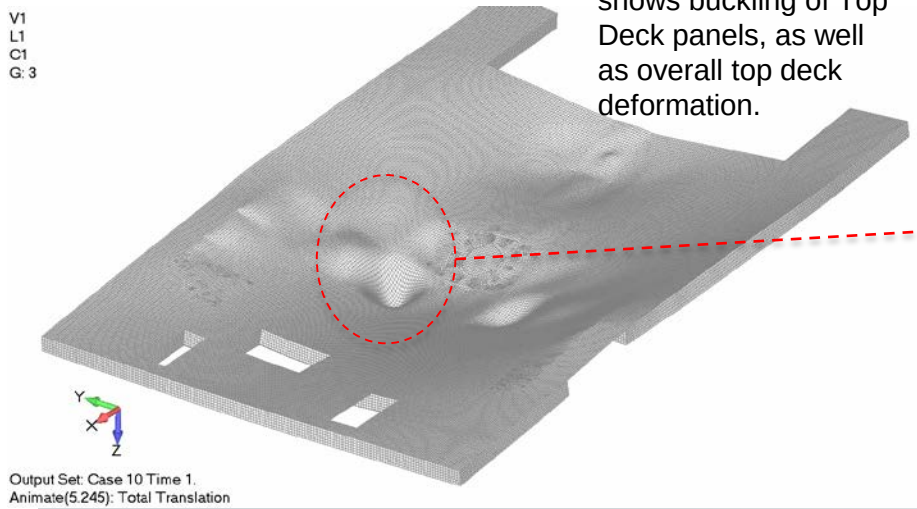

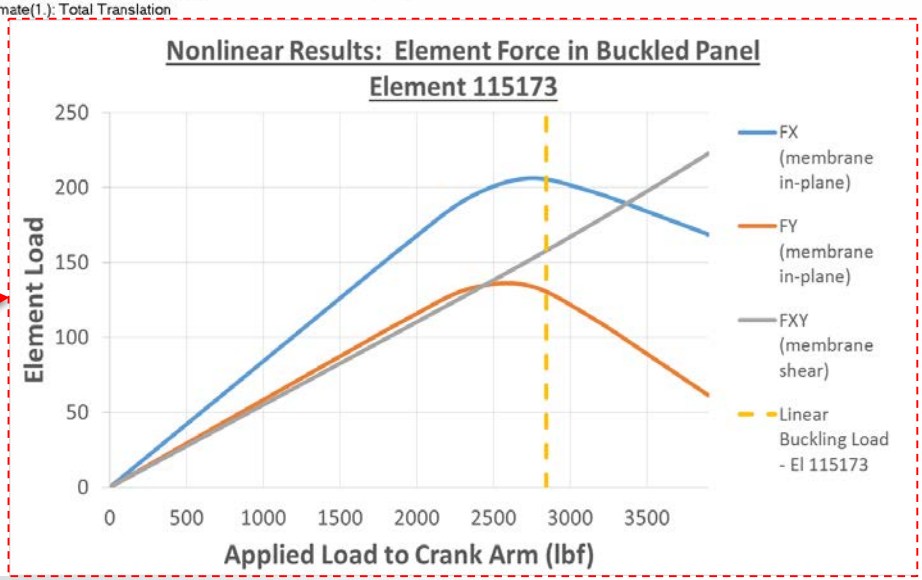

Copyright 2016 California Institute of Technology. U.S. Government sponsorship acknowledged. Reference herein to any specific commercial product, process, or service by trade name, trademark, manufacturer, or otherwise, does not constitute or imply its endorsement by the United States Government or the Jet Propulsion Laboratory, California Institute of Technology.

AEROSPACE

Linear Buckling (λ) and Nonlinear FEA Result Summary

- Both linear buckling solution and nonlinear FEA predicted the original HSA lateral buckling load correctly
- The redesigned HSA is about three times more capable in lateral buckling
  - *Nonlinear analysis predicted lower HSA buckling capability than linear buckling due to larger nonlinear effect at higher load*
  - *+Z and -Z applied loads had different geometric nonlinear effect on HSA where +Z applied load produced higher lateral load on HSA than what -Z applied load produced*

MSL Horizontal Swing Arm - Eigenvalue result comparison (λ)			
Mode No.	Original HSA Design	Redesigned Horizontal Swing Arm - (+Z load applied to crank)	Redesigned Horizontal Swing Arm - (-Z load applied to crank)
1	0.56	-1.18	1.25
2	0.63	-1.47	1.54
3	-0.88	-1.48	1.57
4	-0.92	1.63	-1.62
5	-1.15	-1.90	2.00
6	1.34	-1.98	2.10
7	1.35	-2.13	2.25
8	1.35	-2.22	2.32
9	1.35	-2.33	2.45
10	1.35	-2.57	2.48
* The highlighted cells in red indicate swing arm linear buckling modes.			
*The highlighted cells in blue indicate swing arm only buckles if the applied load is reversed.			

Copyright 2016 California Institute of Technology. U.S. Government sponsorship acknowledged. Reference herein to any specific commercial product, process, or service by trade name, trademark, manufacturer, or otherwise, does not constitute or imply its endorsement by the United States Government or the Jet Propulsion Laboratory, California Institute of Technology.

AEROSPACE

+Z vs. -Z Applied Pull Arm Loads Nonlinear Effect

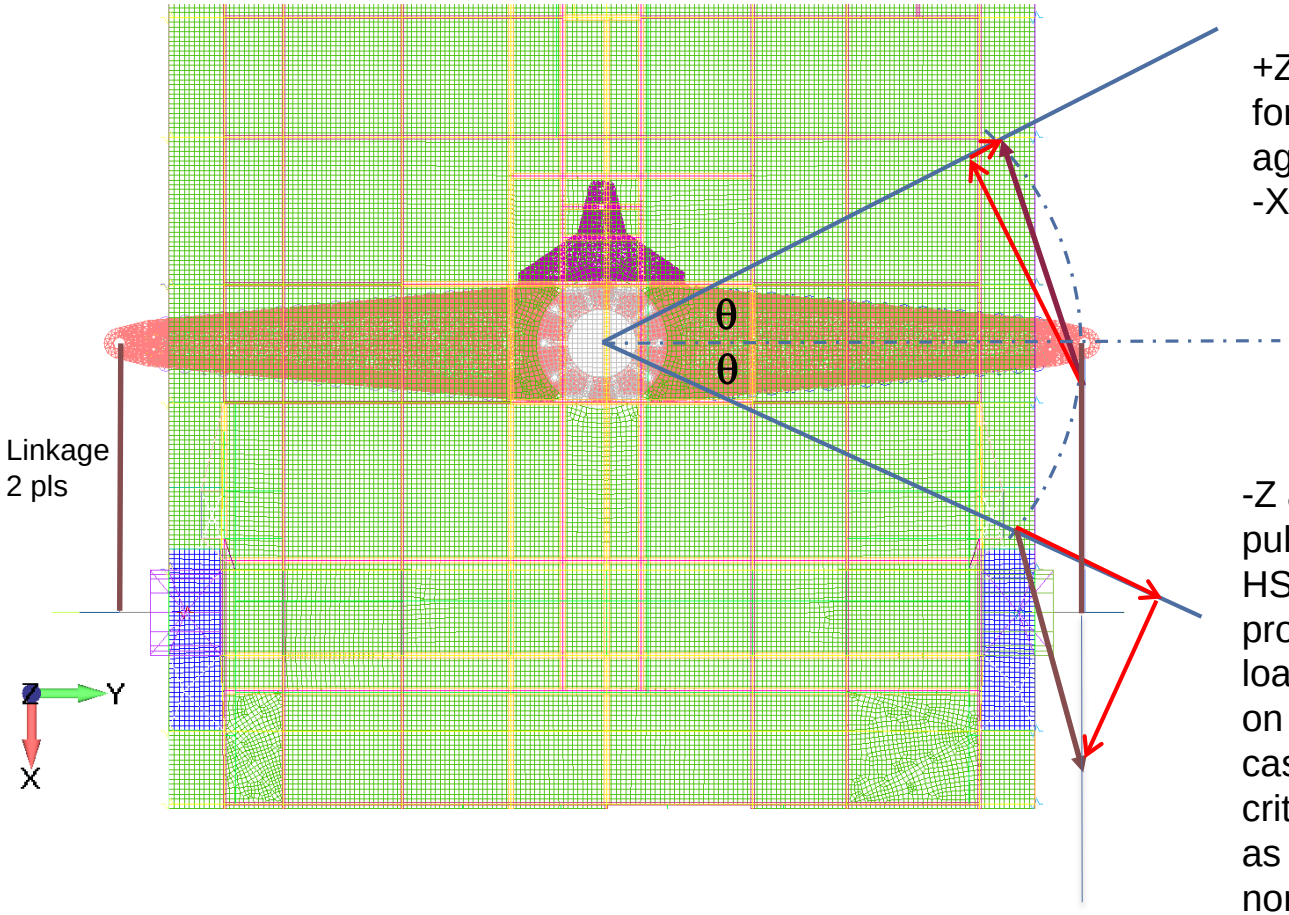

+Z applied pull arm force pushes linkage against the HSA in the -X direction.

-Z applied pull arm force pulls linkage from the HSA in the +X direction, producing less lateral load and more tension on HSA than the +Z case => HSA is less critical in lateral buckling as demonstrated by the nonlinear FEA.

Copyright 2016 California Institute of Technology. U.S. Government sponsorship acknowledged. Reference herein to any specific commercial product, process, or service by trade name, trademark, manufacturer, or otherwise, does not constitute or imply its endorsement by the United States Government or the Jet Propulsion Laboratory, California Institute of Technology.

AEROSPACE

Lessons Learned and Mars2020 Path Forward

- MSL & Mars2020 rover primary structure design is based on shear beam concept where the webs carry only shear but not compression
- The nonlinear FEA confirmed that the compression buckled webs still carry full design shear loads but very little in-plane compression
- FEM for modal test needs to be reverted back to plate model rather than shear panel because webs do not buckle in compression with low input of modal excitation
- M2020 rover plans to tighten the clearance of the screw joints between CDP post and top deck to minimize the nonlinear slip behavior
- Always verify the latest design load vs. the as analyzed load prior to test

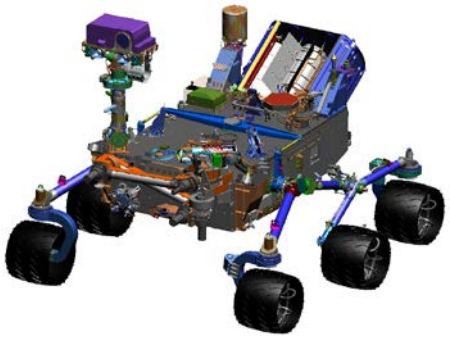

MSL → M2020

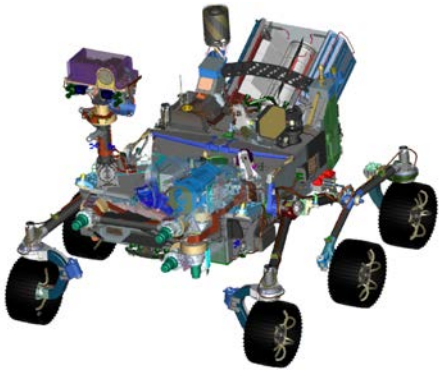

Copyright 2016 California Institute of Technology. U.S. Government sponsorship acknowledged. Reference herein to any specific commercial product, process, or service by trade name, trademark, manufacturer, or otherwise, does not constitute or imply its endorsement by the United States Government or the Jet Propulsion Laboratory, California Institute of Technology.

AEROSPACE

Thank you

AEROSPACE
Assuring Space Mission Success

© The Aerospace Corporation 2016