Welcome

© 2016 California Institute of Technology. Government sponsorship acknowledged.

Load Prediction in Mars 2020 Sample Caching Tube and End Effector

Farzin Montazersadgh *
William Green *

* Jet Propulsion Laboratory, California Institute of Technology

Spacecraft Structures and Dynamics/JPL
June 21–23, 2016

© 2016 California Institute of Technology. Government sponsorship acknowledged.

Overview

- Objective
  - *Determine contact forces due to external forces between components in the composite beam assembly*
- Approach
  - *Build an ADAMS model representing the mechanism*
  - *Apply external forces and plot contact forces*

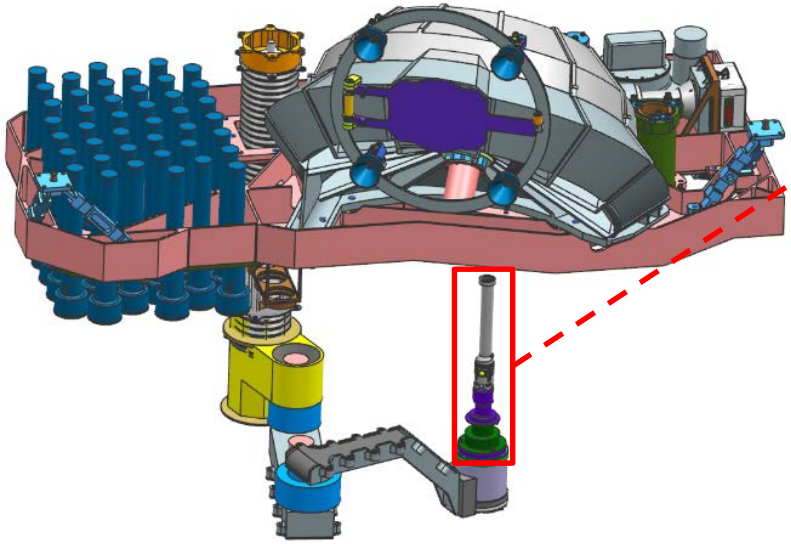

Composite Beam Components

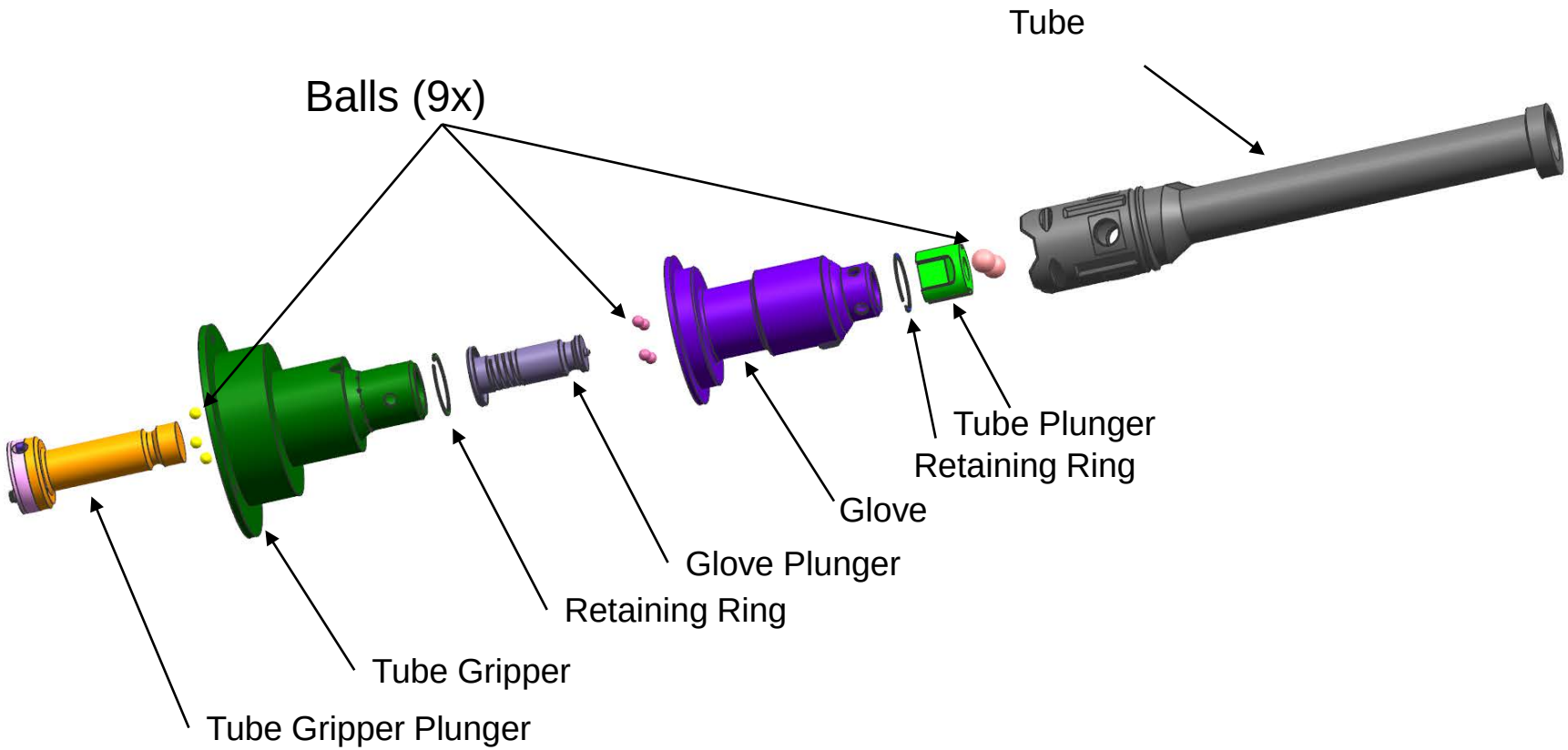

Engagement Sequence

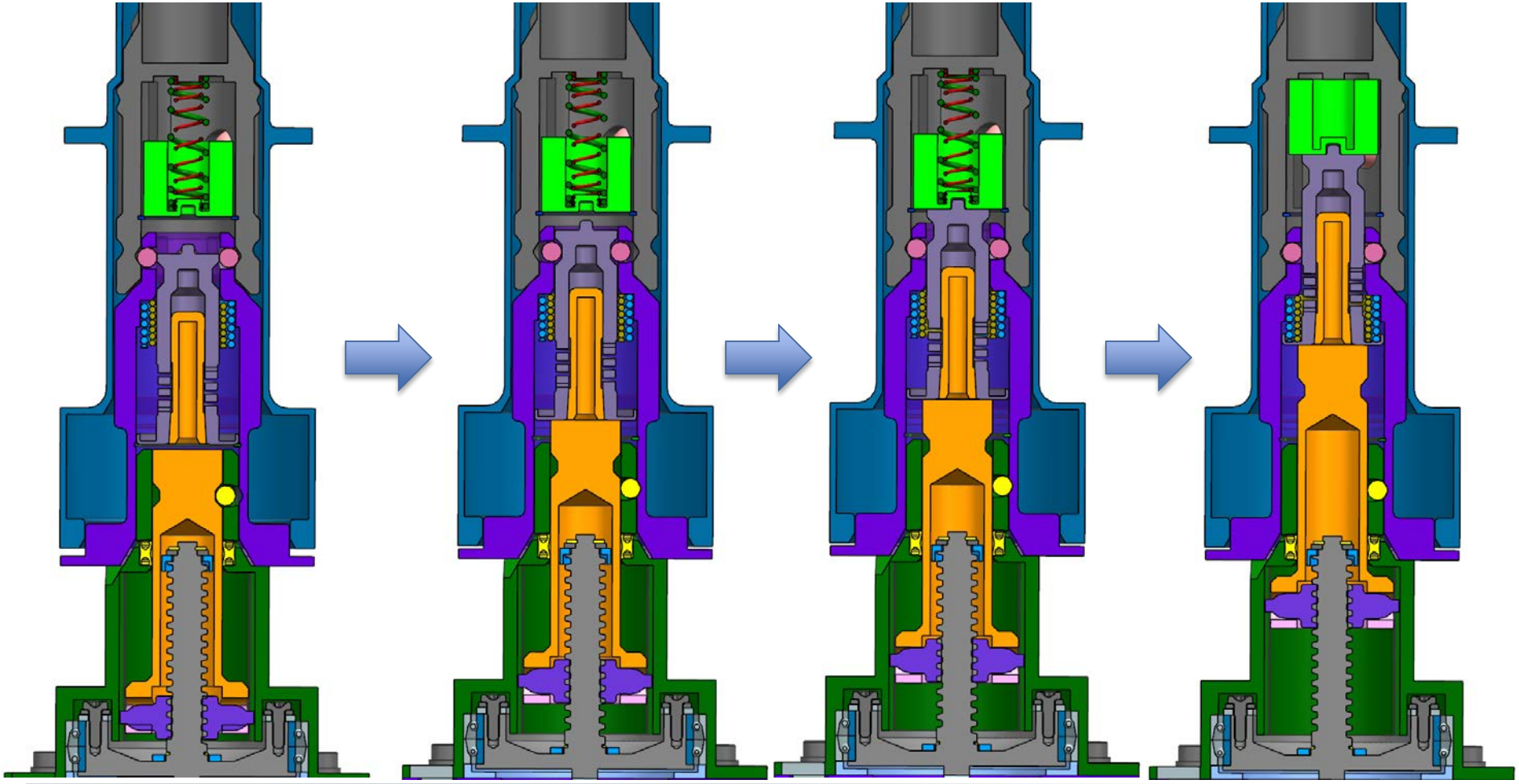

Load Path Through Components

- Load paths in the composite beam is indeterminate
- ADAMS model helps in understanding how the composite beam shares load
- The model predicts very high contact stress on all the balls
- When the composite beam is engaged:
  - *Plungers are in compression*
  - *Housings are in tension*

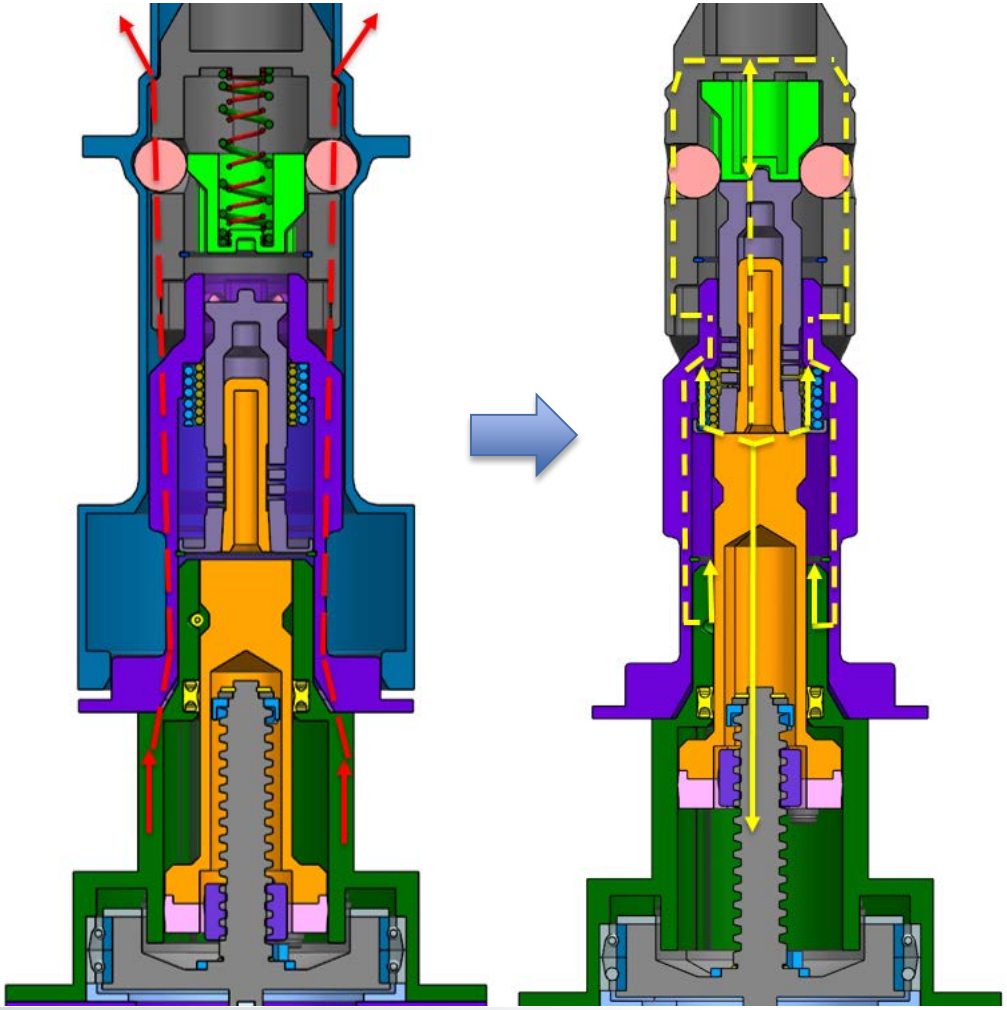

Details of Modeling Ball Lock

- After balls are engaged they carry the load though 3 contact points as shown below

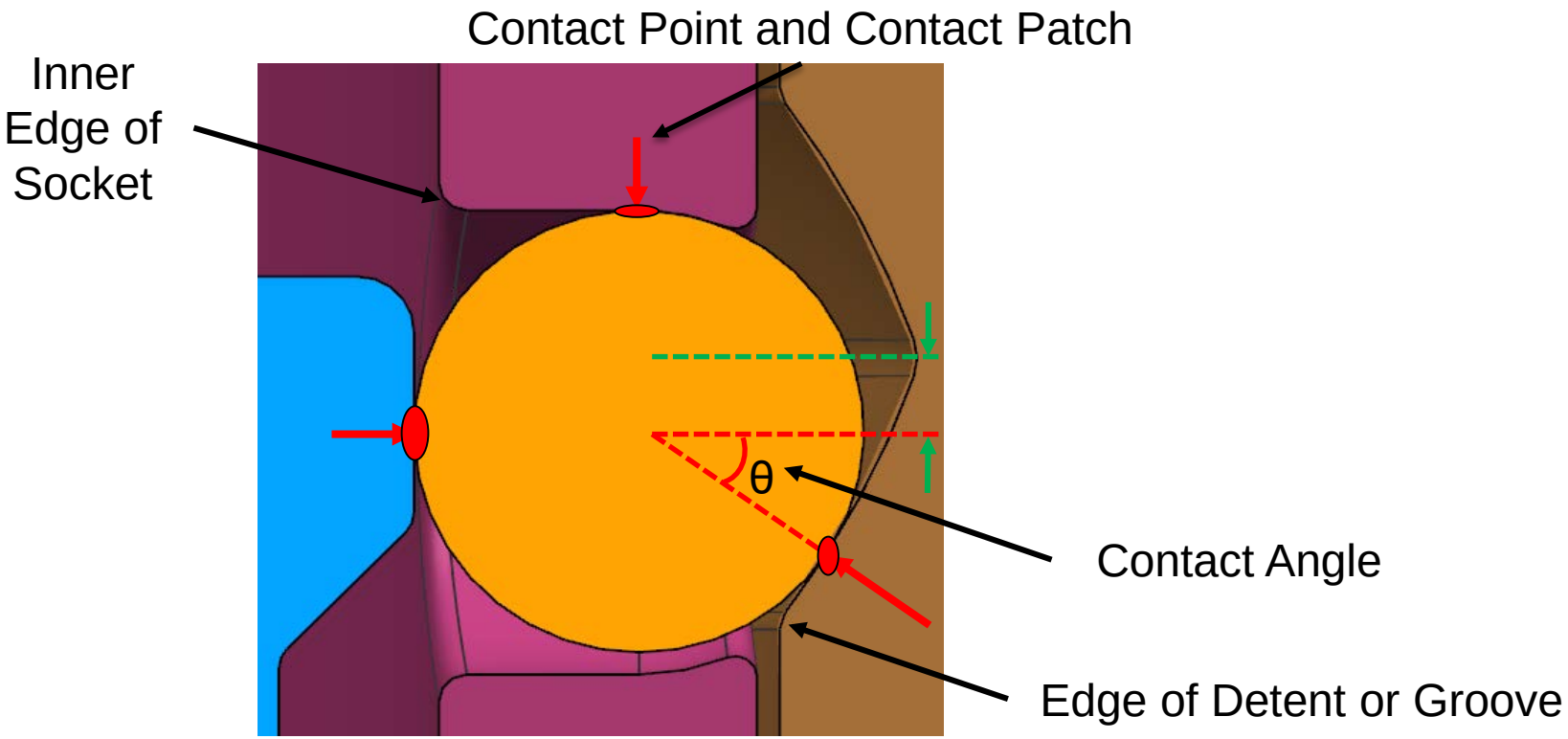

Ball/Cone Modeling Details

- A geometry based impact takes a long time to solve therefore a macro was developed to create forces representing the ball/cone contact
  - *Geometry based model run time = ~2 hours*
  - *VFORCE based model run time = ~3 minutes*
- Each cone is represented with 32 planes and has the capability of easily increasing the number of planes

Ball/Cone Demo

Ball Engagement and External Load Animation

Test Setup and External Load

- The sheath can be taken out since it will be out of the load path.
- Since it will be easier to fix the end effector end and apply the side load on the tube the test setup was prepared as shown:

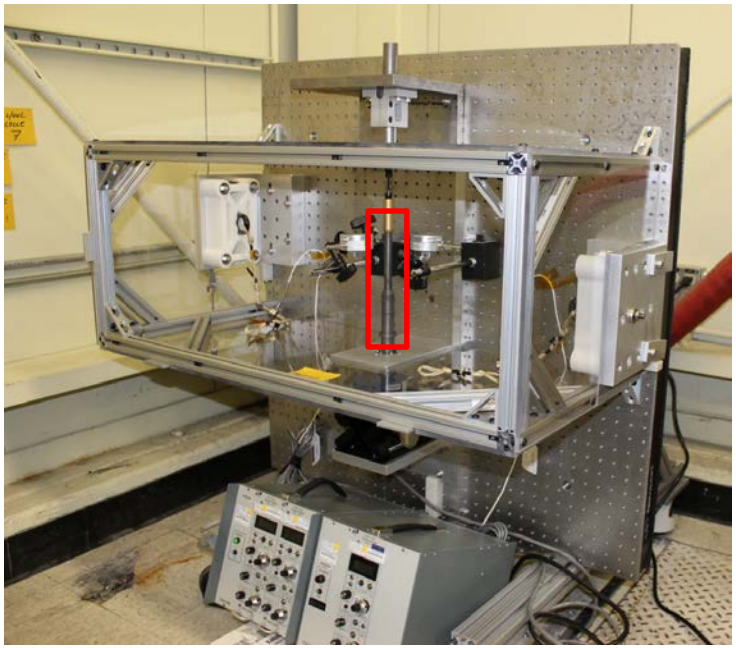

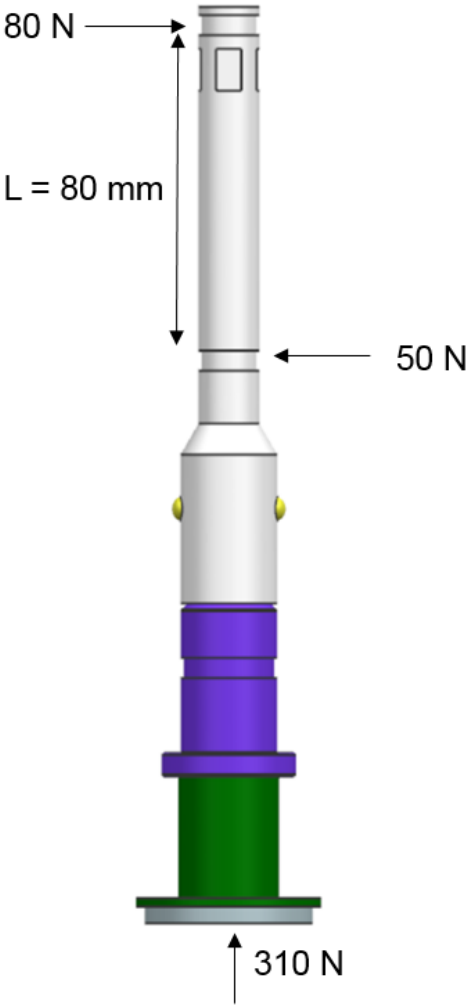

Loading Stages in Test Setup

- First an axial load of 110 N is applied to engage the composite beam
- Then an additional 200 N is applied to mimic SHA pull down/push force
  - *Apply the load through the plunger stack simulates the push/pull force at the same time*
- Side loads are applied last

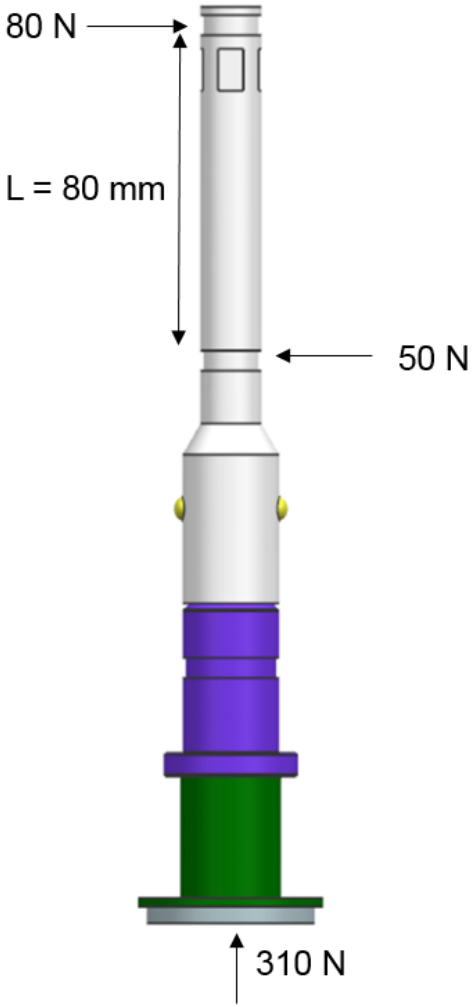

Force on Balls During Axial Load

- 310 N is applied to push the plungers up

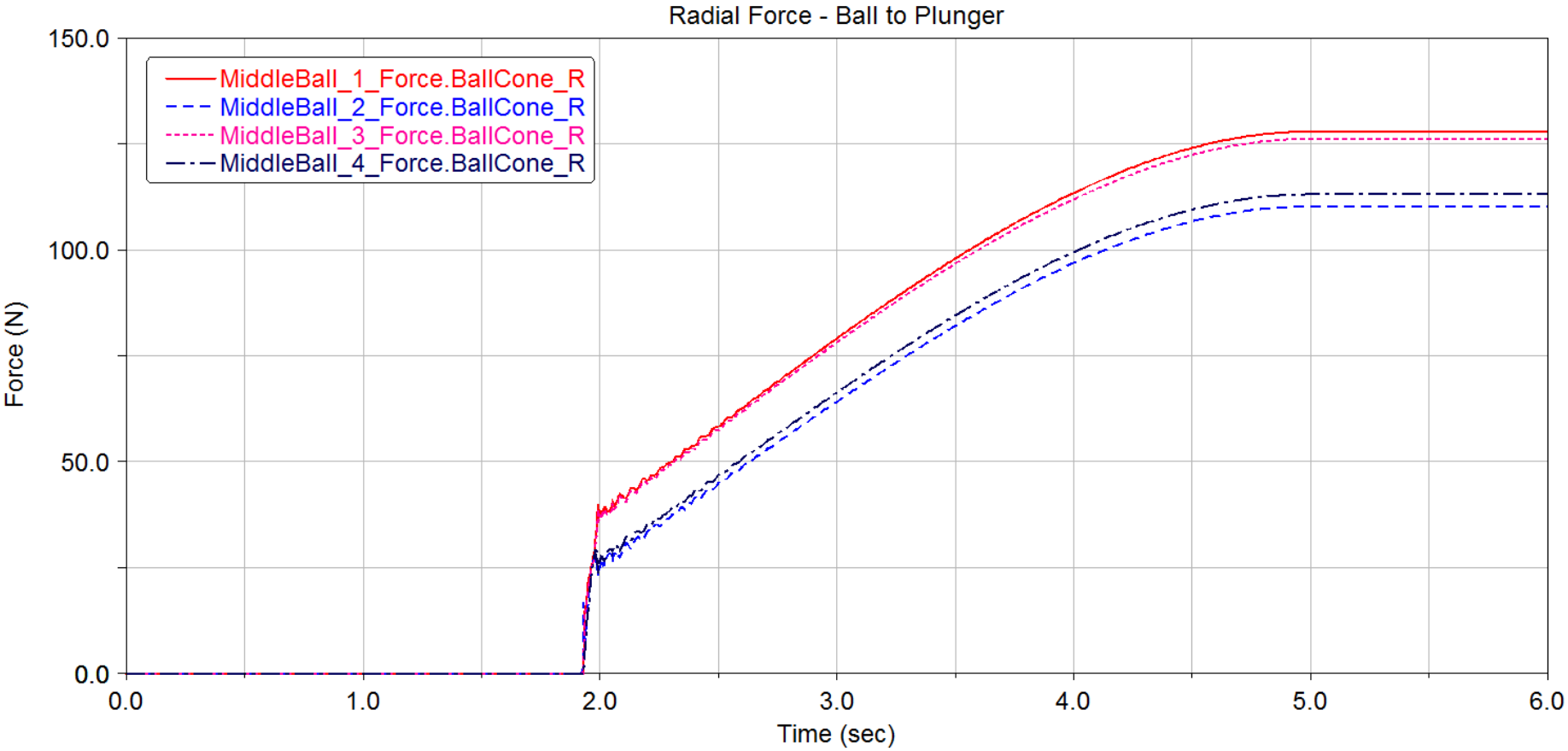

Force on Balls During Side Loads

- Since the load between ball and plunger are high enough to make a dent in the plunger body, they were constrained with a fixed joint to the plunger and side loads were applied after that

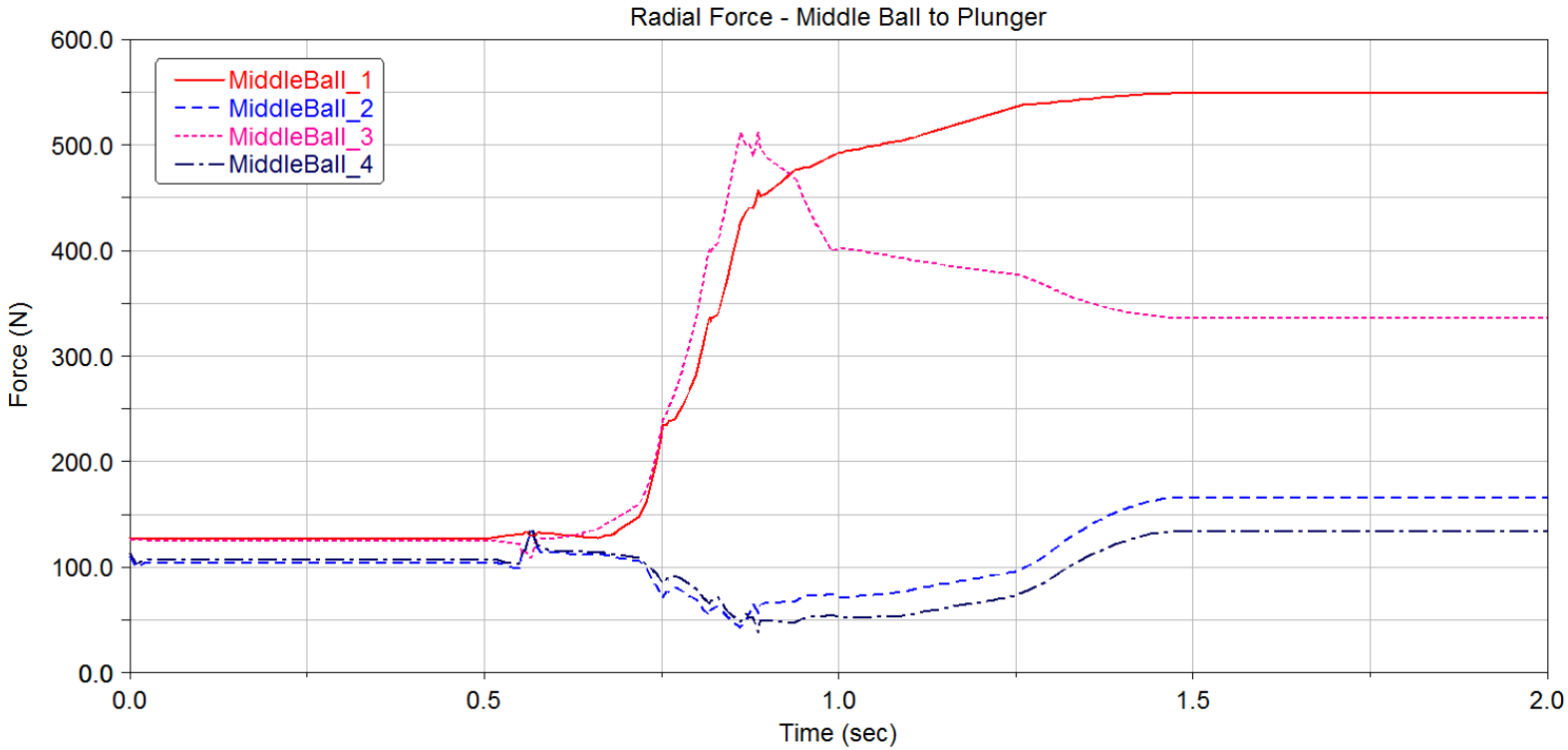

Testbed Measurement vs. ADAMS Simulation

		Predicted	Unit 1	Unit 2	Unit 4
1x	Ball 1 Load (N)	550	570	550	
	Ball 2 Load (N)	150	290	150	
	Ball 3 Load (N)	500	465	390	
	Ball 4 Load (N)	150	290	200	
2x	Ball 1 Load (N)	725	685		
	Ball 2 Load (N)	450	425		
	Ball 3 Load (N)	525	540		
	Ball 4 Load (N)	450	425		

Within 10% of predicted value
Testbed overshoot load

Load prediction in Mars 2020 Sample Caching Tube and End Effector

Farzin Montazersadgh *
William Green *

* Jet Propulsion Laboratory, California Institute of Technology

Spacecraft Structures and Dynamics
June 21-23, 2016
Farzin.Montazersadgh@jpl.nasa.gov
626-993-4953

© 2016 California Institute of Technology. Government sponsorship acknowledged.

Thank you

© 2016 California Institute of Technology. Government sponsorship acknowledged.