Welcome

Reference herein to any specific commercial product, process, or service by trade name, trademark, manufacturer, or otherwise, does not constitute or imply its endorsement by the United States Government or the Jet Propulsion Laboratory, California Institute of Technology.

AEROSPACE
Assuring Space Mission Success

© The Aerospace Corporation 2016

Deployment Modeling for the Surface Water and Ocean Topography (SWOT) Mission

Laura Redmond
Farzin Montazersadgh

Jet Propulsion Laboratory, California Institute of Technology

352L Spacecraft Structures and Dynamics
June 21–23, 2016

Reference herein to any specific commercial product, process, or service by trade name, trademark, manufacturer, or otherwise, does not constitute or imply its endorsement by the United States Government or the Jet Propulsion Laboratory, California Institute of Technology.

AEROSPACE
Assuring Space Mission Success

© The Aerospace Corporation 2016

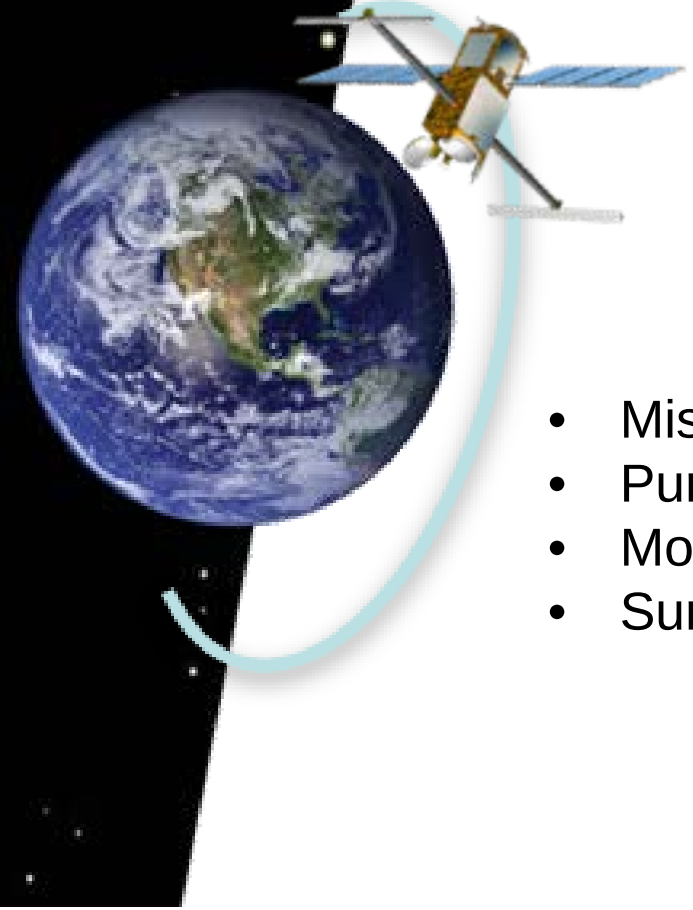

Outline

- Mission Overview
- Purpose of the Model
- Model Details
- Summary and Future Work

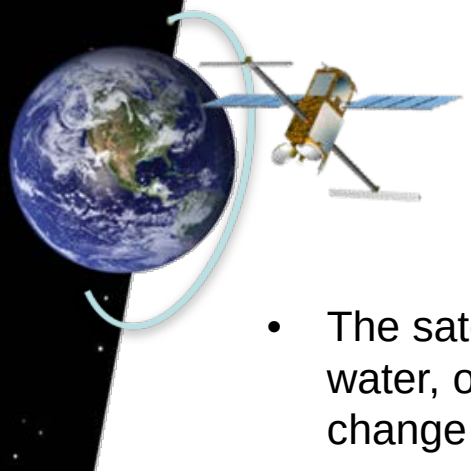

SWOT Mission Overview

- The satellite will be used to make the first global survey of the earth's surface water, observe details of the ocean topography, and measure how water bodies change over time.

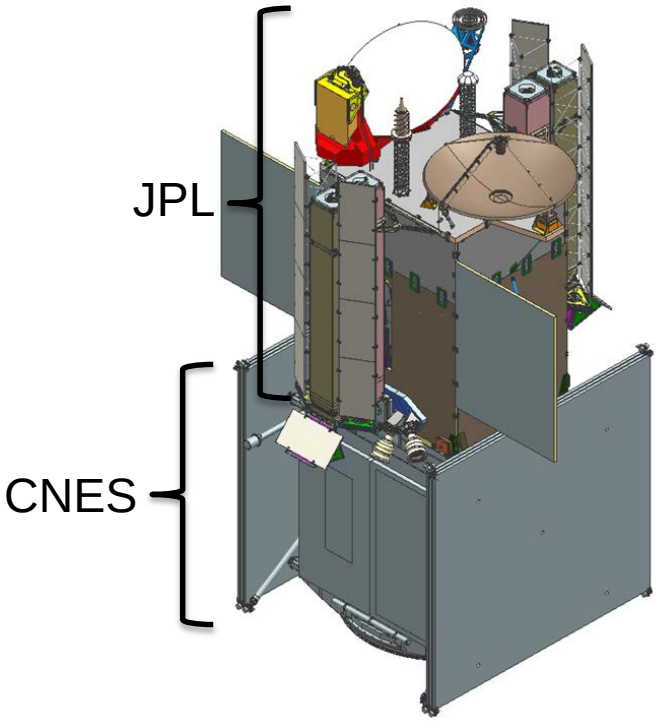

Launch Configuration

Image courtesy of Paul Rapacz

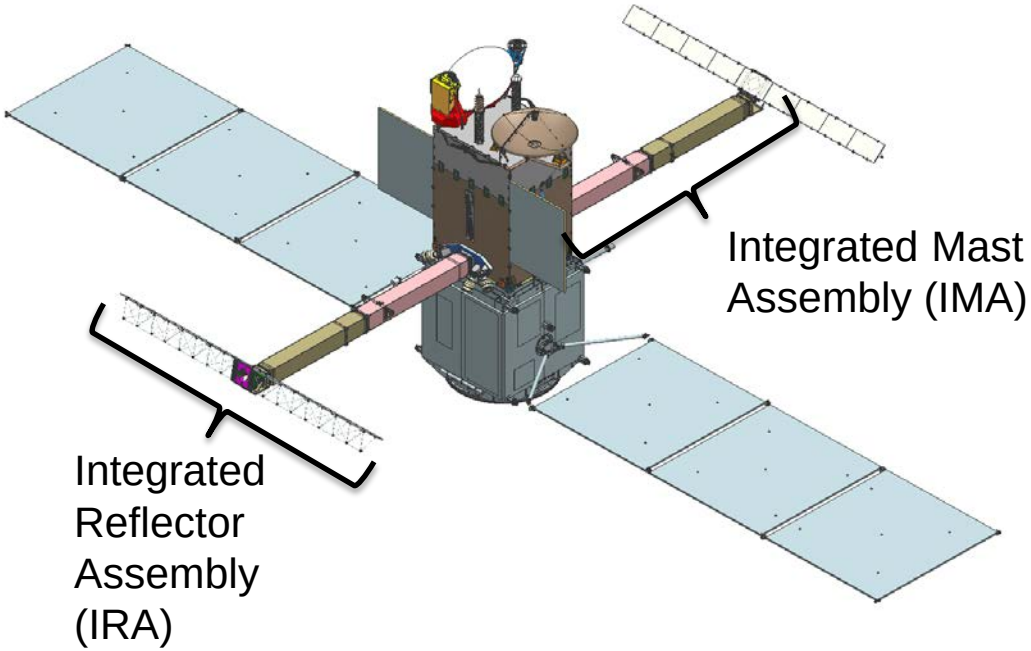

Mission Configuration

Image courtesy of Paul Rapacz

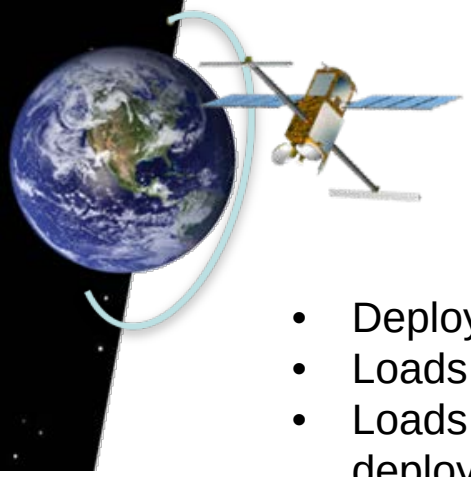

Purpose of the Model

- Deployment duration
- Loads on IMA and IRA components during deployment
- Loads generated at the interface between the spacecraft and payload during deployment.

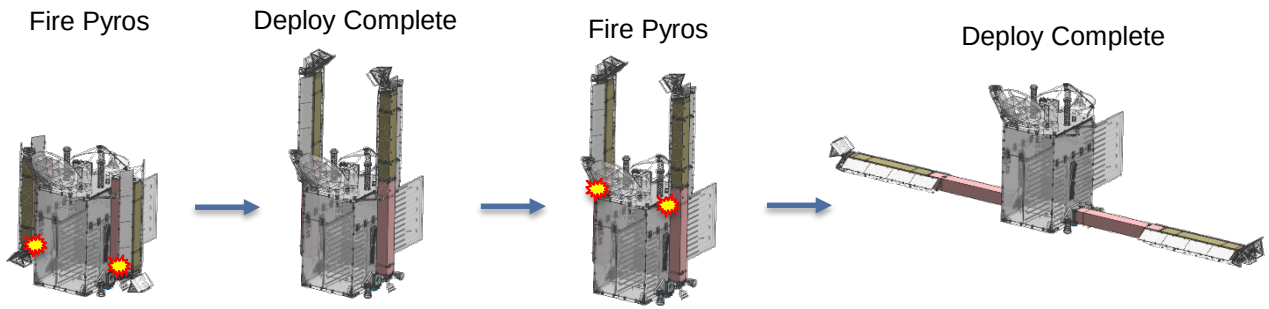

IMA Deployment
- Launch restraints
- Kick off plungers
- Slop in the hinges
- Torsion spring/damper
- Catch plungers
- Motor driven latch mechanism

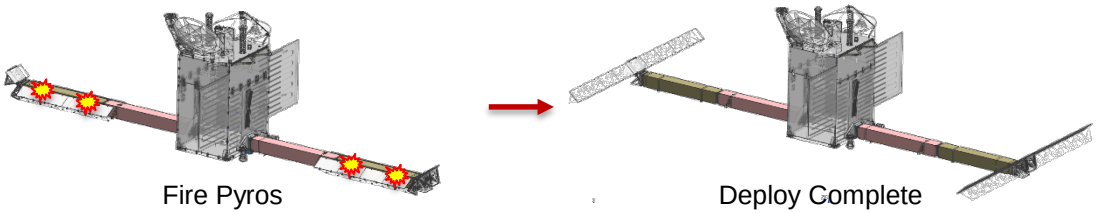

IRA Deployment
- Launch restraints
- Kick off plungers
- Ratchet mechanism (TBD)
- Cable driven final deployment (In work)

Images courtesy of Paul Lytal and Jeff Waldman

Launch Restraint and Kick Off Plungers

- Cable launch restraints are modeled with a single direction spring that has a preload representative of the flight cable.
- The modeled spring compresses the kick off plungers which are used to ensure separation of the deployed segments.

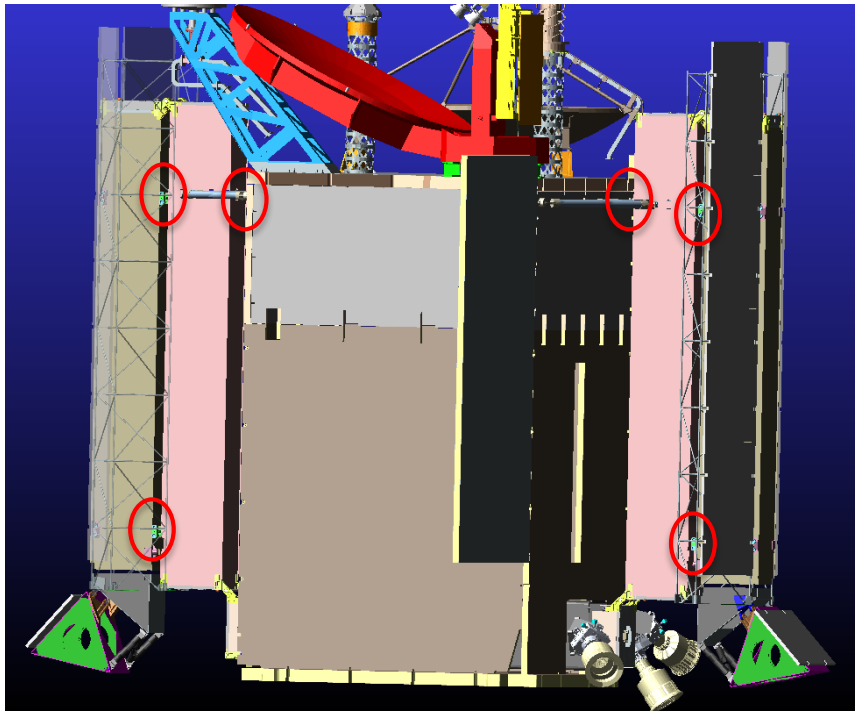

SWOT Model

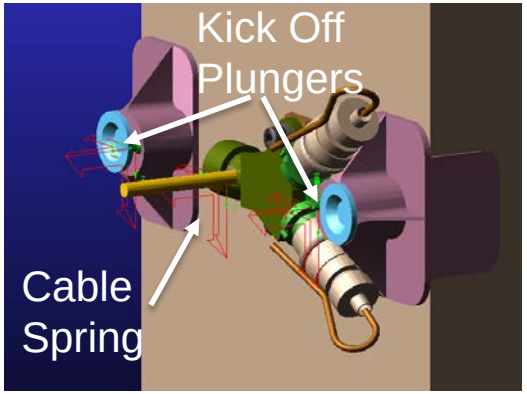

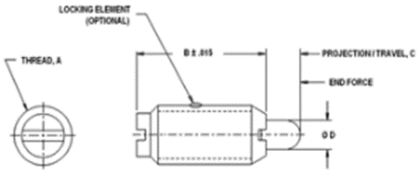

Launch Restraint and Kick Off Plungers

Hinge Bodies: hinge slop

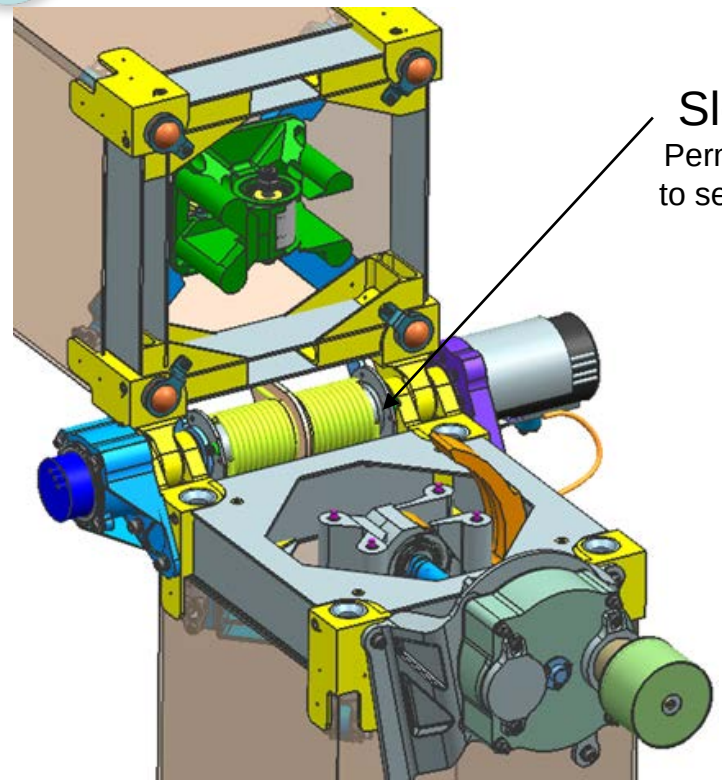

Hinge Body

Image courtesy of Paul Lytal

Slop in the Hinge

Permits the balls and cones to seat evenly for preloading

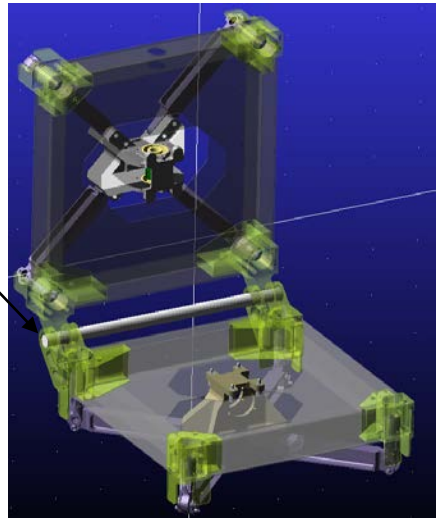

ADAMS Model

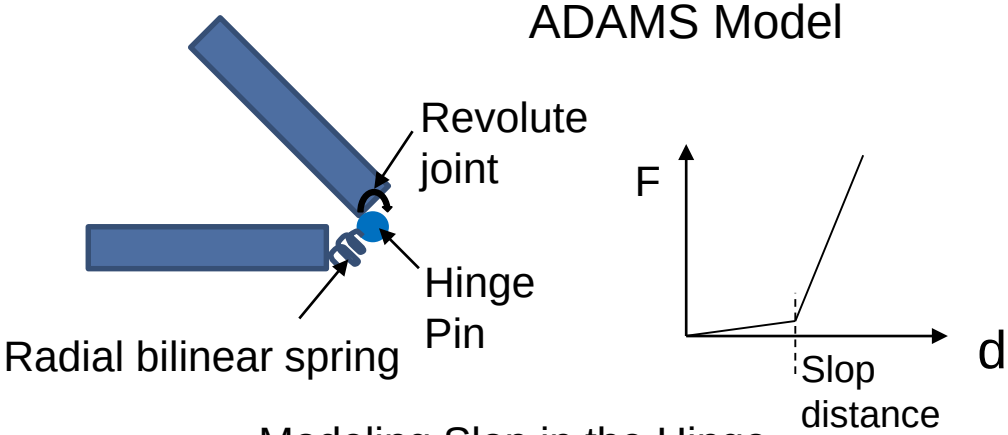

Modeling Slop in the Hinge

Hinge Bodies: catch plungers

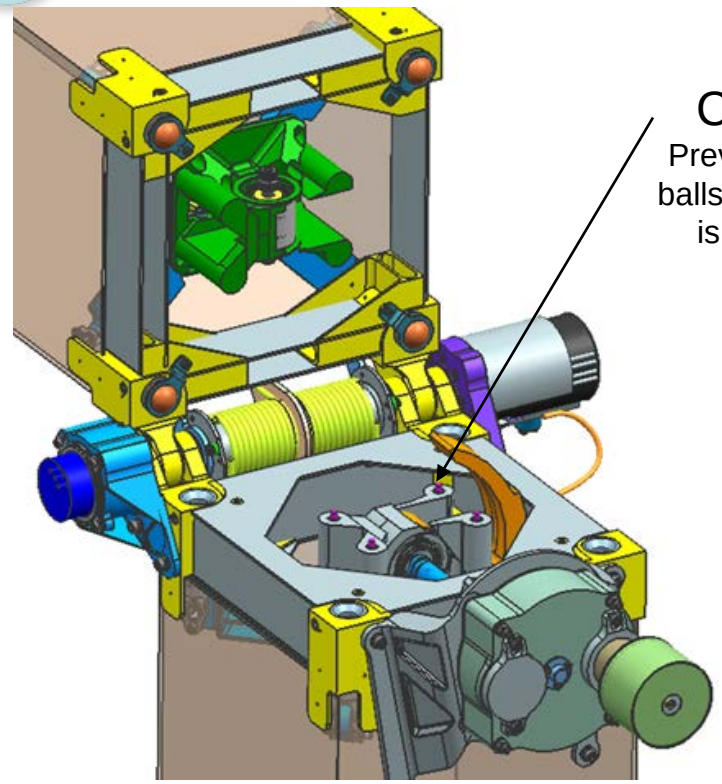

Hinge Body

Image courtesy of Paul Lytal

Catch Plungers

Prevent hard contact of the balls and cones as the hinge is closed by the torsion springs

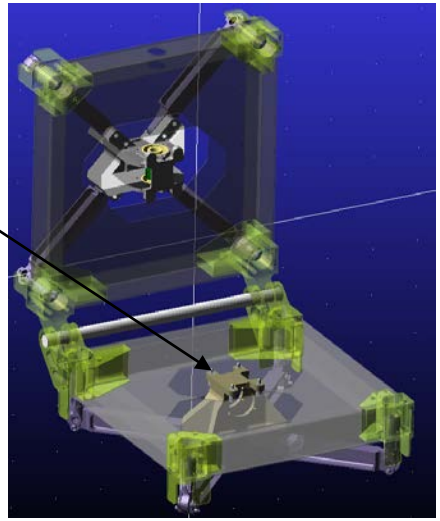

ADAMS Model

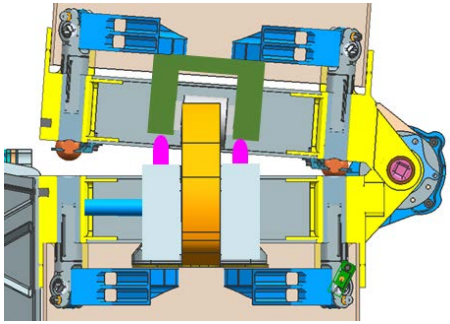

Catch Plunger Initial Contact

Image courtesy of Paul Lytal

Hinge Bodies: cup and ball contacts

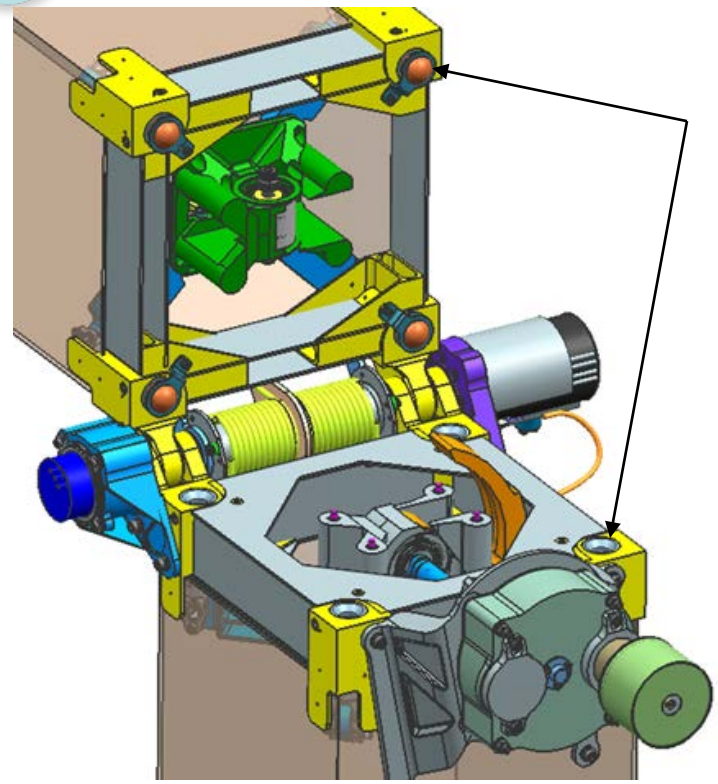

Hinge Body

Image courtesy of Paul Lytal

Cup and Ball Contacts

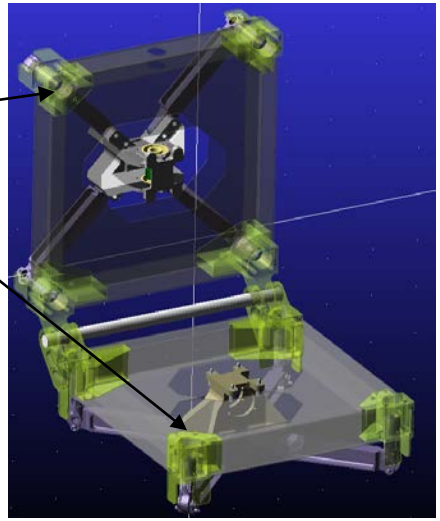

ADAMS Model

Markers used for BISTOP

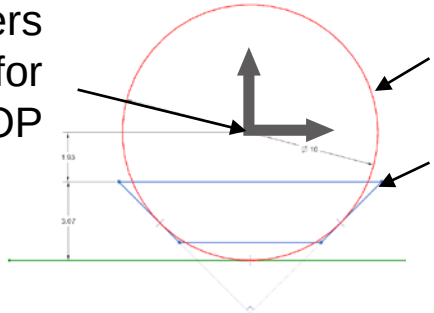

Sphere outline

Cone outline

Cup/Ball Contact Equations

Hinge Bodies: spider stiffness

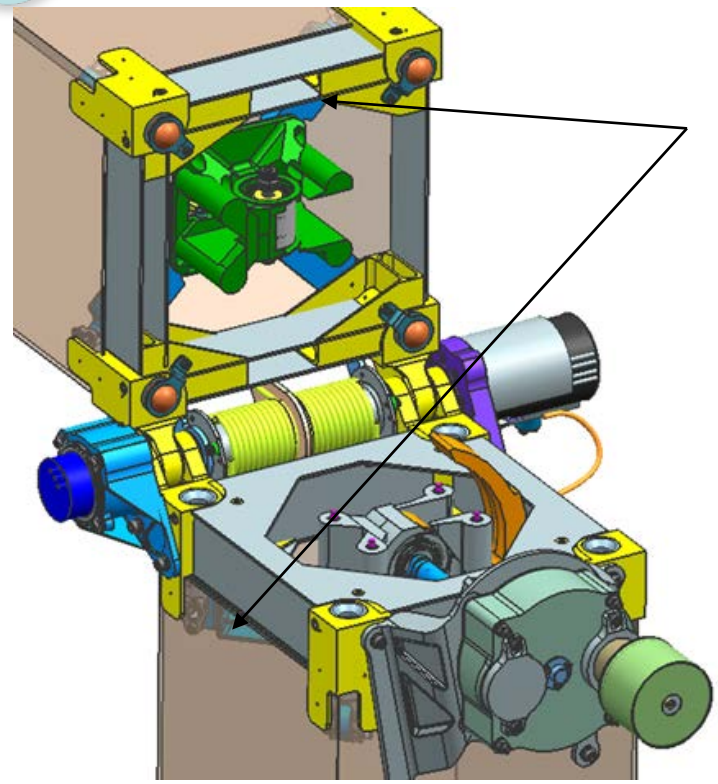

Hinge Body

Image courtesy of Paul Lytal

Spiders

Main source of compliance as the hook preloads the roller

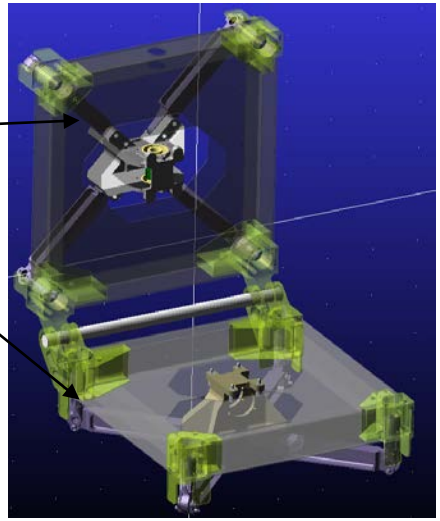

ADAMS Model

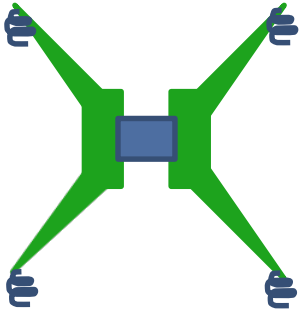

Bushings to Model Spider Compliance

Springs correlated with FE models

Hinge Bodies: torsion spring and damper

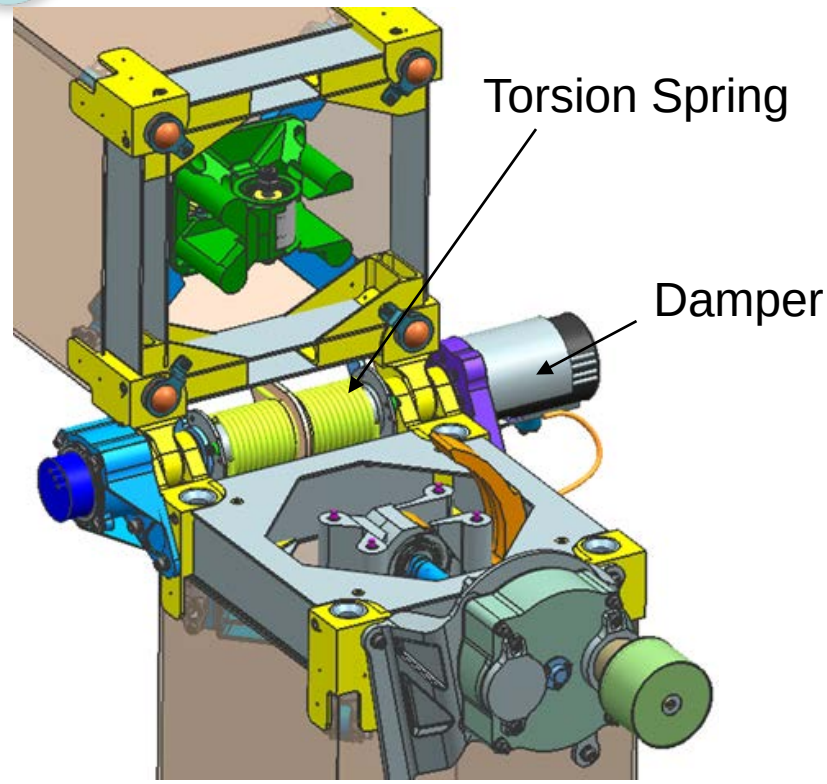

Hinge Body

Image courtesy of Paul Lytal

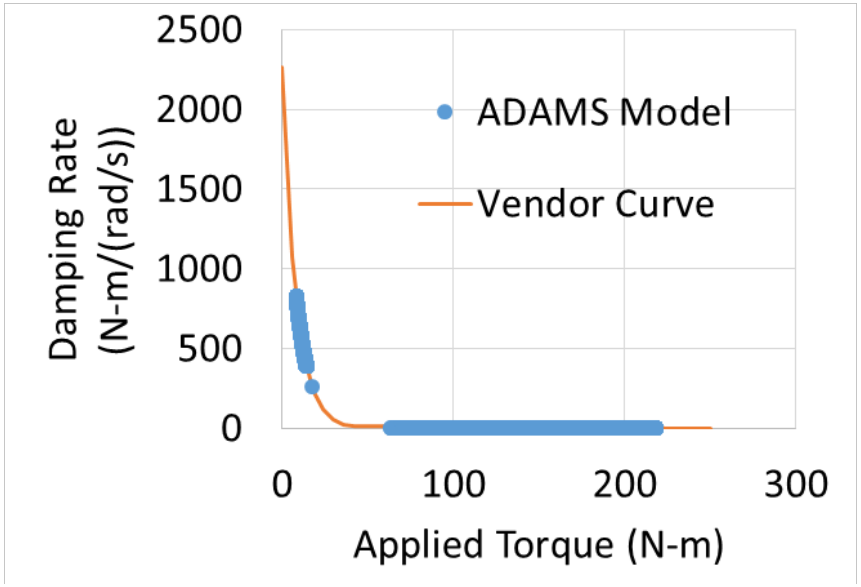

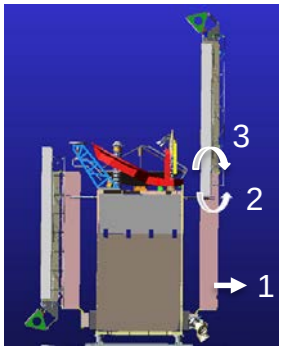

Applied Torques

1. Launch restraints and kick off springs
2. Torsion springs and harness effect
3. Impact with catch plungers or cup/ball contacts

Catch Plunger Sizing

- Adams was used to verify the catch plunger sizing was sufficient to prevent hard contact of the cup and balls during deployment.
- Model includes a detailed hinge representation fixed to ground at one interface and attached to a part with representative mass and inertia for the SWOT root deployment

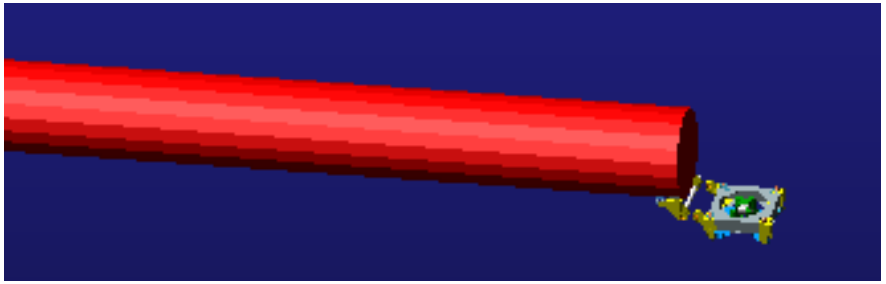

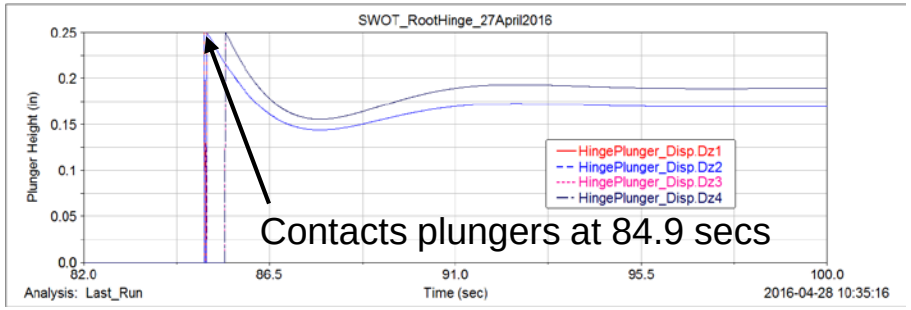

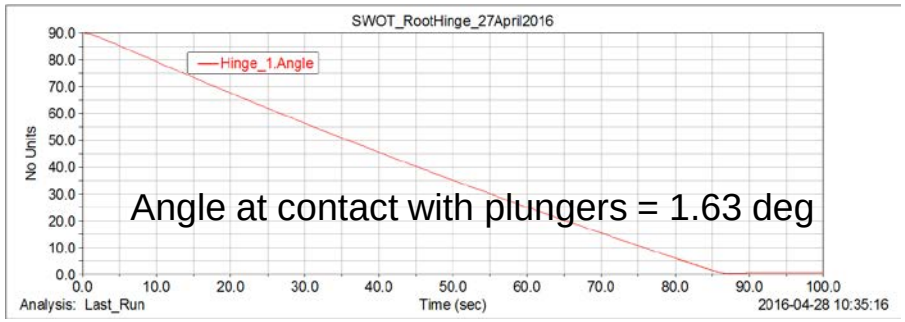

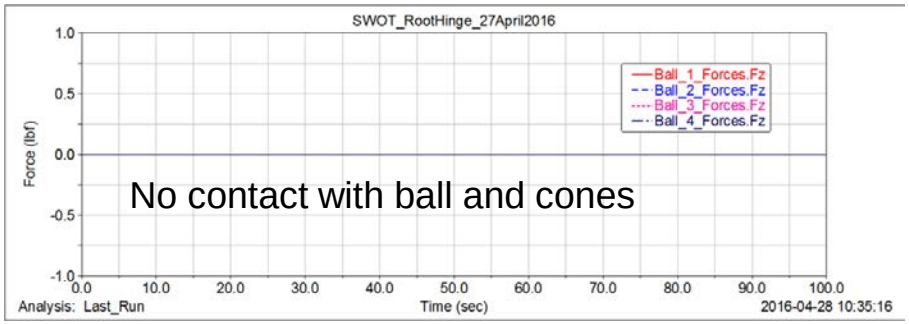

Hinge Bodies: Motor Driven Latching

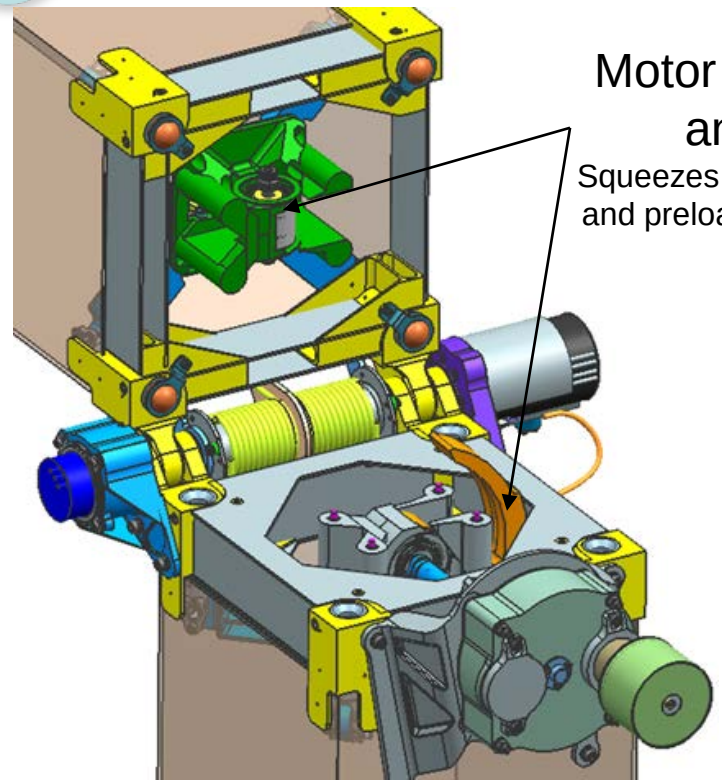

Motor Driven Hook and Roller

Squeezes together the spiders and preloads the cup/ball joint

Hinge Body

Image courtesy of Paul Lytal

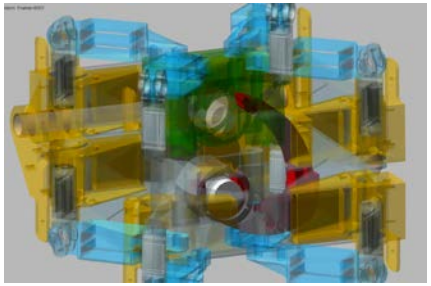

Contact Modeling for Hook and Roller

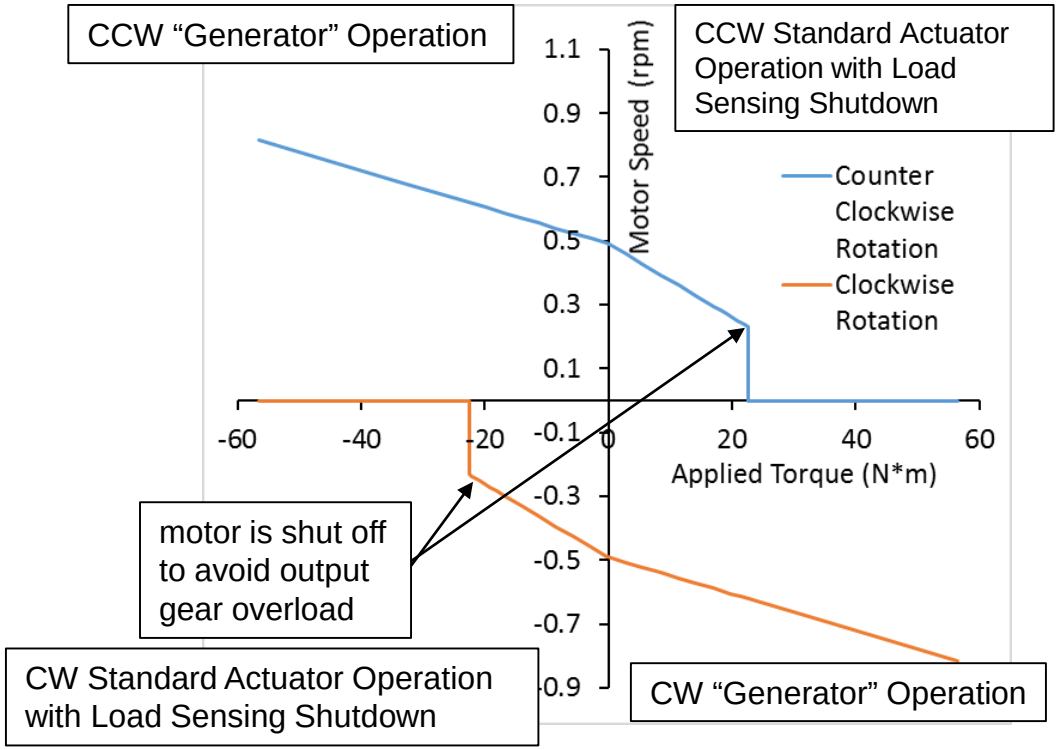

IRA Deployment

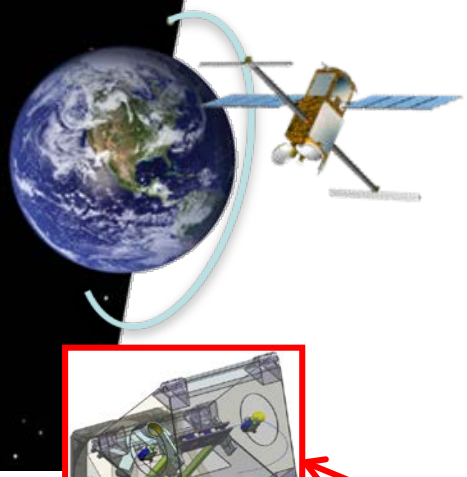

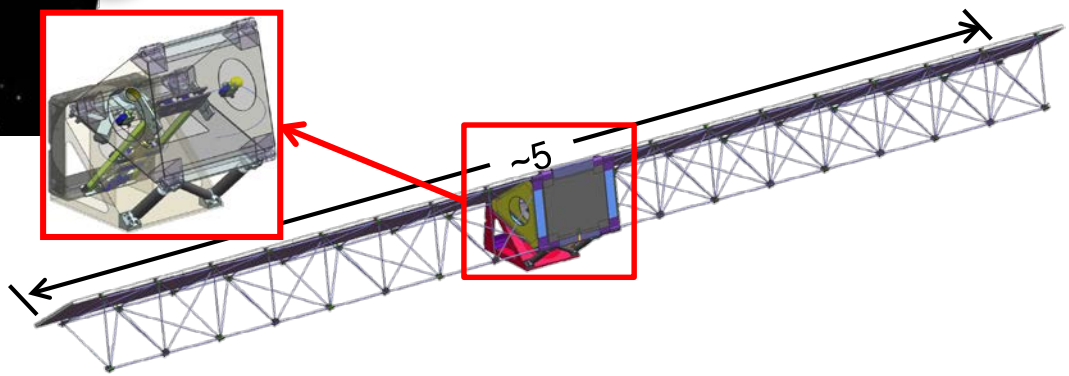

Detailed View of IRA
Image Courtesy of Matt Stegman

- The pulley driven system was modeled using ADAMS machinery.
- Work is in progress to accommodate the architecture change from a block and tackle system to an actuator driven system.

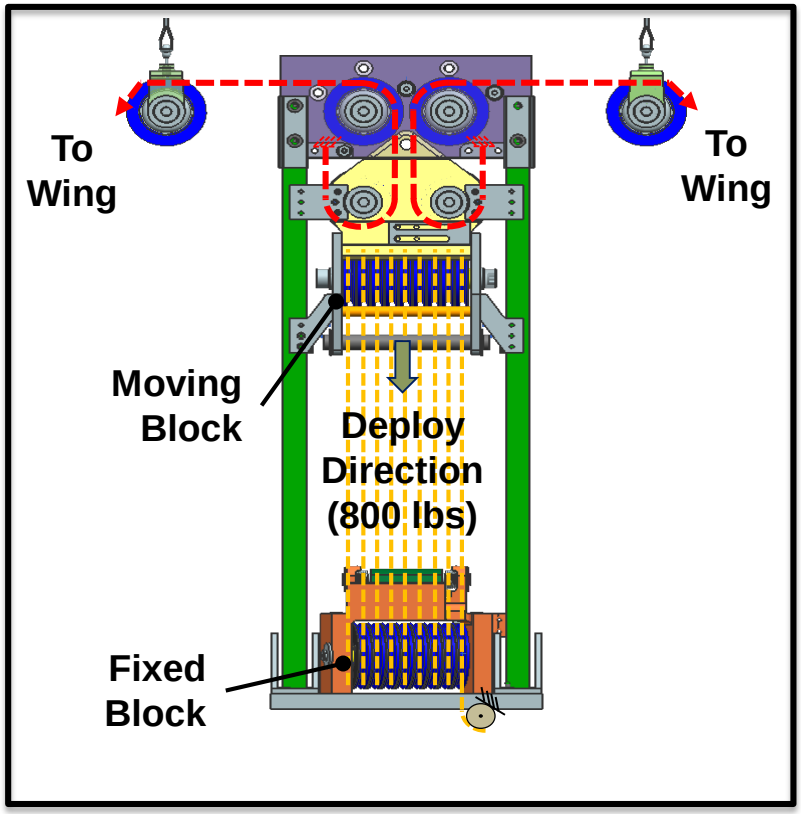

Detailed View of Cable Driven Deployment
Image Courtesy of Matt Stegman

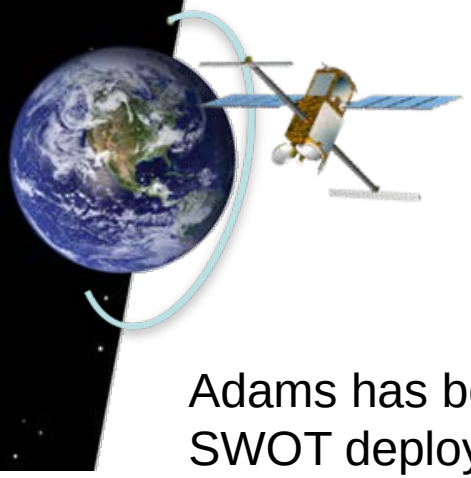

Summary and Future Work

Adams has been used in several unique ways to capture details of the SWOT deployment mechanisms including:

- Launch restraint preloads
- Slop in the hinges
- Efficient non-point contact enforced with equations
- Torque dependent damping rates
- Torque vs. speed curves for motor modeling

Future work will include:

- Incorporating the new design of the IRA deployment mechanism
- Obtaining a spacecraft model to characterize accelerations caused by deployment
- Incorporating flexibility using FE parts

Thank you

Reference herein to any specific commercial product, process, or service by trade name, trademark, manufacturer, or otherwise, does not constitute or imply its endorsement by the United States Government or the Jet Propulsion Laboratory, California Institute of Technology.

AEROSPACE
Assuring Space Mission Success

© The Aerospace Corporation 2016