NISAR L-band Digital Electronics Subsystem

A Multichannel System with Distributed Processors for Digital Beam Forming and Mode Dependent Filtering

Chung-Lun Chuang, Scott Shaffer, Noppasin Niamsuwan, Samuel Li, Eric Liao, Chester Lim, Vu Duong, Barry Volain, Ken Vines, Muh-Wang Yang, Kevin Wheeler

Jet Propulsion Laboratory, California Institute of Technology

Copyright 2016 California Institute of Technology

May 4, 2016

Mission Overview

Mission Science

Ecosystem Structure

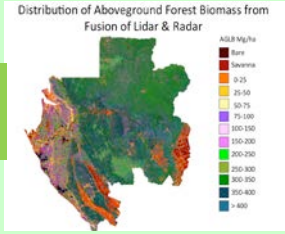

Biomass disturbance; effects of changing climate on habitats and CO_2

Cryosphere

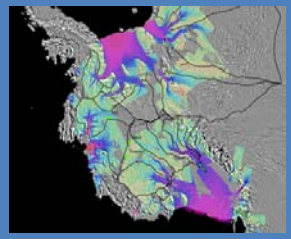

Ice velocity, thickness; response of ice sheets to climate change and sea level rise

Solid Earth

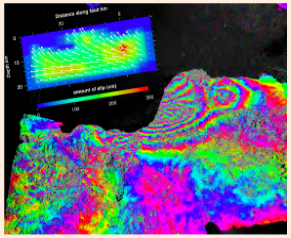

Surface deformation; geo-hazards; water resource management

- Directed mission within the Earth Systematic Missions Program under NASA Earth Science Division
- Category 2 project (NPR 7120.5E) and Payload risk class C (NPR 8705.4)
- Major international partner: Indian Space Research Organization (ISRO) who is supplying the launch vehicle, S/C, and S-band radar
- Baseline launch date: No earlier than December 2020 (T-5 years)
- Dual frequency L- and S-band Synthetic Aperture Radar (SAR)
  - L-band SAR from NASA and S-band SAR from ISRO
- Sweep SAR technique (large swath) for global data collection
- Baseline orbit: 747 km altitude circular, 98 degrees inclination, sun-synchronous, dawn-dusk (6 PM–6 AM), 12-day repeat
- Repeat orbit within ± 250 m
- Spacecraft: ISRO I3K (flown at least 9 times)
- Launch vehicle: ISRO Geosynchronous Satellite Launch Vehicle (GSLV) Mark-II (4-m fairing)
- 3 years science operations (5 years consumables)
- All science data (L- and S-band) will be made available free and open, consistent with the long-standing NASA Earth Science open data policy

Science Objectives and Priority

Key Scientific Objectives

- Understand the response of ice sheets to climate change and the interaction of sea ice and climate
- Understand the dynamics of carbon storage and uptake in wooded, agricultural, wetland, and permafrost systems
- Determine the likelihood of earthquakes, volcanic eruptions, and landslides

Key Applications Objectives

- Understand societal impacts of dynamics of water, hydrocarbon, and sequestered CO_2 reservoirs
- Provide agricultural monitoring capability in support of food security objectives
- Apply NISAR's unique data set to explore the potentials for urgent response and hazard mitigation

Priorities

- Three principal science objectives listed above have balanced priorities within the NASA program, as determined by Science Definition Team
- Over India, applications objectives are of prime importance

Instrument Overview

- Side looking L-band Synthetic Aperture Radar
- Fully polarimetric for classification and Biomass
- Repeat pass interferometer for deformation
- Split Spectrum for Ionosphere mitigation
- Multi-beam Array fed Reflector to achieve a 240 km swath
- PRF Dithering to fill transmit interference gaps
- Seamless mode transitions to minimize data loss

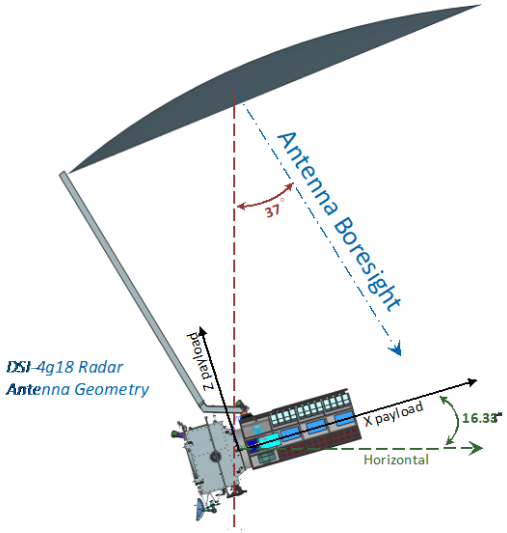

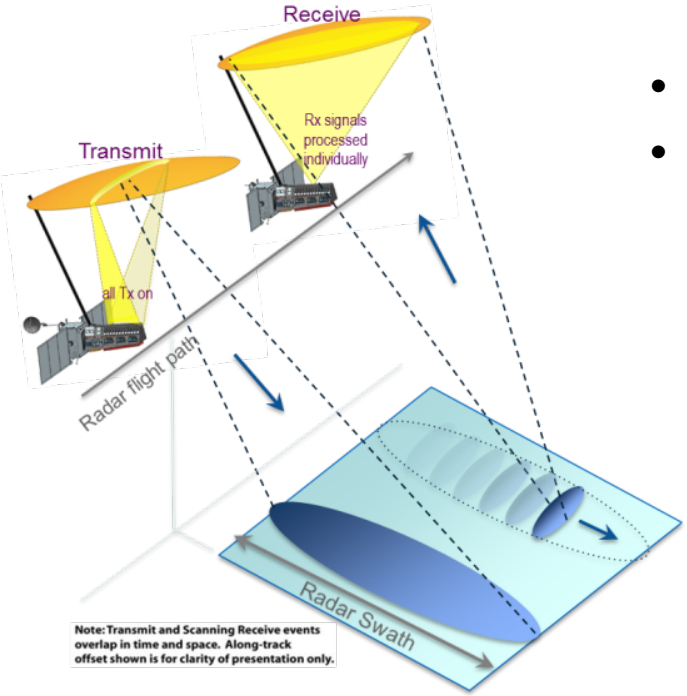

- On-board filtering and compression to reduce downlink
- SweepSAR timing and Digital Beam Forming to reduce ambiguities and preserve resolution / looks
  - On Transmit, illuminate the entire swath of interest
  - On Receive, steer the beam to follow the angle of the echo coming back to maximize the SNR of the signal and reject range ambiguities
  - Allow echo to span more than 1 IPP
  - 4 echoes are simultaneously returning to the radar from 4 different angles in 4 different groups of antenna beams

Complications of Observing a Wide Swath

- To achieve the desired coverage and frequency of observation, the NISAR L-band radar is required to have a swath width greater than >240k m for a 12 day repeat.
- Antenna length (12 meter) and S/C velocity (7.5 km/s in low Earth orbit) set the minimum acceptable pulse repetition frequency (PRF)
- Antenna gain, transmit power and backscatter strength limit maximum altitude
- With these constraints, the time required to receive a single echo can exceed the time between transmit pulses by over a factor of 3
- To resolve the echoes from multiple pulses, the L-SAR Instrument has adopted the SweepSAR technique

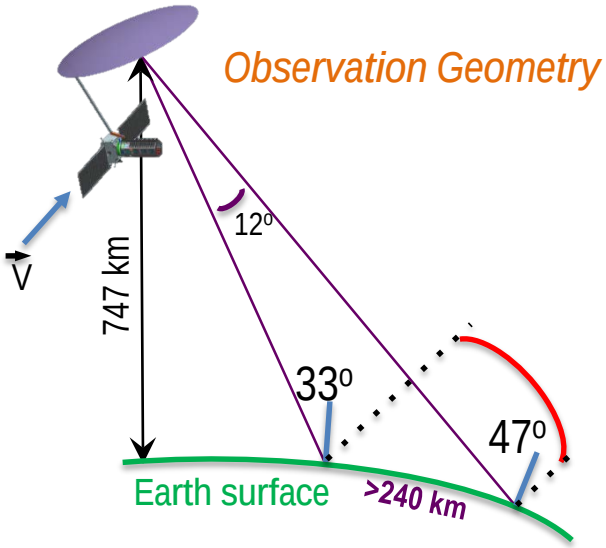

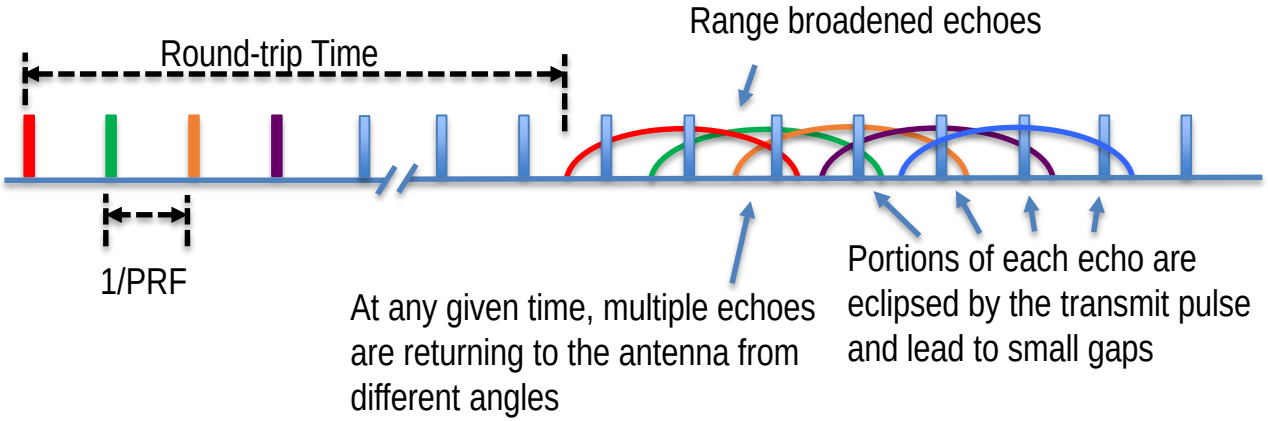

Wide Swath Coverage Achieved using SweepSAR

- The Basics
  - On Transmit, illuminate the entire swath of interest
  - On Receive, steer the beam in fast time to follow the angle of the echo coming back to maximize the SNR of the signal and reject range ambiguities
  - Allow echo to span more than 1 IPP
- Consequences
  - 4 echoes can be simultaneously returning to the radar from 4 different angles in 4 different groups of antenna beams
  - Each echo needs to be sampled, filtered, Beam-formed, further filtered, and compressed
  - On-Board processing is not reversible – Requires on-board calibration before data is combined to achieve optimum performance

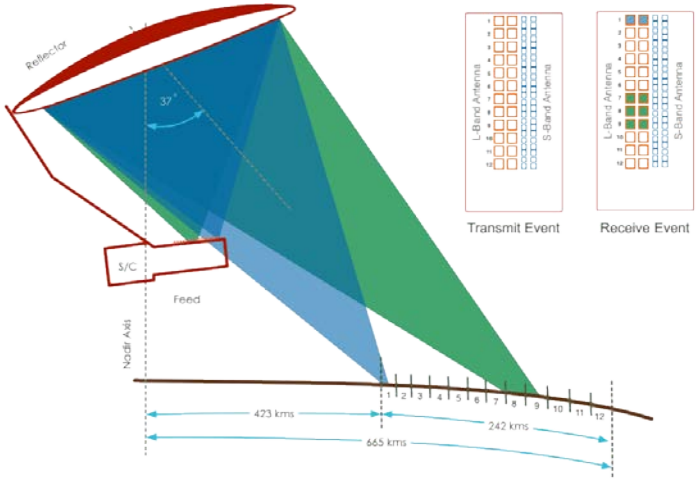

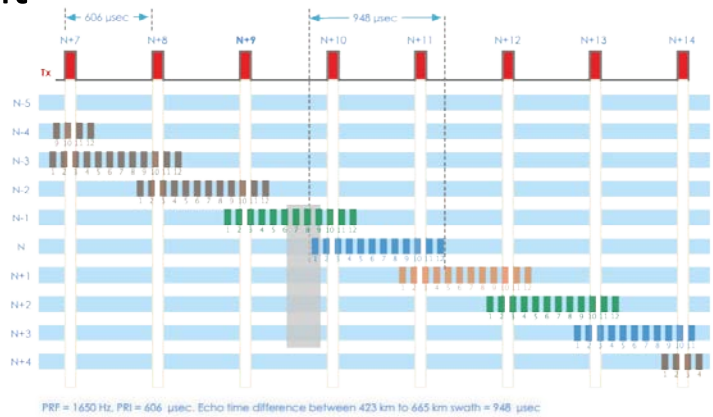

L-SAR Block Diagram

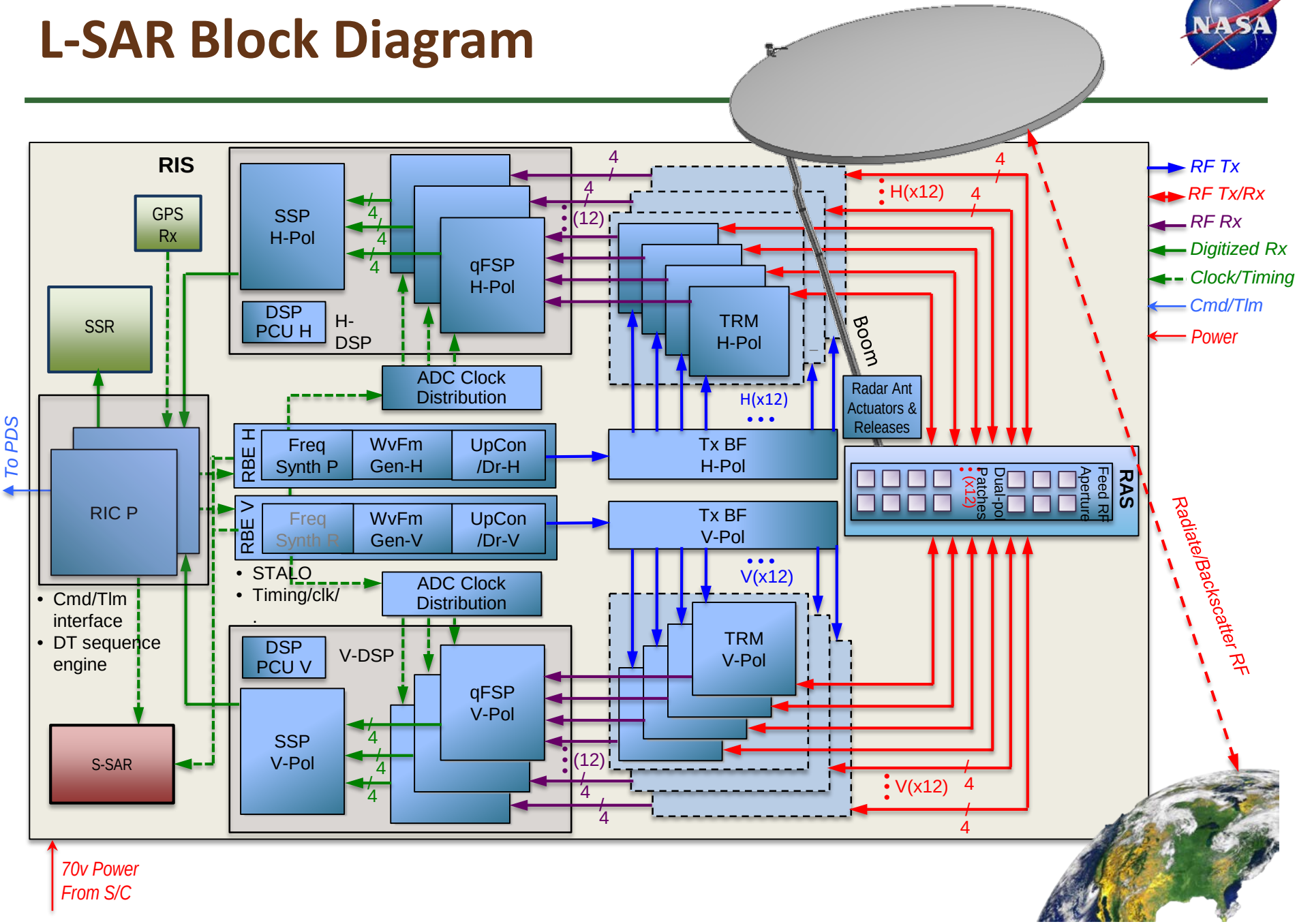

Radar Data Collection Overview

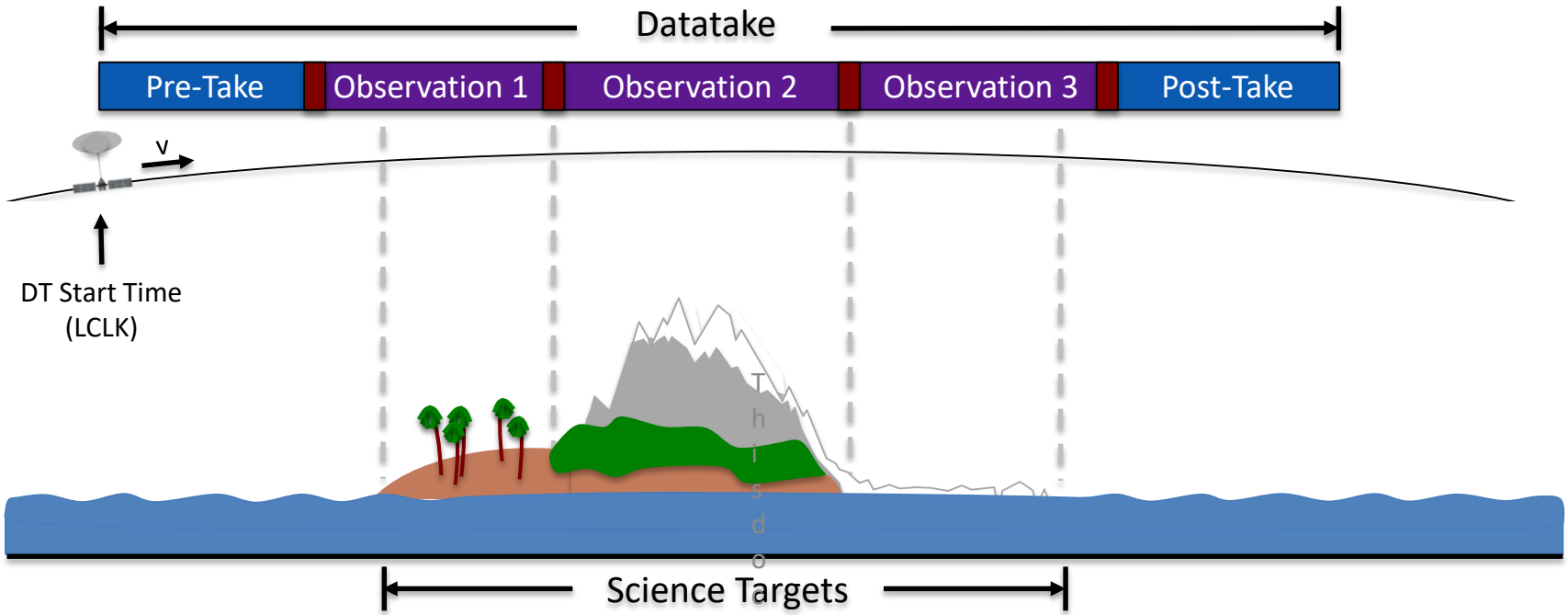

- The radar swath will frequently cross multiple science targets requiring different radar modes of operation
- The L-SAR radar is designed to transition seamlessly between mode combinations with no loss to science data at the mode changes
- L-SAR pulse count set to 1 at DT Start, increments uniformly throughout the entire datatake
- Minimum duration of any science observation is 2 seconds (L-SAR Synth aperture time: 2.7s)
- Pre- and Post-Take data are only collected at the very begin and end of the sequence of observations

This document contains

NISAR L-band Instrument Data Collection Commanding

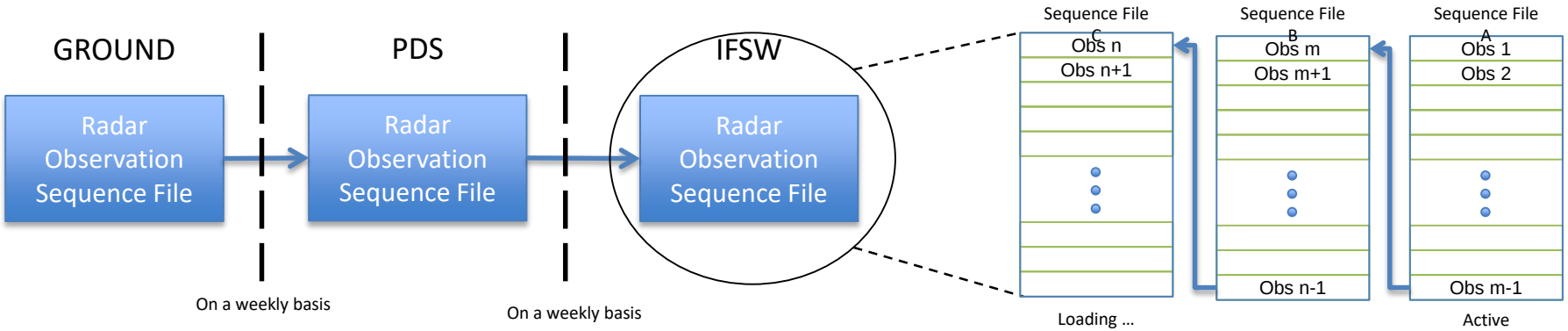

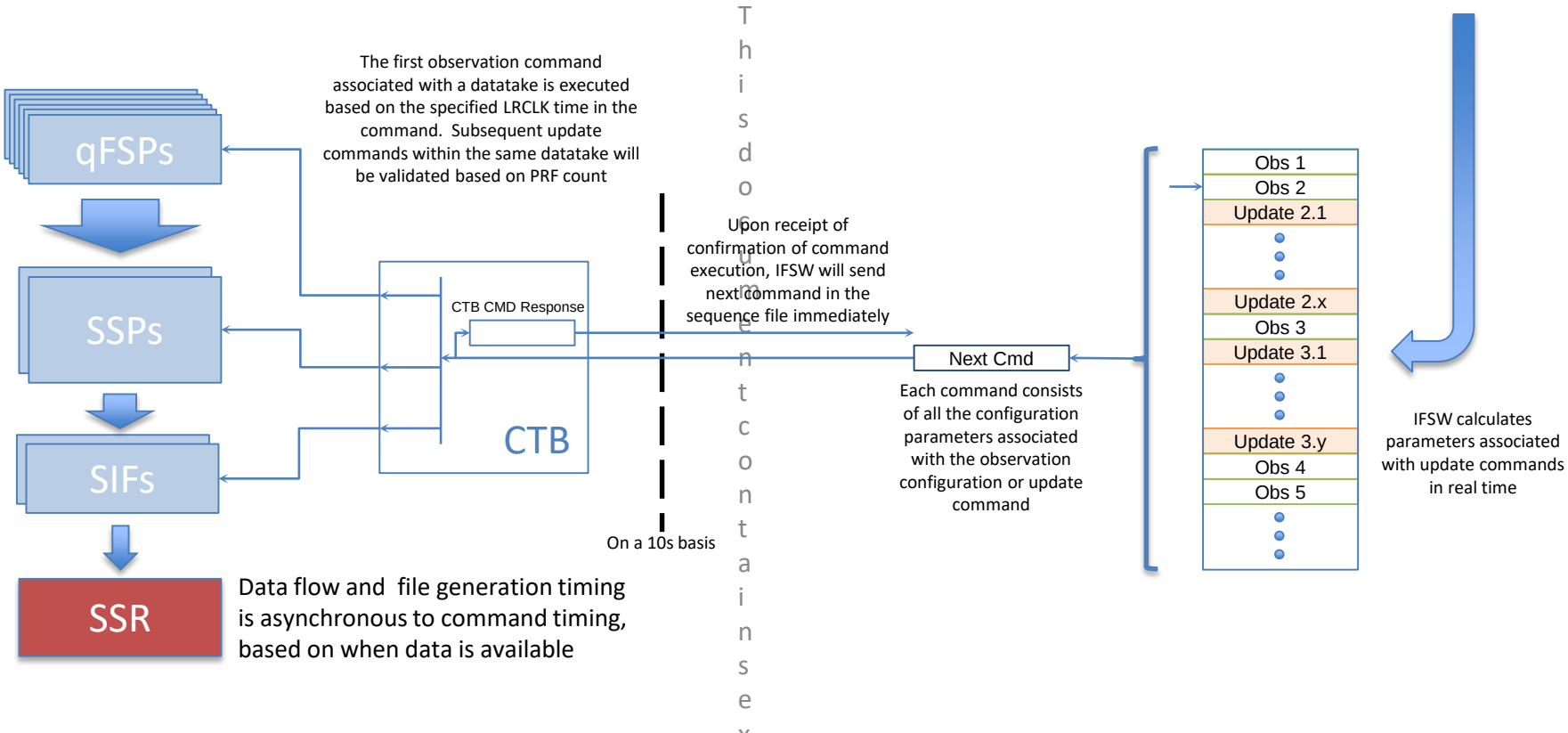

DSP Overview

- Digital signal processing techniques implemented in 3 stages compress science data to a format and data rate that meets requirements and telecomm subsystem constraints
- Processing includes Receive Digital Beamforming, Digital Filtering, and Calibration
- Programmable built-in calibration modes allow for radar performance optimization

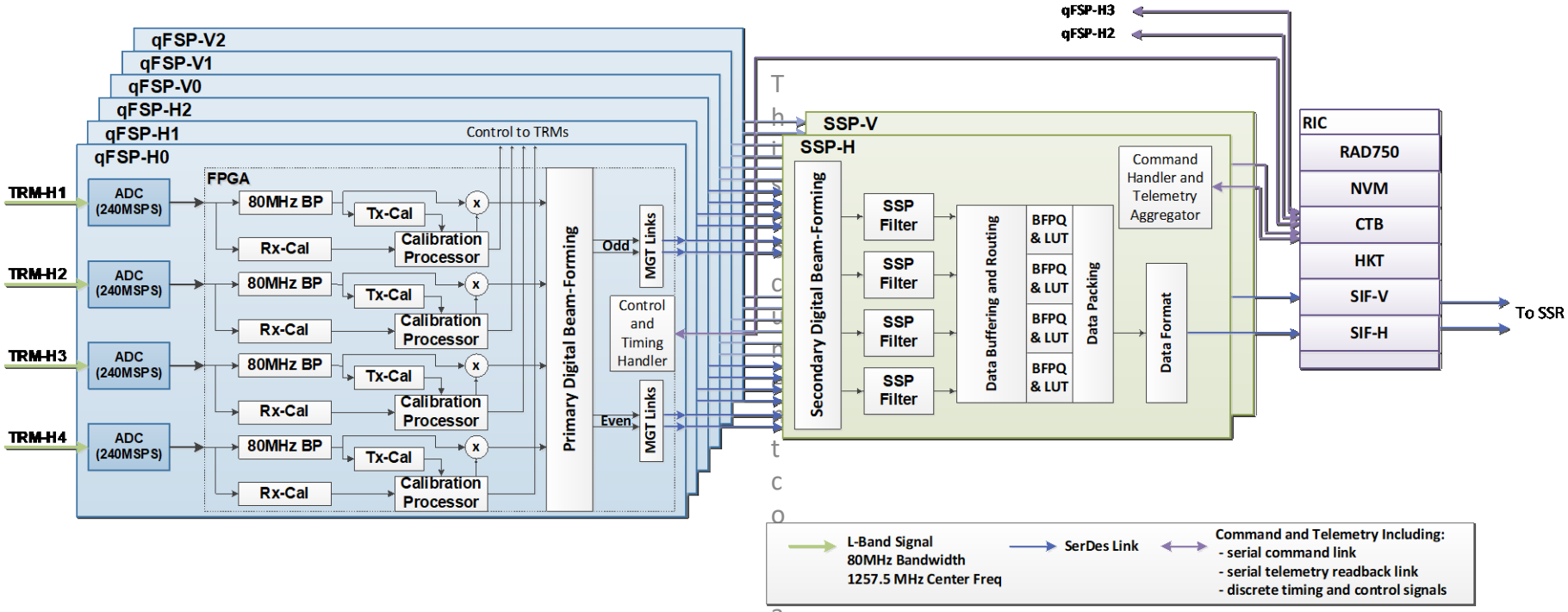

This document contains

Overall Timing Strategy

- The CTB will keep a 10MHz counter called the LRCLK that will serve as the master instrument clock
  - The LRCLK will be reset once at the beginning of the mission and maintained as a constant radar time base
  - All radar timing events will be uniquely timetagged with an LRCLK value
  - The LRCLK will be correlated with GPS Time to provide knowledge of the relationship between the radar time paradigm and an external time reference
- During datatake operations the Radar Timing Reference and its derivative signals are distributed throughout the system for timing and synchronization
  - Receive timing is referenced to the PRF signal that triggered the transmit of the signal being received

Summary
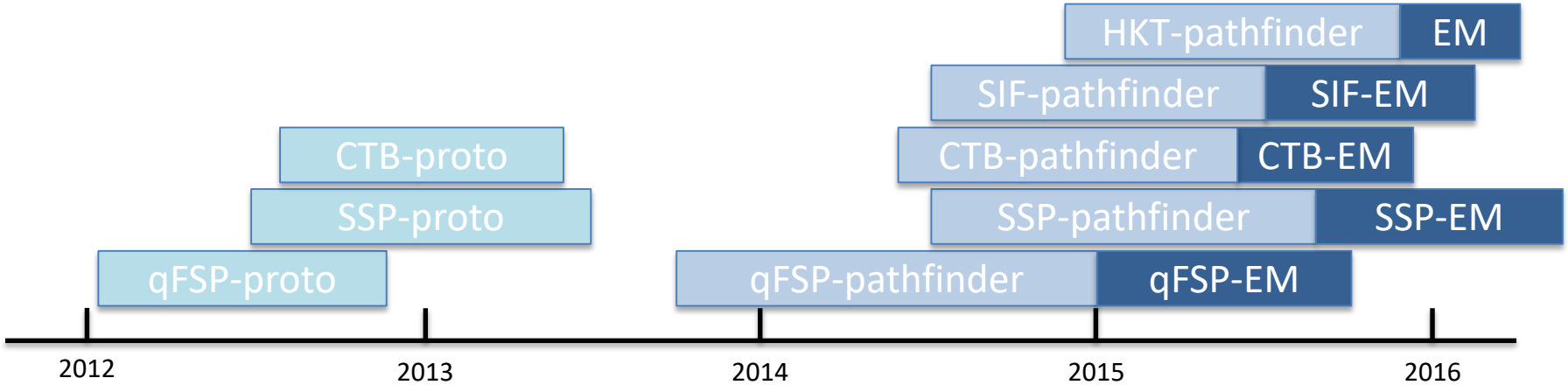
- The NISAR Digital Electronics Subsystem is a fully developed digital system implementing the SweepSAR technique to achieve high resolution wide-swath
- The Engineering Models of all the units in the subsystem have been built and are being tested
- Significant testing including firmware algorithms and prototype hardware testing have been completed
- Key system attributes such as control, timing, commanding and telemetry reporting to ensure the proper operation of the system has been developed