Evolution of the Mars Relay Network End-to-End Information System in the Mars Human Era (2016-2040)

Greg Kazz, Scott Burleigh, Kar-Ming Cheung, Biren Shah
Jet Propulsion Laboratory
California Institute of Technology

Space Ops Conference May 17, 2016
Dajeon, South Korea

Agenda

- Significance of End-to-End Information System
- Current vs. Future Mars Relay Comm. Architecture
- CCSDS Protocol Stack for Mars Relay Network
  - Emergence of CCSDS Unified Space Data Link Protocol
  - Role of CCSDS Delay Tolerant Networking
- Conclusions/Acknowledgments

Definition of EEIS

- An End-to-End Information System (EEIS) is the set of functions that are distributed across the flight, ground and launch systems, that interoperate cooperatively to acquire, store, transport, translate, integrate, and manage mission (e.g., science, engineering, radiometric, command, ancillary) information.
- These functions are performed cooperatively by flight and ground elements to manage, control and achieve mission objectives.
- An EEIS consists of hardware (e.g., computers and communications links), software, people, and procedures.
- The "ends of the EEIS" have varied from project to project but a common definition is that:
  - At one end is the on-board elements (instruments, subsystems, and/or sensors)
  - At the opposite end are the users (e.g., science and technology investigators, mission operators) of the mission information.
- The EEIS is an abstract system made concrete through a series of End-to-End information views: Connectivity, Protocol, Enterprise, Scheme, Functional, Physical Views

Mars Connectivity View – 2016

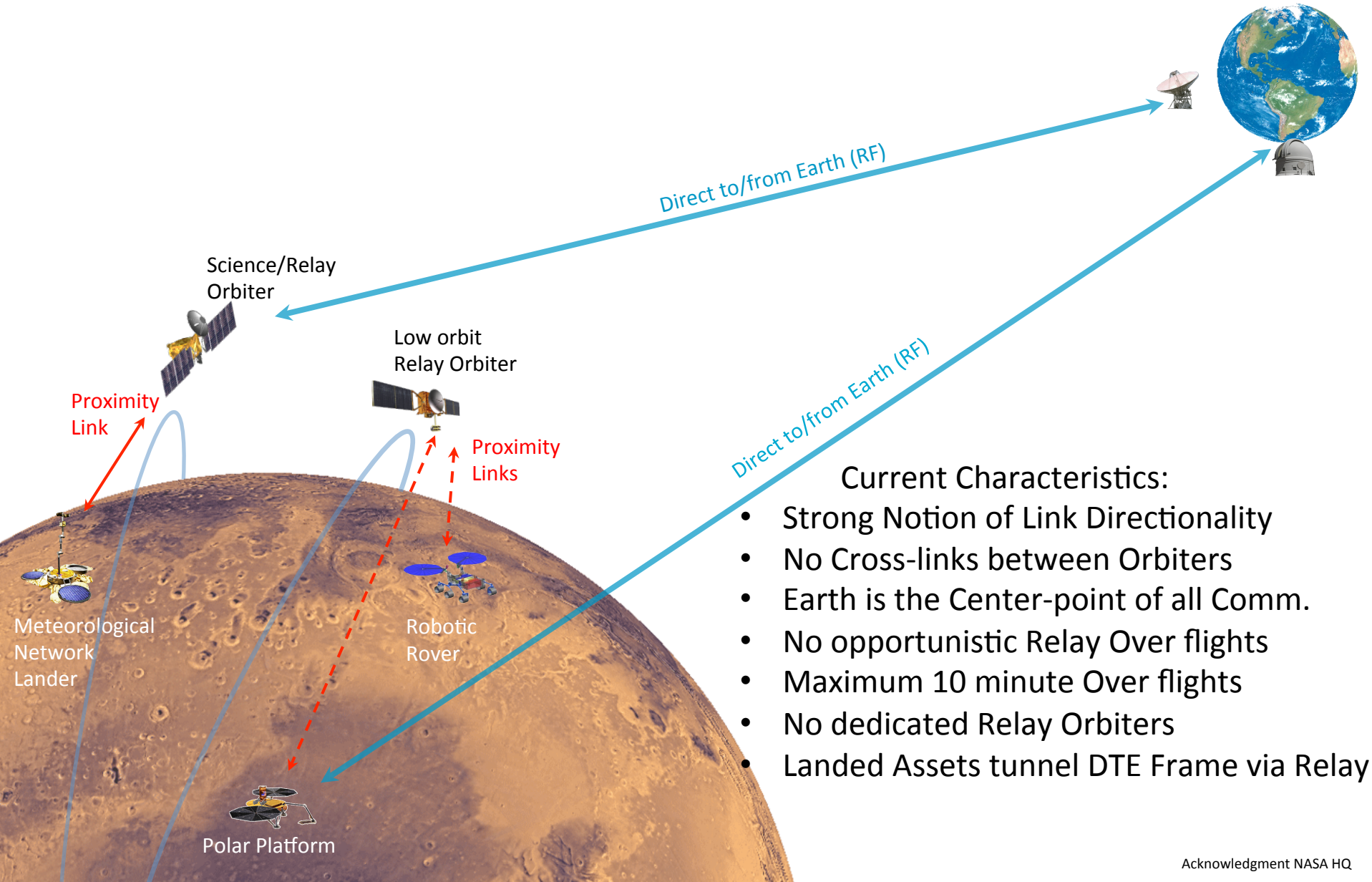

Current Characteristics:

- Strong Notion of Link Directionality
- No Cross-links between Orbiters
- Earth is the Center-point of all Comm.
- No opportunistic Relay Over flights
- Maximum 10 minute Over flights
- No dedicated Relay Orbiters
- Landed Assets tunnel DTE Frame via Relay

Acknowledgment NASA HQ

Mars Connectivity View – 2040

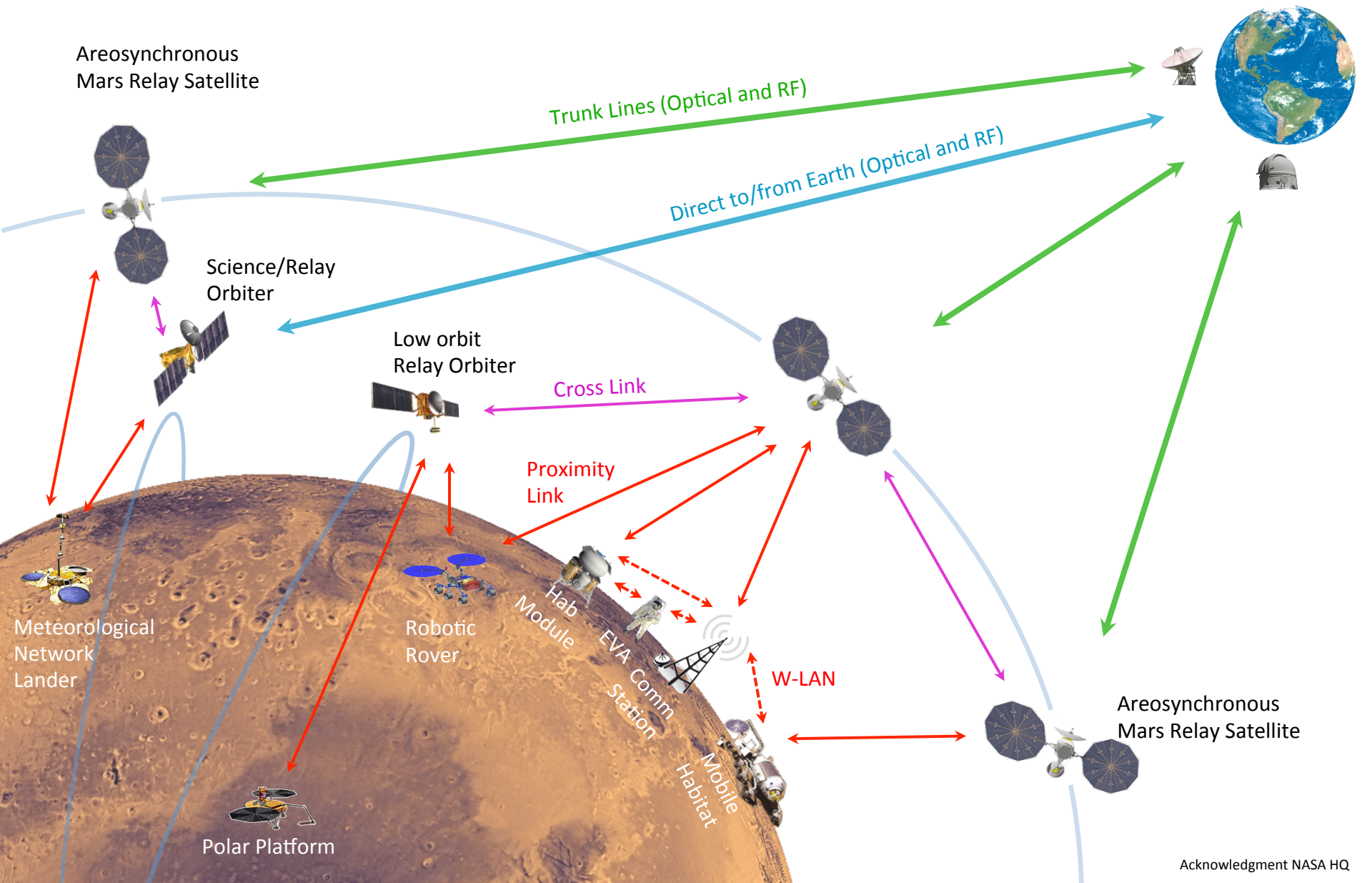

Acknowledgment NASA HQ

Current Mars Relay Comm Architecture

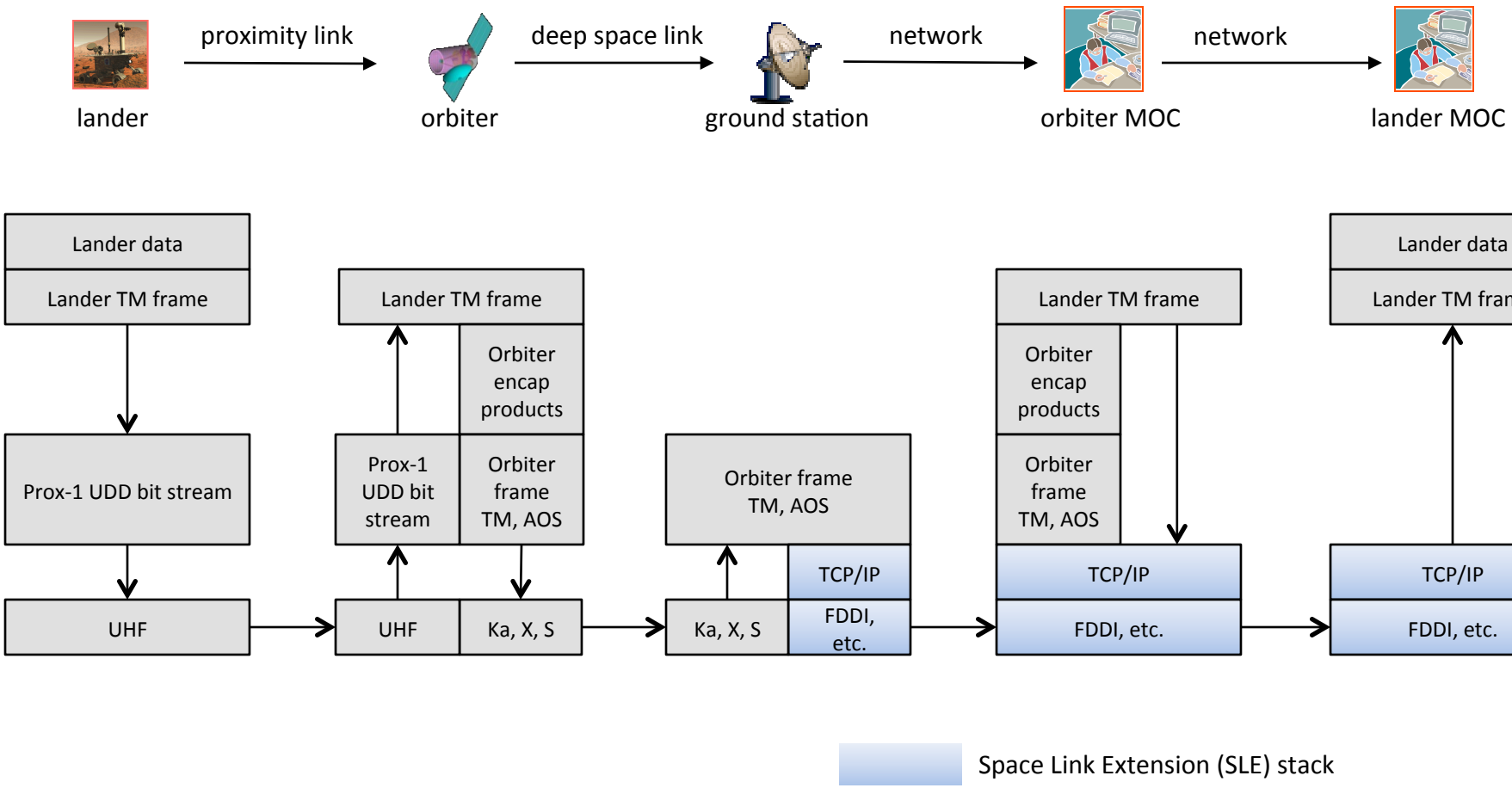

DTN in a Nutshell

- It's an overlay network.
  - DTN "bundle protocol" (BP) is to IP as IP is to Ethernet.
  - A TCP connection within an IP-based network may be one "link" of a DTN end-to-end data path; a deep-space R/F transmission may be another.
- Reliability is achieved by retransmission between relay points within the network, not end-to-end retransmission.
- Route computation may have temporal as well as topological elements, e.g., a schedule of planned contacts.
- Forwarding at router is automatic but not necessarily immediate: store-and-forward rather than "bent pipe".
- Security was built in from the start:
  - Both the integrity and confidentiality of data (both science and engineering) can be protected.
  - Data authentication limits the effect of DOS attacks.

Automatic Relay

- The DTN architecture enables deployment of a true network over interplanetary radio links.
  - **Forwarding** of received data toward its final destination is automatic, regardless of the number of data sources, data destinations, and forwarding nodes. Multiplexing and de-multiplexing are automatic.
  - **Storage** of outbound data pending the next communication opportunity is managed automatically.
  - **Buffer space** is allocated and recycled automatically.
  - **Connections** between nodes are initiated and terminated automatically.
  - **Data rates** over links are managed automatically.
  - **Lost or corrupted data** are retransmitted automatically.
- While adding new nodes to a network may increase its topological complexity, traffic, transmission errors, etc. exponentially, the increase in management effort is linear or less.

What's Different ?

- DTN bundles, rather than lander transfer frames, are the common end-to-end medium of data transport.
  - Non-standard orbiter encapsulation products are not used.
  - Because DTN is internationally standardized, the topology works in the same way regardless of which agencies own the lander, orbiter, and ground station.
  - The same topology also works in exactly the same way for uplink as for downlink. USLP is the same space data link layer protocol across all links.
- Data Products, rather than transport artifacts (frames, packets, bit streams) are the common end-to-end medium of data management.
  - Meaningful to the end user along with associated meta data about the product
  - Reduces set of managed items to a reasonable number not thousands of individual transport parts
- Because a bundle is a network data item, it can be forwarded from the ground station directly to any point in the terrestrial network.
- Retransmission of lost or corrupt data is handled automatically by Licklider Transmission Protocol (LTP).
- Release of transmitted data products on the lander and on the orbiter is handled automatically by Bundle Protocol (BP).
- End-to-end security (confidentiality, integrity, authentication) is provided as needed.

DTN-based Mars Relay Architecture

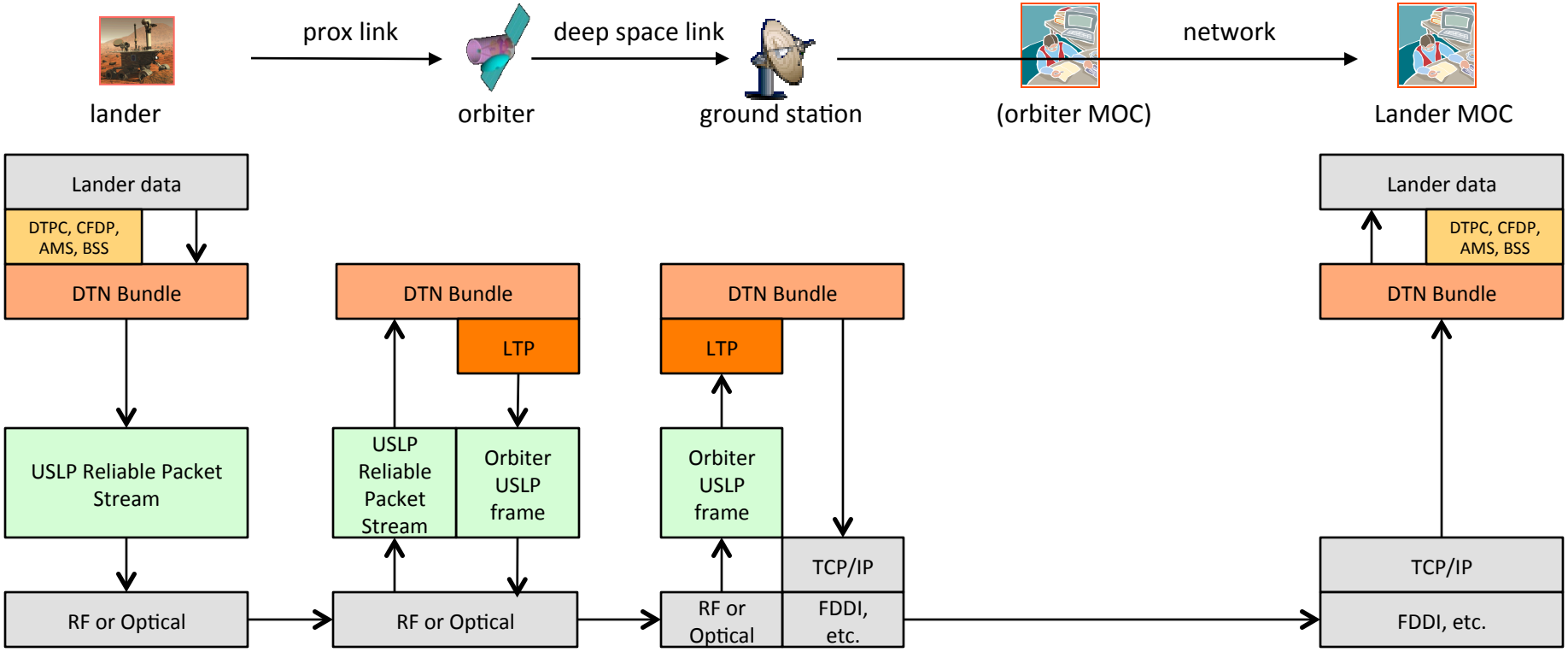

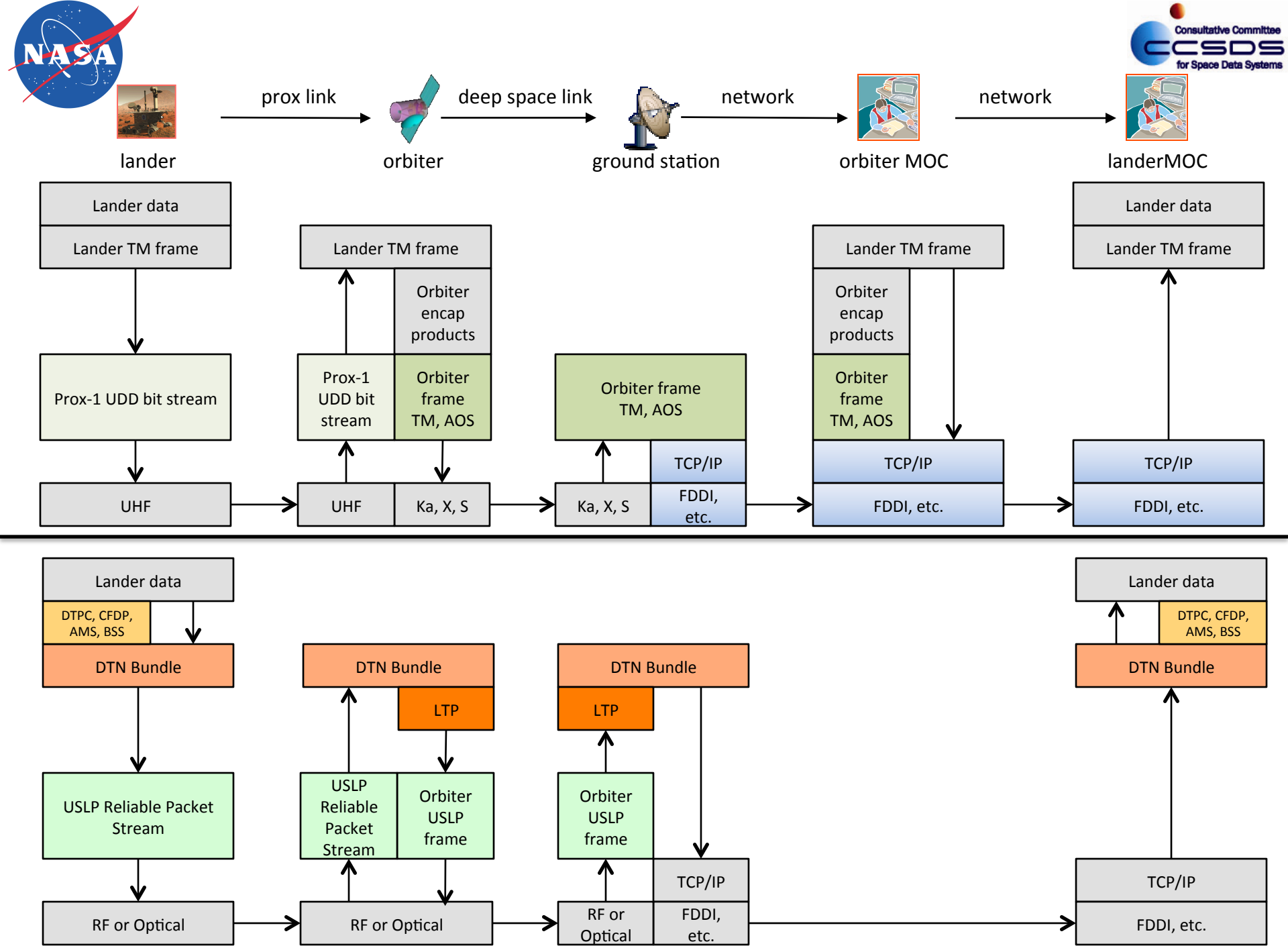
prox link
deep space link
network
network
lander
orbiter
ground station
orbiter MOC
landerMOC
Lander data
Lander TM frame
Prox-1 UDD bit stream
UHF
Lander TM frame
Orbiter encap products
Prox-1 UDD bit stream
Orbiter frame TM, AOS
UHF
Ka, X, S
Orbiter frame TM, AOS
TCP/IP
Ka, X, S
FDDI, etc.
Lander TM frame
Orbiter encap products
Orbiter frame TM, AOS
TCP/IP
FDDI, etc.
Lander data
Lander TM frame
TCP/IP
FDDI, etc.
Lander data
DTPC, CFDP, AMS, BSS
DTN Bundle
USLP Reliable Packet Stream
RF or Optical
DTN Bundle
LTP
USLP Reliable Packet Stream
Orbiter USLP frame
RF or Optical
DTN Bundle
LTP
Orbiter USLP frame
TCP/IP
RF or Optical
FDDI, etc.
Lander data
DTPC, CFDP, AMS, BSS
DTN Bundle
TCP/IP
FDDI, etc.

CCSDS Unified Space Link Protocol (USLP)

Features	Benefits
Provides a single link protocol used by flight and ground across all manned and robotic space links	• Scaleable to large and diverse set of missions from ISS to Cubesats; • Once implemented, reduces future deployment & testing from 4 to 1 link layer protocol
Use of Variable Length Frame on all links decouples the link framing from the channel coding	• Use Variable Length Frames on Telemetry Links
Expands the number of Spacecraft CCSDS must identify	• Existing name space is 75% full • Expectation is current ID space will run out in the next 5-10 years due to small sat growth and slow attrition • Expands to 16384 Spacecraft IDs
Allows *direct* data delivery of upper layer protocol data units (PDUs)	• Currently, CCSDS Space/ Encapsulation Packet required to contain other PDUs • USLP is more efficient using direct insertion requiring no encapsulation of IP Datagrams or DTN bundles

Future Mars Relay Protocol Stack

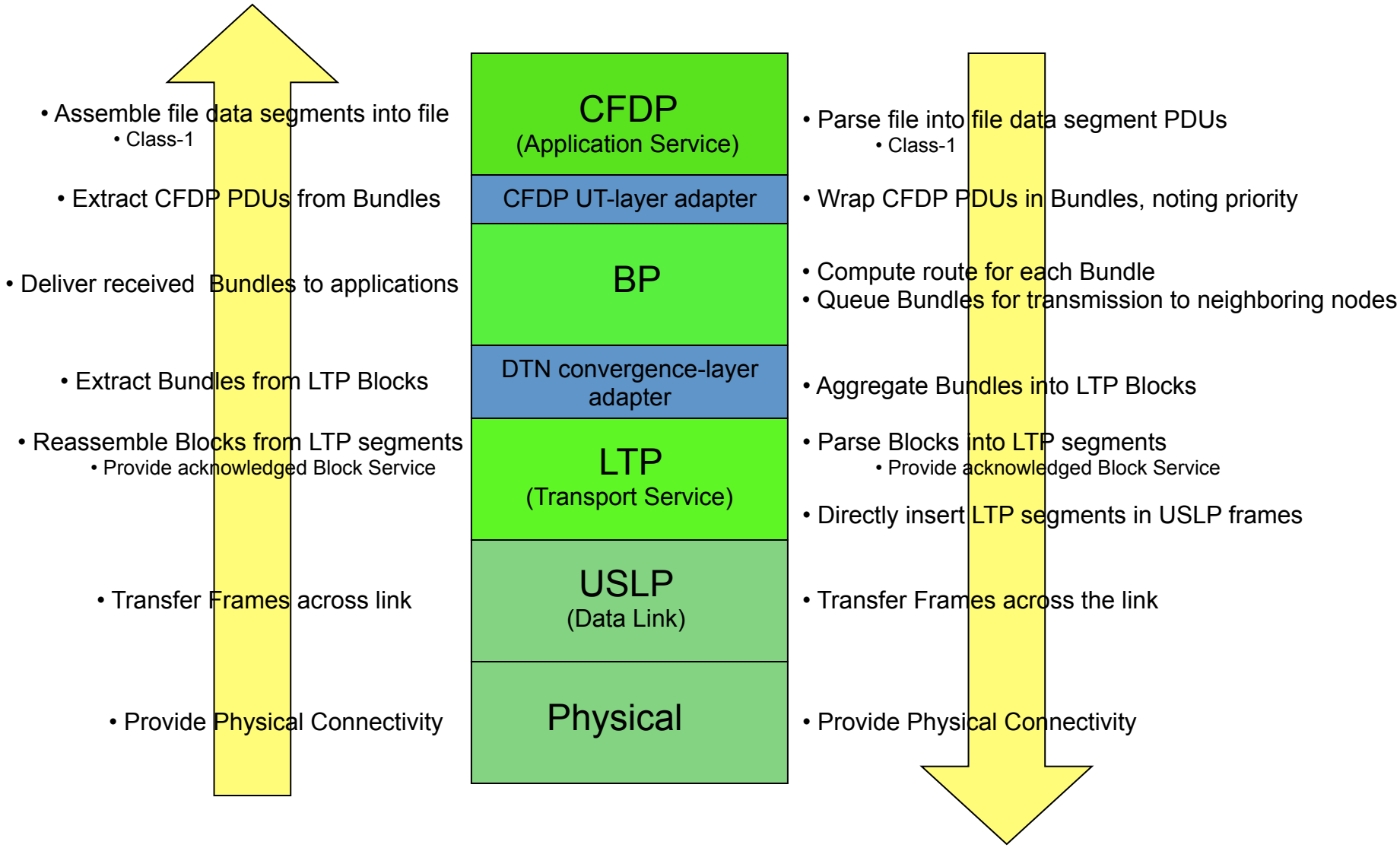

Conclusions

- By comparing the current vs. the potential future EEIS views of the MRN, we see an enormous increase in connectivity at Mars in only 15 to 25 years.
- All of the CCSDS protocols supporting this connectivity view are either currently ISO CCSDS standards today e.g., BP, LTP, CFDP or they are well into development e.g., DTN, USLP.
- Given the 3 to 5 year average CCSDS standard development time from beginning (white book) to end (blue book), we can safely estimate that the entire protocol suite will be available and compatibility tested well before the need.
- Therefore the good news from a technology point of view is that the international space agencies providing resources in the Mars Human Era will be able to base their EEIS architecture on tested and proven CCSDS standards.

Acknowledgements

- The work described in this paper was performed at the Jet Propulsion Laboratory, California Institute of Technology und a contract with the National Aeronautics and Space Administration.
- The authors thankfully acknowledge the collaboration of Wallace Tai and Peter Shames NASA/JPL towards the development of future CCSDS emerging standards.