# Screening of Supercapacitor Cells and Battery/Supercapacitor Hybrid Systems under Thermal Vacuum Conditions

Keith B. Chin, Erik J. Brandon*, Marshall C. Smart, Nelson W. Green, Naomi K. Palmer, Gary S. Bolotin and Douglas J. Sheldon

**Electrochemical Technologies Group**
Jet Propulsion Laboratory, California Institute of Technology
4800 Oak Grove Drive, Pasadena, CA 91109
*erik.j.brandon@jpl.nasa.gov

**Space Power Workshop**
Manahattan Beach, CA
Wednesday, April 20, 2016

© 2016 California Institute of Technology. Government sponsorship acknowledged

# NASA Applications of Supercapacitors

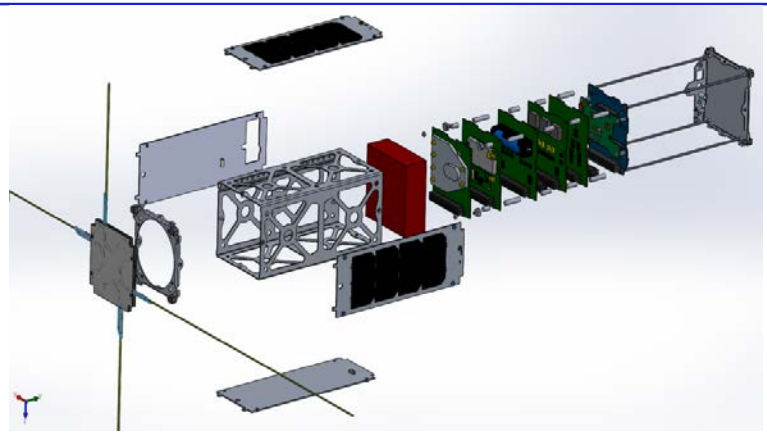

**2U CubeSat Bus**

**Hybrid Energy Storage Flight Module**

- Planned flight of hybrid energy storage payload on 2U CubeSat
- JPL/Cal State University Northridge collaboration
- Low temperature Li-ion battery and supercapacitor hybrid energy storage system (-40°C)
- Earth orbiting mission
- Enabling for future deep space missions that require lower temperature capability

# Hybrid Module Supports Pulse Power at Low Temperatures

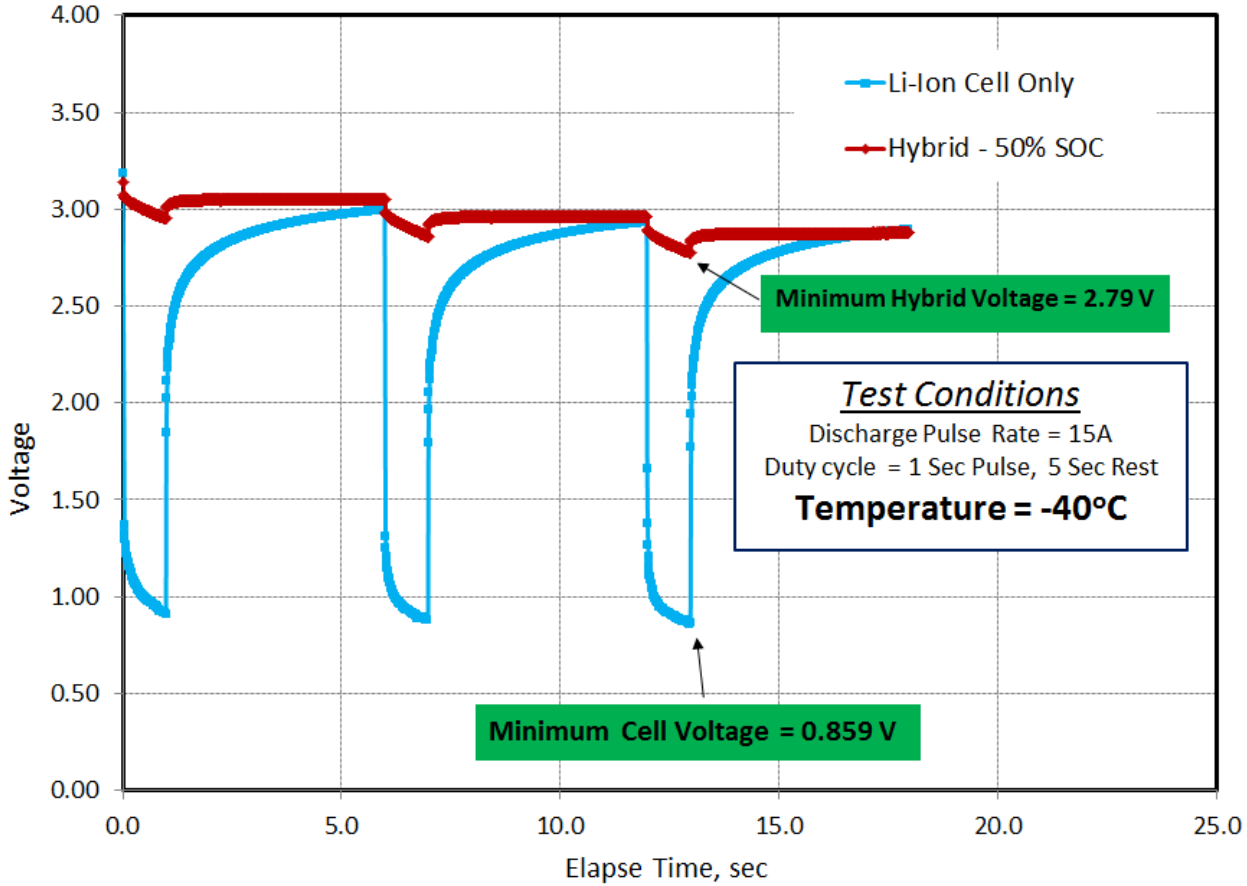


**High rate pulse testing comparing the standalone Li-ion cell vs. hybrid module at -40°C (Discharge rate = 15A, Duty cycle = 20%)**

# Objectives of Study

- **Perform rapid hermeticity screening of representative supercapacitor cells**

- **Evaluate under thermal-vacuum conditions**
  - Between -40ºC and +60ºC
  - ~$1 \times 10^{-5}$ Torr

- **Downselect cell options for further evaluation**

- **Create NASA database of parts performance**

# Cells Screened

| Vendor | Capacitance (Farads) | Voltage (V) | ESR (mΩ) | Package Type | Termination/ Terminal Type | Temperature Range (ºC) |
|---|---|---|---|---|---|---|
| Nesscap | 100 | 2.7 | 10 | Radial | Through Hole | -40 to +50 |
| Ioxus | 350 | 2.7 | 32 | Radial | Snap-In | -40 to +65 |
| Kemet | 350 | 2.7 | 31 | Radial | Through Hole | -40 to +65 |

**Nesscap**
Ø = 22 mm
L = 47 mm

**Ioxus**
Ø = 35 mm
L = 58 mm

**Kemet**
Ø = 35 mm
L = 61 mm

# Small TVAC Chamber

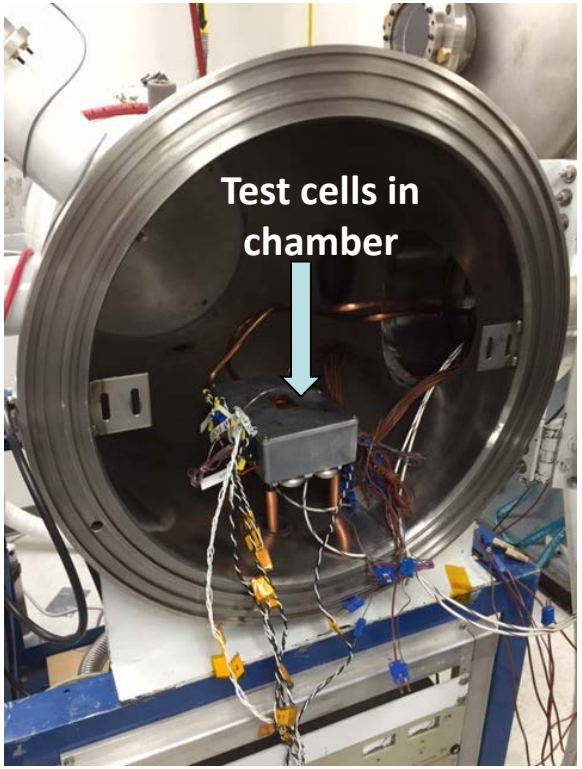


**Test chamber used for cell evaluation**

# Test Configuration

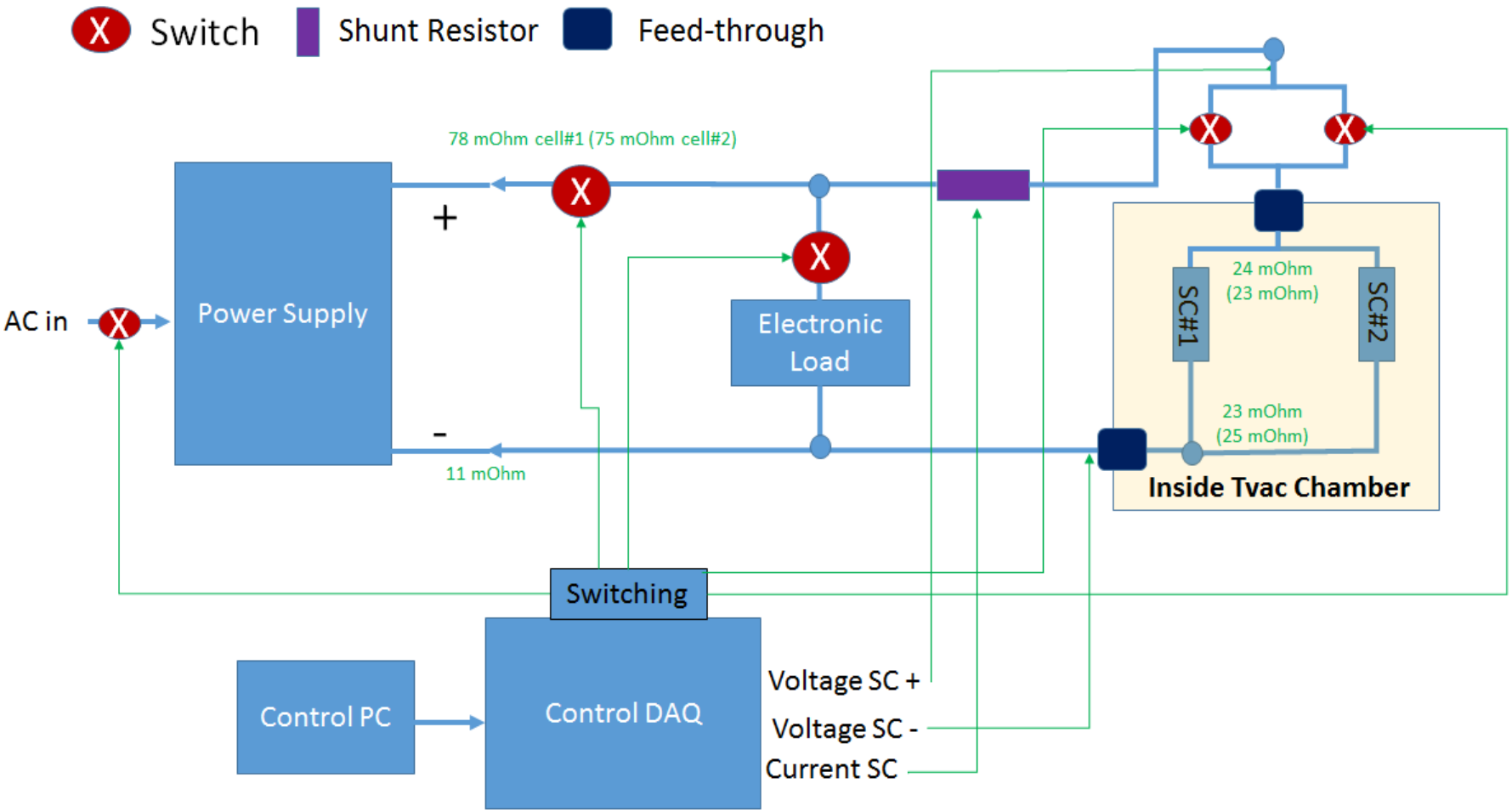

# Example Test Plan

## ~ $10^{-5}$ torr vacuum level

**Step 1: 4 Cycles at T = 20°C (2.7 V to 0.5 V at 1 A)**

**Step 2: Ramp temperature up to T = 60°C and dwell at least 1 h**

**Step 3: 3 Cycles at T = 60°C (2.7 V to 0.5 V at 1 A)**

**Step 4: Ramp temperature down to T = -40°C and dwell at least 1 h**

**Step 5: 3 Cycles at T = -40°C (2.7 V to 0.5 V at 1 A)**

**Step 6: Ramp temperature up to T = 20°C and dwell at least 1 h**

**Step 7: 4 Cycles at T = 20°C (2.7 V to 0.5 V at 1 A)**

# Step 1: 4 Cycles at 20°C

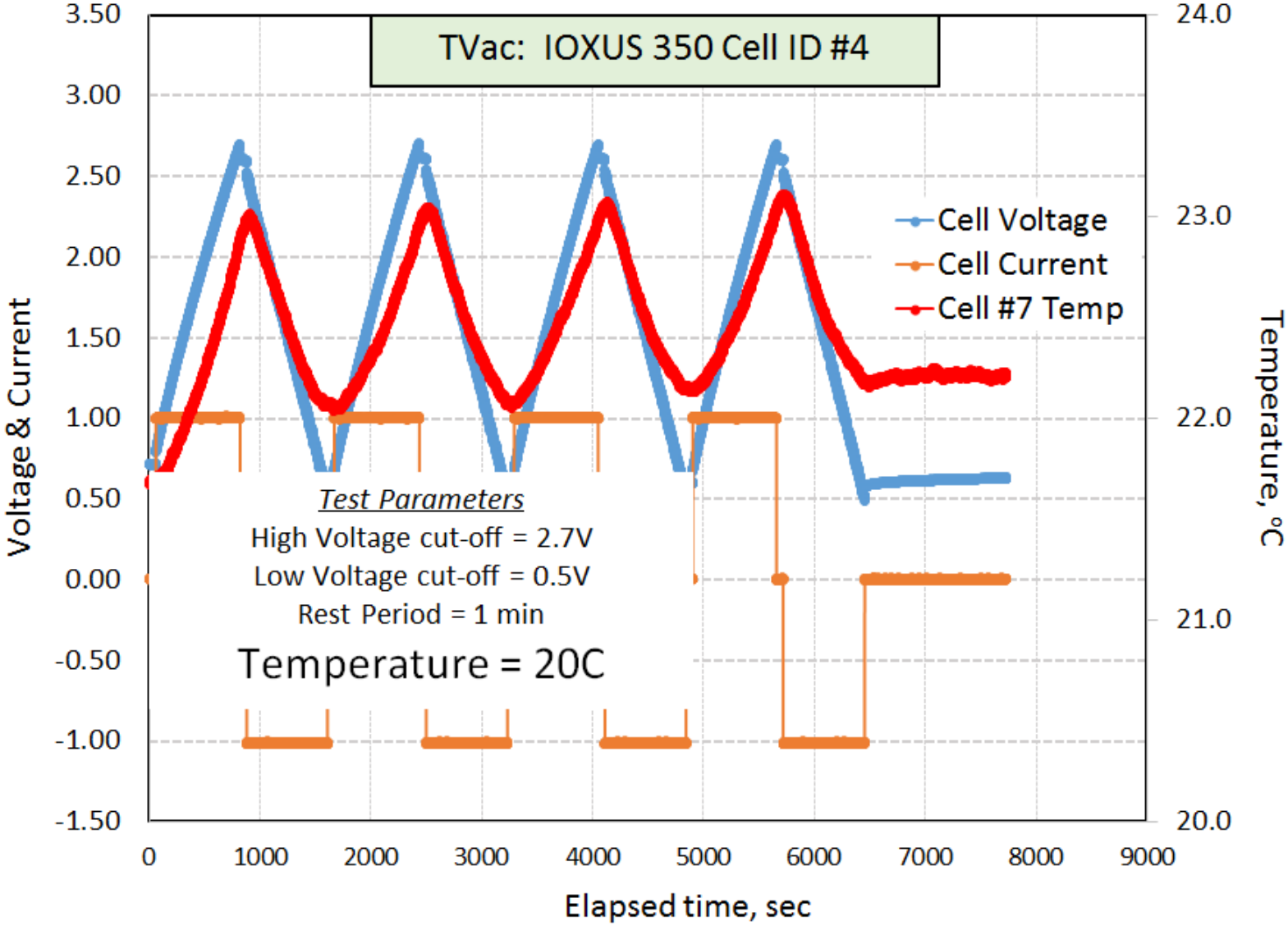

# Step 2: Thermal & Pressure Profile from 20°C to 60°C

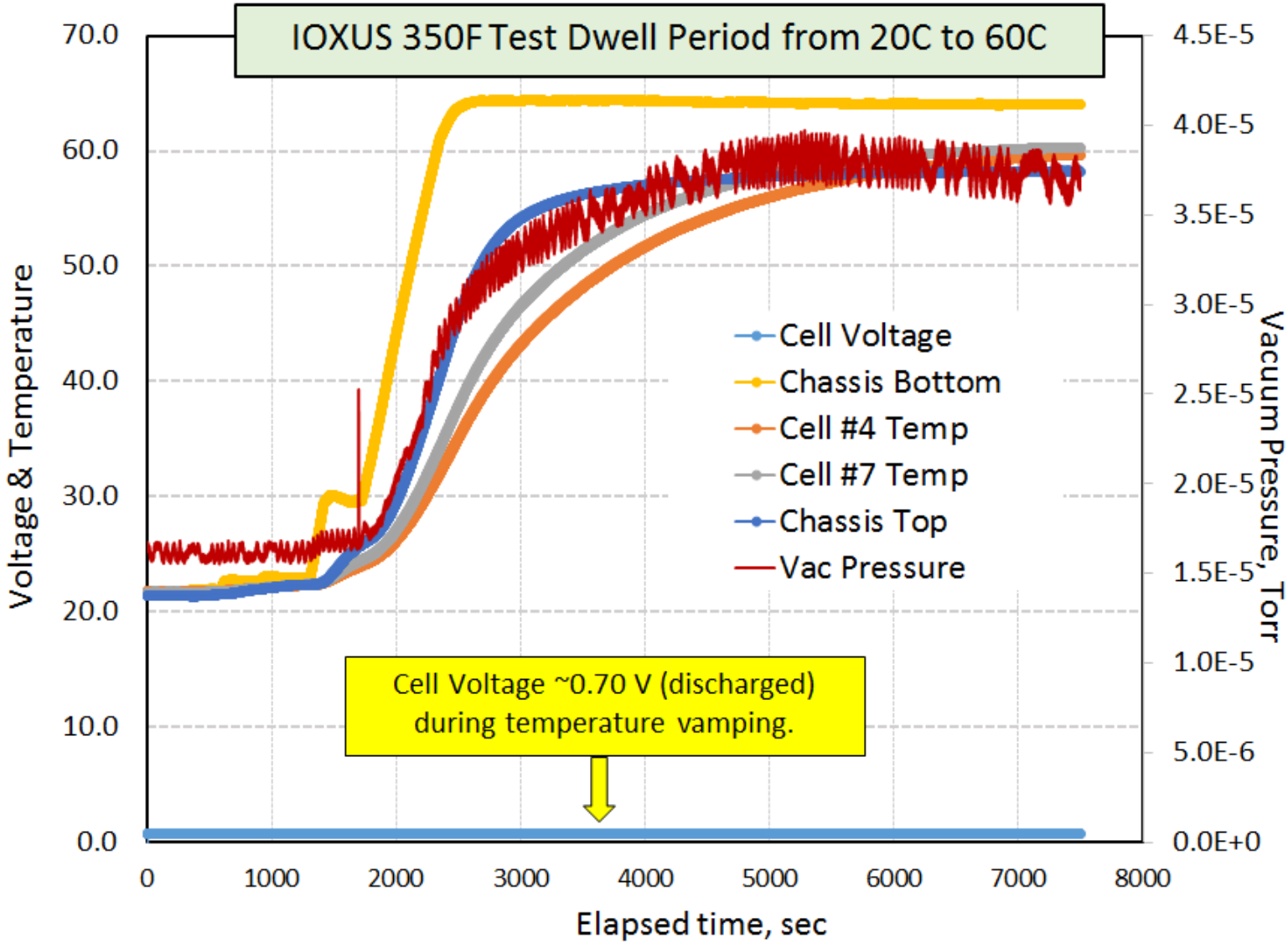

# Step 3: 3 Cycles at 60°C

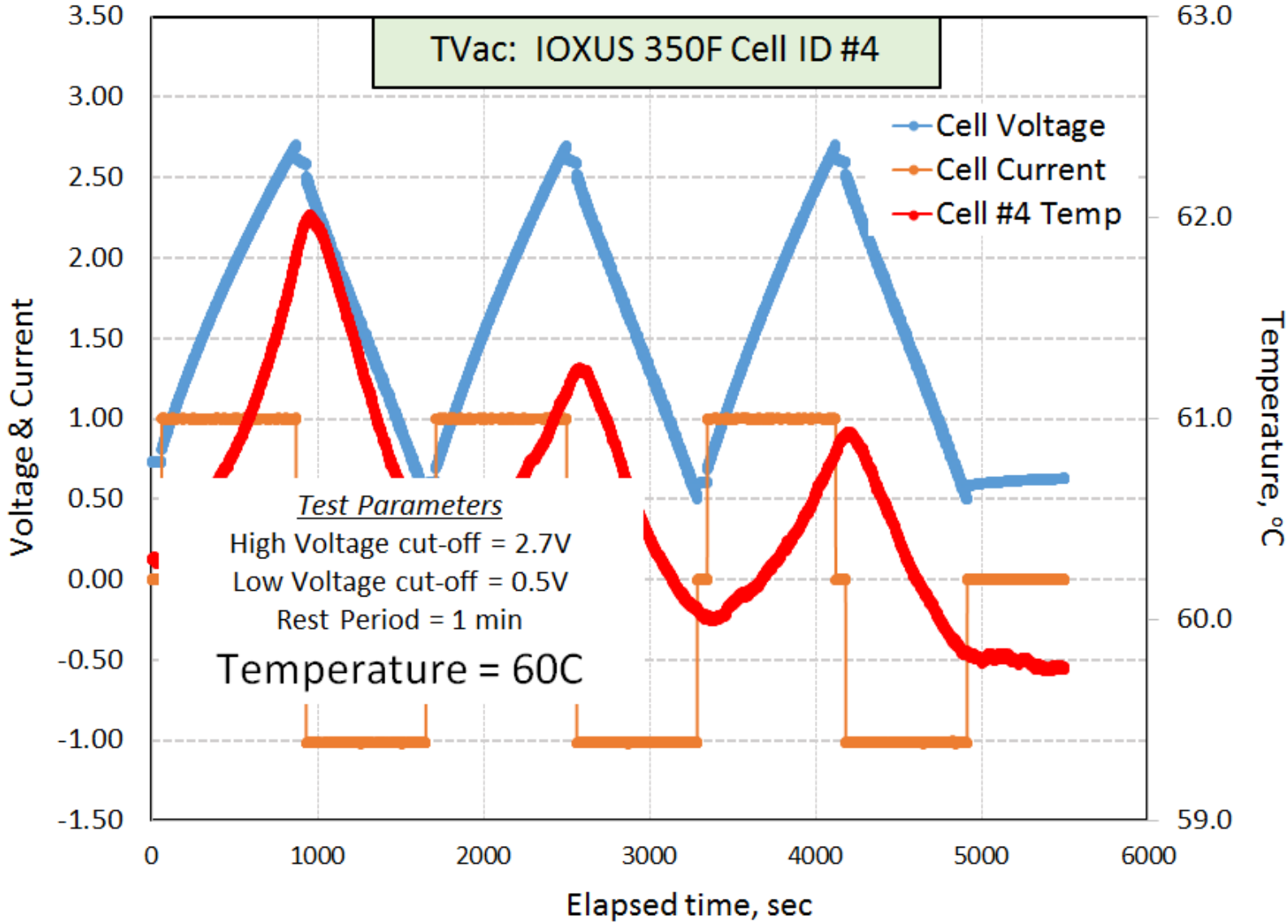

# Step 4: Thermal & Pressure Profile from 20°C to -40°C

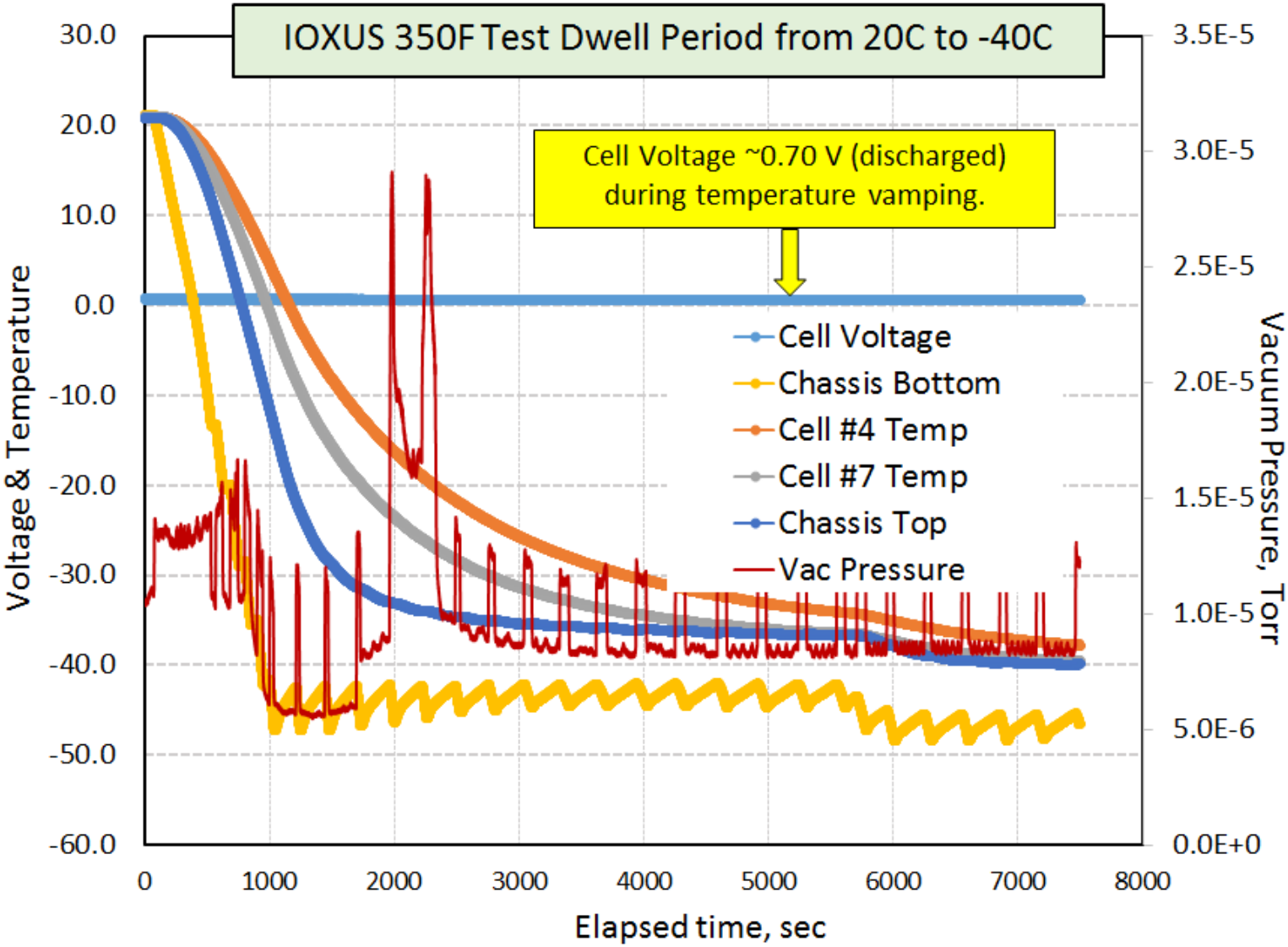

# Step 5: 3 Cycles at -40°C

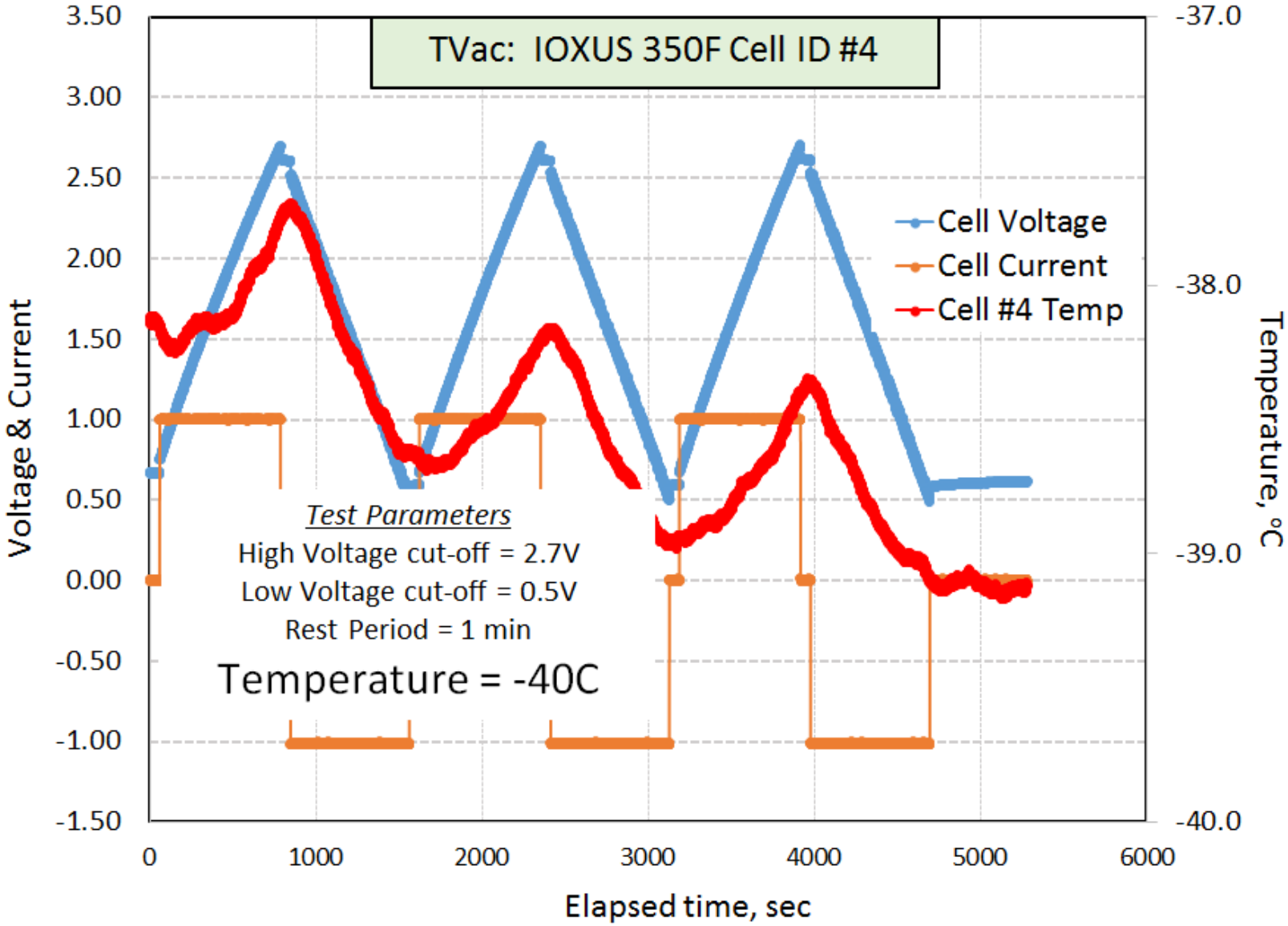

# Step 6: Thermal & Pressure Profile from -40°C to 20°C

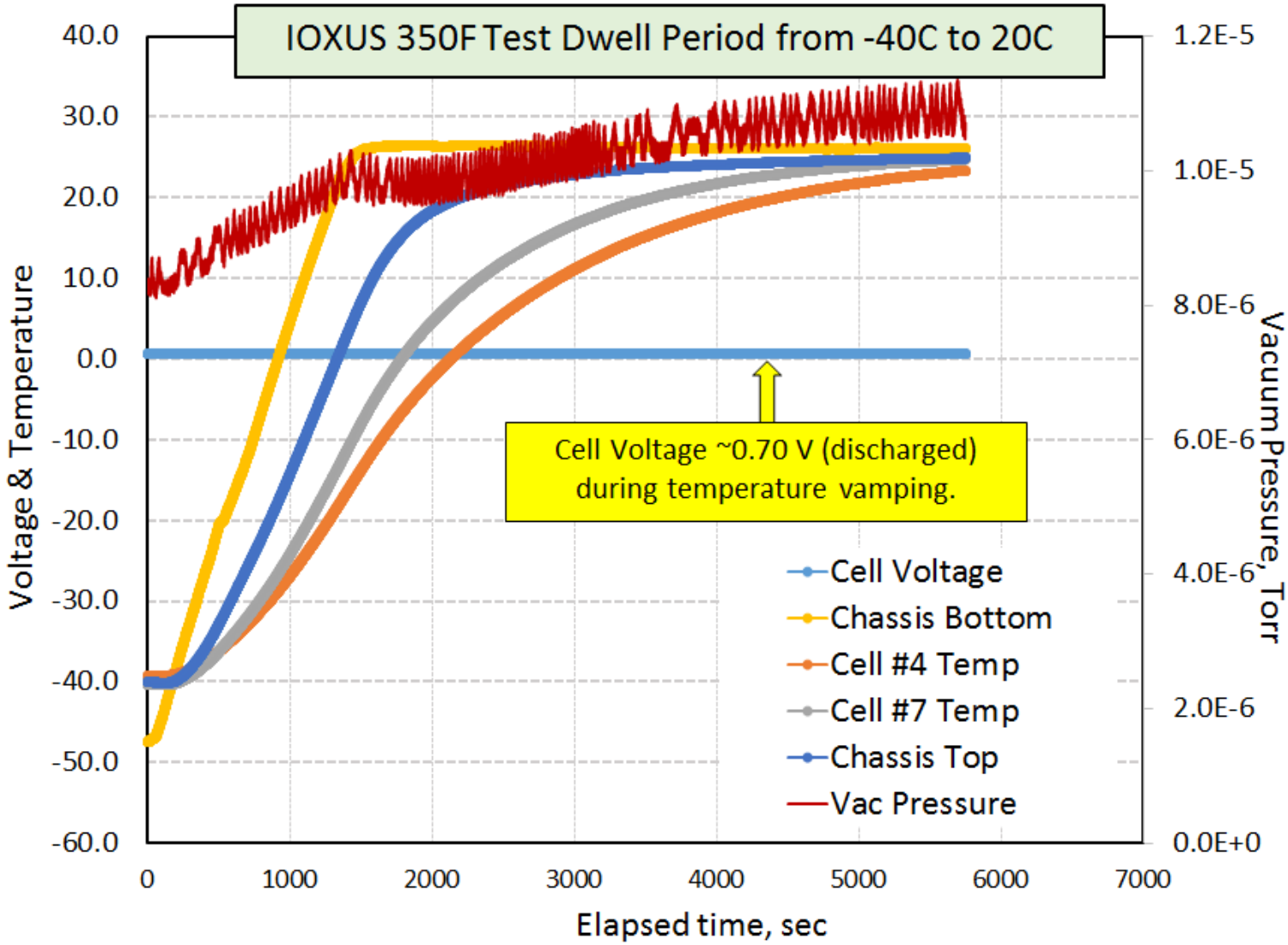

# Step 7: 4 Cycles at 20°C

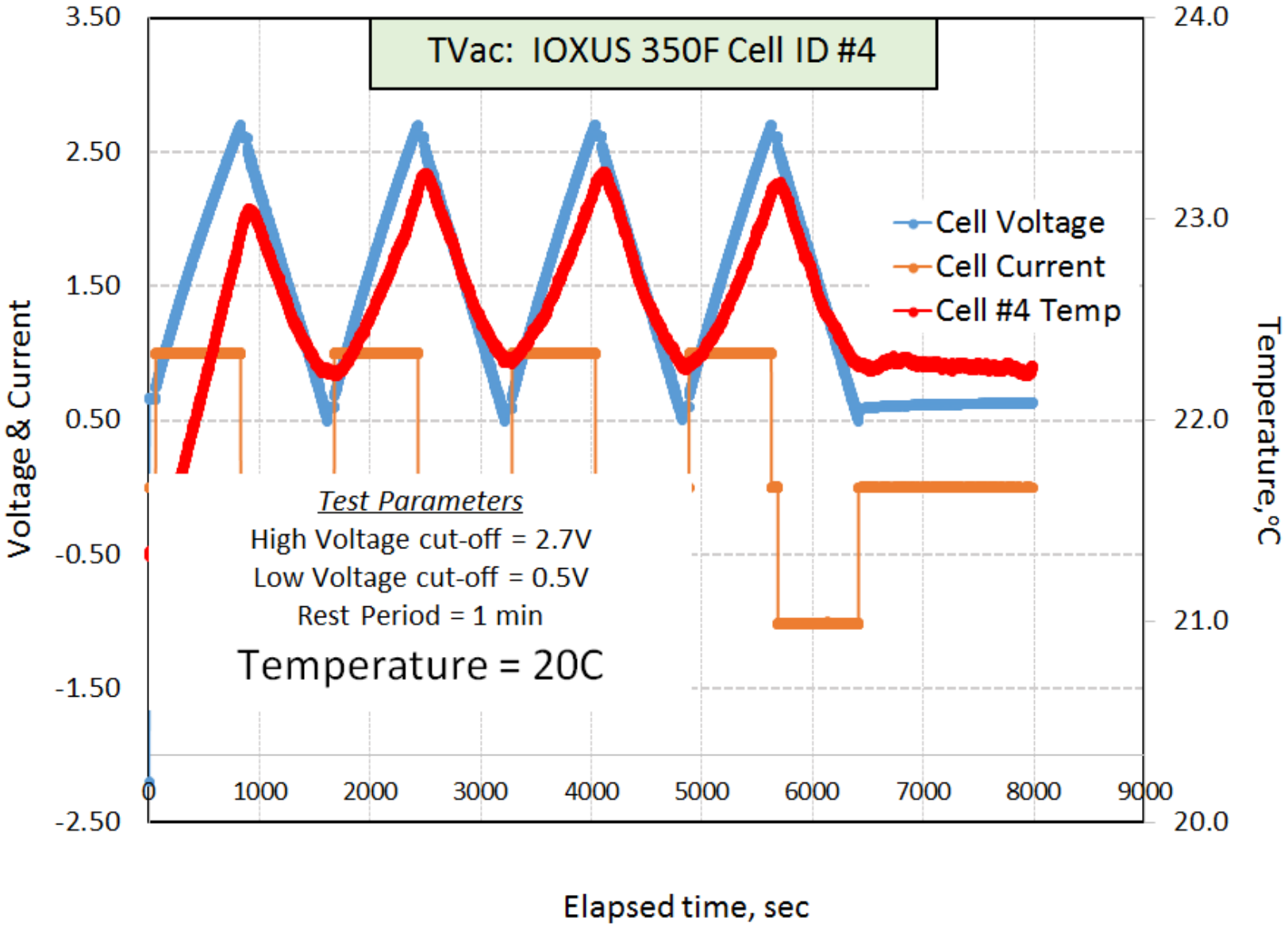

# Nesscap 100 F Cell Capacitance and ESR Summary

| NESSCAP Cell #3 | | | | | | |
|---|---|---|---|---|---|---|
| Step # | Temp (°C) | Chg Capacitance (F) | DChg Capacitance (F) | Charge ESR (mOhm) | Discharge ESR (mOhm) | Coulombic Efficiency |
| 1 | 20 | 102.6 | 100.2 | 17.18 | 17.60 | 97.6 |
| 3 | 60 | 104.2 | 98.7 | 22.21* | 10.46 | 94.7 |
| 5 | -40 | 97.0 | 97.2 | 15.70 | 14.90 | 100 |
| 7 | 20 | 100.1 | 98.2 | 17.68 | 8.94 | 98.1 |

| NESSCAP Cell #4 | | | | | | |
|---|---|---|---|---|---|---|
| Set # | Temp (°C) | Chg Capacitance (F) | Dchg Capacitance (F) | Charge ESR (mOhm) | Discharge ESR (mOhm) | Coulombic Efficiency |
| 1 | 20 | 102.5 | 99.7 | 14.25 | 9.96 | 97.3 |
| 3 | 60 | 103.4 | 99.1 | 16.40 | 13.62 | 95.9 |
| 5 | -40 | 97.4 | 96.1 | 22.59 | 15.45 | 98.7 |
| 7 | 20 | 99.4 | 98.7 | 14.27 | 11.10 | 99.3 |

| Vendor | Capacitance (Farads) | ESR (mΩ) |
|---|---|---|
| Nesscap | 100 | 10 |

# Ioxus 350 F Cell
# Capacitance and ESR Summary

| IOXUS Cell #4 | | | | | | |
|---|---|---|---|---|---|---|
| Step # | Temp (°C) | Chg Capacitance (F) | DChg Capacitance (F) | Charge ESR (mOhm) | Discharge ESR (mOhm) | Coulombic Efficiency |
| 1 | 20 | 382.7 | 365.3 | 6.4 | 7.1 | 95.5 |
| 3 | 60 | 399.6 | 369.3 | 1.5 | 0.2 | 92.4 |
| 5 | -40 | 363.7 | 357.8 | 6.7 | 11.9 | 98.4 |
| 7 | 20 | 375.4 | 362.8 | 7.9 | 7.1 | 96.6 |

| IOXUS Cell #7 | | | | | | |
|---|---|---|---|---|---|---|
| Step # | Temp (°C) | Chg Capacitance (F) | Dchg Capacitance (F) | Charge ESR (mOhm) | Discharge ESR (mOhm) | Coulombic Efficiency |
| 1 | 20 | 384.1 | 364.5 | 4.9 | 13.4 | 94.9 |
| 3 | 60 | 401.6 | 362.7 | 1.9 | 0.6 | 90.3 |
| 5 | -40 | 364.2 | 355.7 | 11.0 | 10.3 | 97.7 |
| 7 | 20 | 373.7 | 359.5 | 7.3 | 5.7 | 96.2 |

| Vendor | Capacitance (Farads) | ESR (mΩ) |
|---|---|---|
| Ioxus | 350 | 32 |

# Kemet 350 F Cell Capacitance and ESR Summary

| KEMET Cell #7 | | | | | | |
|---|---|---|---|---|---|---|
| Step # | Temp (°C) | Chg Capacitance (F) | DChg Capacitance (F) | Charge ESR (mOhm) | Discharge ESR (mOhm) | Coulombic Efficiency |
| 1 | 20 | 350.7 | 322.2 | 3.0 | 1.0 | 91.9 |
| 3 | 60 | 377.5 | 318.5 | 6.0 | 20.0 | 84.4 |
| 5 | -40 | 324.7 | 320.9 | 6.0 | 5.0 | 98.8 |
| 7 | 20 | 335.2 | 322.1 | 2.0 | 6.3 | 96.1 |

| KEMET Cell #10 | | | | | | |
|---|---|---|---|---|---|---|
| Set # | Temp (°C) | Chg Capacitance (F) | Dchg Capacitance (F) | Charge ESR (mOhm) | Discharge ESR (mOhm) | Coulombic Efficiency |
| 1 | 20 | 357.5 | 327.6 | 1.0 | 0.4 | 91.6 |
| 3 | 60 | 374.4 | 324.1 | 4.0 | 10.7 | 86.6 |
| 5 | -40 | 324.2 | 318.3 | 6.0 | 8.0 | 98.2 |
| 7 | 20 | 338.1 | 323.8 | 1.0 | 6.7 | 95.8 |

| Vendor | Capacitance (Farads) | ESR (mΩ) |
|---|---|---|
| Kemet | 350 | 3.1 |

# Before and After Test Cell Masses

| Cell | Pre-Tvac Mass (g) | Post-Tvac Mass (g) |
|---|---|---|
| Nesscap #3 | 31.09 | 31.08 |
| Nesscap #4 | 31.63 | 31.63 |
| Ioxus #4 | 75.00 | 75.00 |
| Ioxus #7 | 75.80 | 75.80 |
| Kemet #7 | 76.22 | 76.22 |
| Kemet #10 | 75.97 | 75.97 |

**No significant mass changes before vs. after evaluation**

# Summary

- **All cells passed initial screening**
  - No detectable mass loss
  - No loss in electrical performance
  - Visual inspection indicated no loss of seal
- **Next phase: extended, high pulse power cycling at high and low temperature limits**
- **Investigate wider range of cell types**

# Acknowledgements

The authors would like to acknowledge support from the NASA Electronics Parts and Packaging Program (NEPP).

This research was carried out at the Jet Propulsion Laboratory (JPL), California Institute of Technology under a contract with the National Aeronautics and Space Administration