MSR Contamination Knowledge Strategy, and the Role to be Played by M-2020

Prepared by the
Returned Sample Science Board
and M-2020 Project

Mar. 20, 2016

Government sponsorship acknowledged.

Introduction

- In order to achieve the objectives of Mars returned sample science (RSS), accurate and thorough knowledge of the state of contamination of the samples at the time of their analysis is required. We refer to this as contamination knowledge (CK). This is quite distinct from contamination control (CC), which is maintaining a rigorous cleanliness of all sampling hardware prior to sending the spacecraft to Mars.

Contamination Control:

Clean It: Appropriate cleaning and microbial reduction procedures applied to Sample Intimate and Sample Handling hardware

Keep it Clean: Sampling and Caching hardware is designed, configured, stored, handled, and operated in ways that prevent recontamination (FMBB gloves/covers, enclosures with HEPA filters, coatings, venting, etc.)

Contamination Knowledge:

Characterize the identity, and, potentially, sources of the returned sample contamination to maximize the scientific return should the samples be returned to Earth.

Need to Understand the History

- The CK at the time of sample analysis would reflect the sum of the contributions from all contamination vectors up to that point (e.g. since both volatile and particulate organics can redistribute during flight, CK generated on Earth cannot be directly related to CK at the time of sampling.) For this reason, understanding the history of contamination can be crucial.

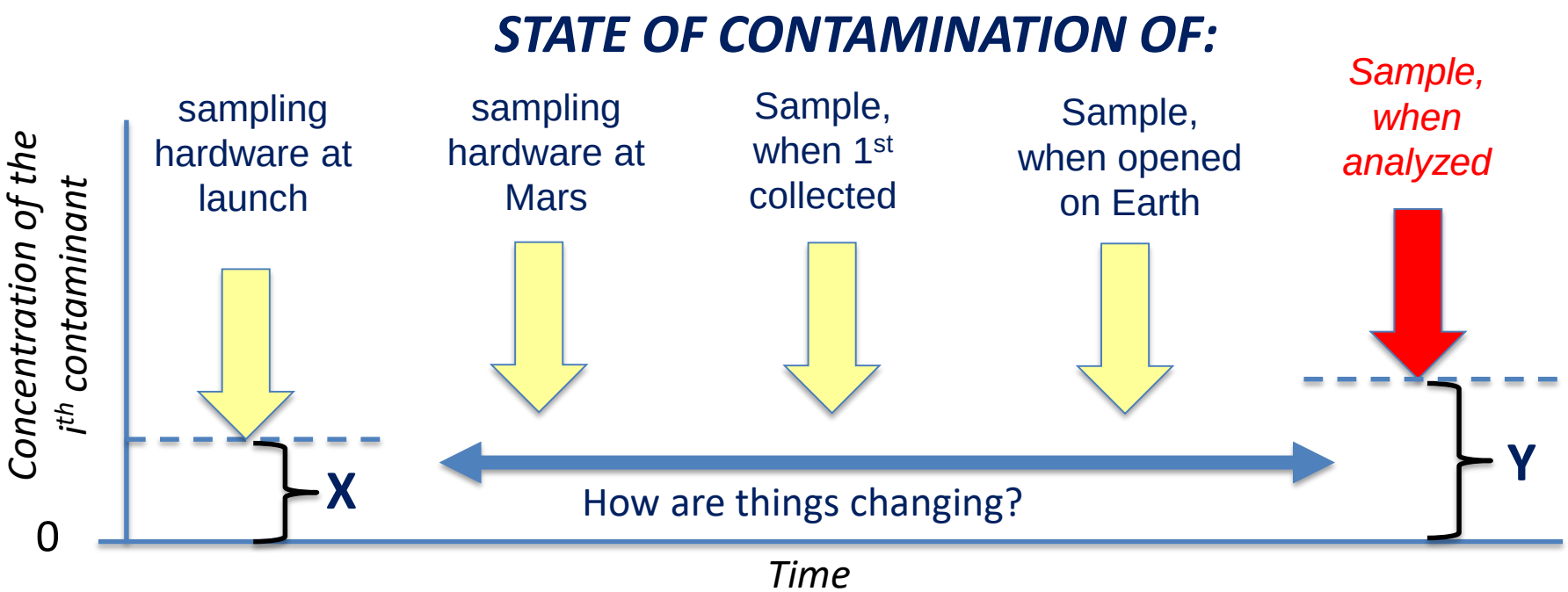

CK strategy: 3 Broad Phases

Phase 1 **Phase 2**

Potential Phase 3

- CK plan covering the time of the sample retrieval, Earth-return, delivery to the Mars sample receiving/curation facility, preliminary examination/ hazard assessment, scientific analysis, and long-term storage of the samples.

manufacturing & assembly

launch

Last sample deposited on surface

EM

M2020

Samples arrive at Earth

NeMO

MAV launch, return to Earth

SRL/MAV

SRF

These missions/projects are notional

Phase 2. Encompasses all aspects of the flight mission of the M-2020 sample-collecting rover through the sample sealing and caching.

Potential sources of Mars 2020 sample contamination

CK Phase 1: covering contamination sources C1-C4
CK Phase 2: covering C5-C6
CK Phase 3: covering contamination captured after sample caching

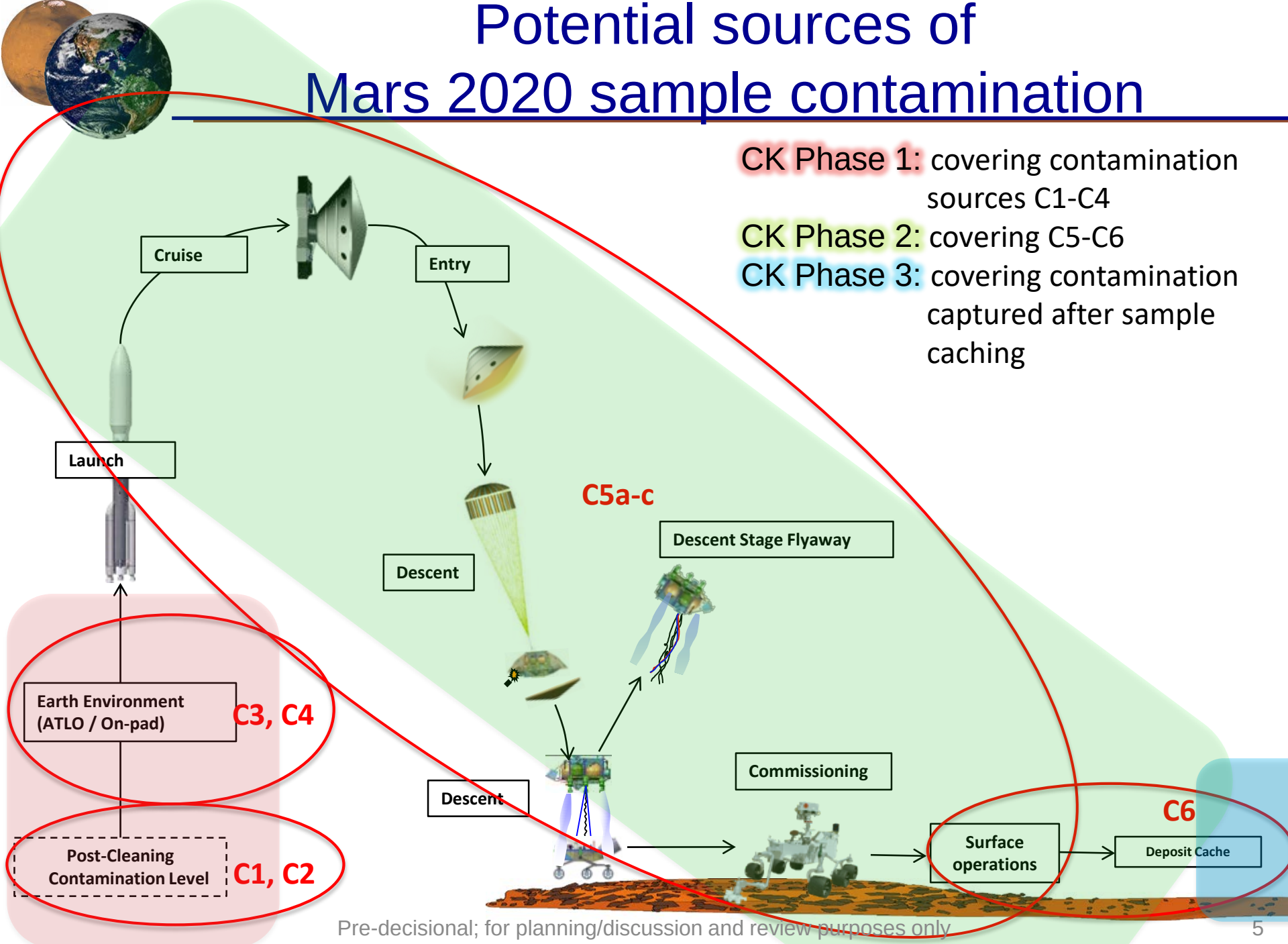

Potential contamination sources

Prior to sample acquisition

C1. Contamination intrinsic to the sample-contacting hardware surfaces (tubes, caps, and caging plugs)
C2. Contamination intrinsic to the drill bit assembly.
C3. Contamination deposited to the sample-containing hardware at ATLO (Assembly, test and launch operations)
C4. Contamination deposited to the drill bit assembly at ATLO
C5. Contamination added post –ATLO to
- a) interior of the sampling tubes within their storage rack prior to extraction from the rack and use for sample collection.
- b) caging plugs and the interior-facing surface of the caps within their storage device prior to use.
- c) drill bit assembly within the bit carrousel.

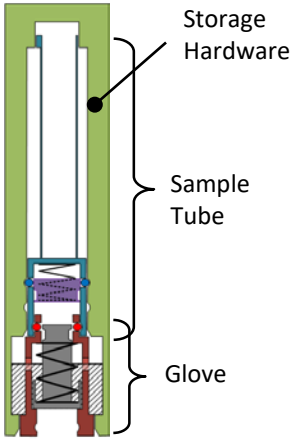

Tube in storage assembly

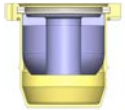

Hermetic seal cap

Caging plug

Coring bit

During and after sample acquisition

C6. Contaminants acquired by the sample itself
- a) transferred directly to the outcropping surface
- b) added directly to the sample in the act of drilling or sealing.
- c) added directly to the sample due to the failed tube seal during post-M2020 MSR campaign.

Sample acquisition

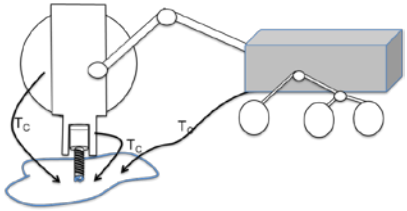

Sample Handling /sealing

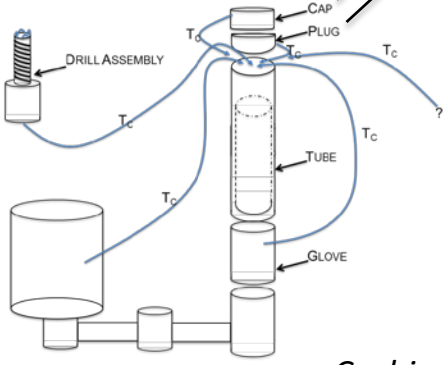

Caching sample tube

Components of the Phase 1 Plan

- Phase 1 CK plan covers contamination pathways C1-C4, including hardware manufacture, cleaning, handling and the assembly and testing phases of ATLO
- Phase 1 plan CK will be outlined in the M2020 project curation plan due by Critical Design Review (CDR).

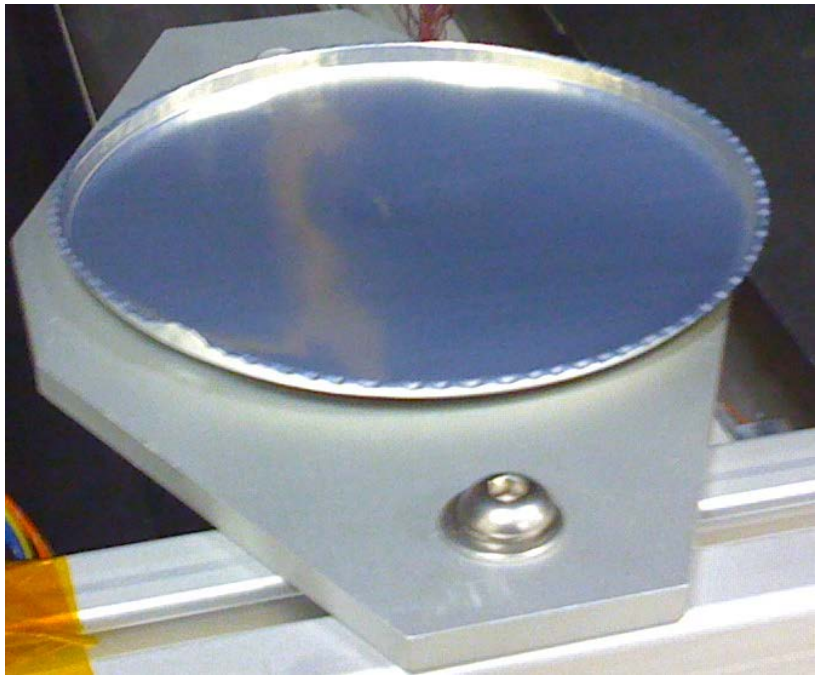

Contamination monitoring plate. This what is typically used for monitoring for molecular contamination. The plates are roughly 15cm diameter.

Image courtesy Brian Blakkolb

Components Considered for the Phase 2 Plan

A. Flight witness blanks

- This was found to be the single most effective strategy available to us—this forms the core of the CK program.

B. Flight drillable blank

- Advisable for any organic chemistry analysis analytic protocol involving bulk material. This would allow the analyst to systematically address the following:
  - known unknowns. Geochemists have spent several decades learning how to measure organic molecules in geologic samples, and are aware of issues like blanks, contamination, extraction efficiency, detection limits, interferences, etc.
  - unknown unknowns. Organic analysts deal all the time with contaminated samples that should not logically be contaminated.

C. An Earth-based drilling/sampling testbed using flight-equivalent hardware

Background: Blanks – General Principles

Some general principles for designing good blanks:

- The experiment(s) designed to characterize blanks should interrogate all contamination pathways involved in the sampling process.
  - Sampling process is defined here as end-to-end sample acquisition.
- The experiment(s) designed to characterize blanks should not be impacted by contamination pathways to which the samples are not exposed.
- Blank characterization need not be done in a single “end-to-end” experiment. There may be reasons for, and even advantages to, obtaining characteristic contamination in multiple discrete steps that can be added together to characterize contamination of the full process.

A. Flight Witness Blanks

- To monitor for changes to the contamination environment, witness tubes could be used to capture the contamination environment over sequentially targeted segments of surface operations.
- A particularly important class of contaminants that would be monitored by a witness blank is volatile organic compounds that might be outgassed during the time the sample tubes are open during surface operations, when they are especially vulnerable to contamination.
- A well-designed witness blank program would also generate needed CK for general elemental geochemistry.
- It seems likely that blank materials of more than one type may be needed to capture various aspects of contamination knowledge.
- Witness tubes could perhaps be designed to provide a monitor for secondary reactions in the sample tubes.

Concept of a Flight Witness Blank

TIME:

AS SHIPPED TO MARS

EXPOSURE PERIOD

FROM EXPOSURE UNTIL TUBE OPENED ON EARTH

Witness materials

Material #1 (tube inner coating)

Material #2

Material #3

Material #4

Material #n

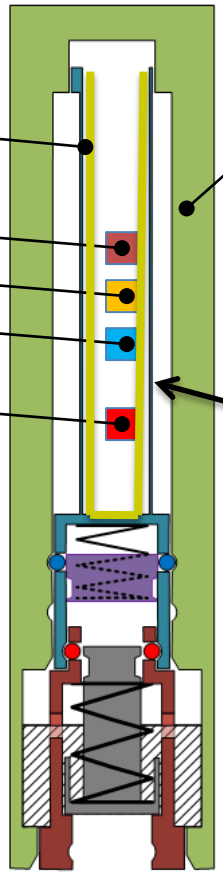

Note: Witness materials could be coatings, or solid materials. They will need to be attached (cannot be loose) and easily removed upon return

Tube in storage assembly

Tube open

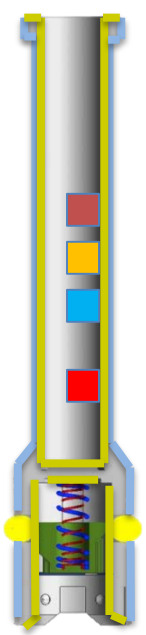

Tube extracted from the storage using drill bit and held open to expose to Mars condition

Cap inserted; Hermetic seal

Caging plug (required for natural cores; witnesses should be done the same)

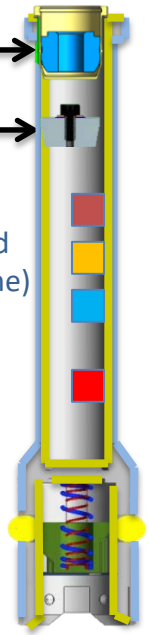

Sealed tube for caching

NOTE: Choice/configuration of witness materials deferred until later.

Concept of Witness Blank Acquisition

Sample acquisition

Rotary-
percussion

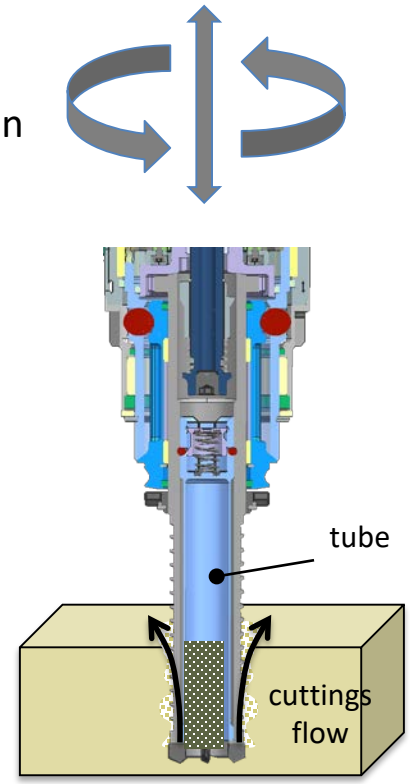

Witness blank exposure

Rotary-
percussion

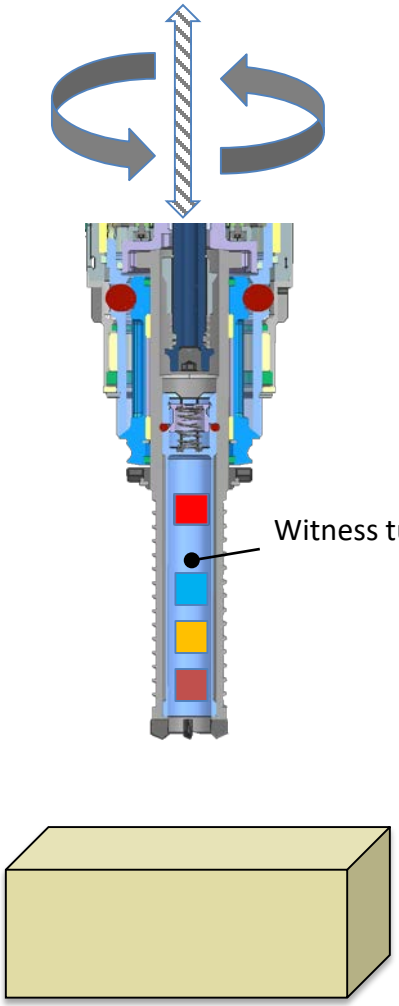

B. Drillable Blank

- Obtaining a blank by drilling and caching a core on Mars from a material of known near-zero organic concentration would provide an end-to-end check of the performance of the overall sample acquisition and analysis systems. A drillable blank sample would serve as a campaign-level blank that would go through the same sample acquisition, Earth-return, processing, sample prep, and analysis protocols as the martian samples that will be collected and cached.
- Organic compounds and volatile inorganic compounds indigenous to the drill bits could be transferred through or inherited during the machining process of the drill bits themselves, and these volatile compounds could be liberated and subsequently altered during the drilling process.
- Modification of VOC during the drilling process remains an unknown unknown that cannot be captured with confidence by Earth-based analog drilling studies or witness tubes because it is difficult to recreate, in every detail, the martian environment in which the drilling occurs on Mars. A synthetic analog (drilled blank) may not achieve this objective fully, but may capture at least some of the VOC modified by drilling.

Concept of Drillable Blank Acquisition

Sample acquisition

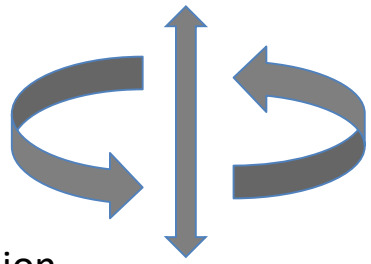

Rotary-percussion

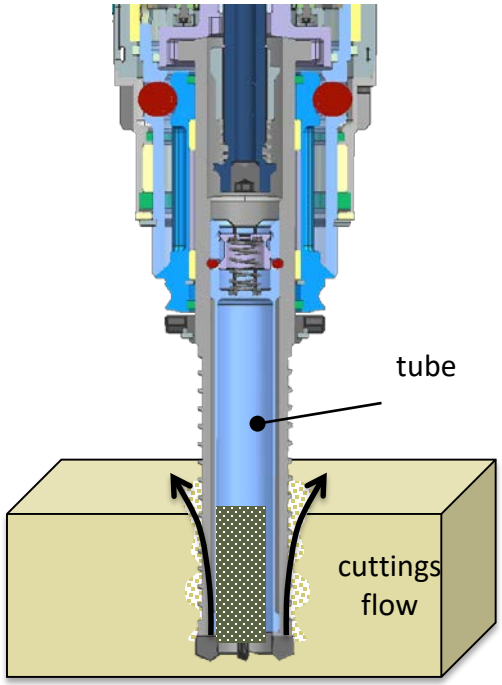

Drillable blank

Rotary only

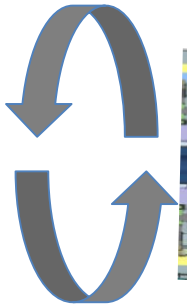

Punctured seal/foil
With its own OC

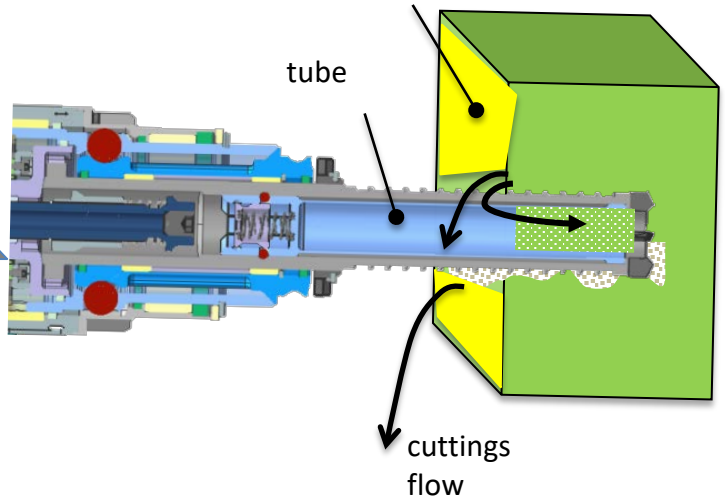

Pros and Cons of a Drillable Blank in addition to a compete process witness strategy

PROS

- Would provide the capability to witness interactions directly related to the drilling action
- Would serve as a campaign-level procedural blank, however, a proper set of witness blanks also may fulfill this goal.

CONS

- Serious engineering consequences
  - Mass
  - Volume/configuration
  - Risk (the mission has to work)
  - Human capital

Summary:

- The authors of this document agree that for M-2020, even though a drillable blank is “nice-to-have”, it is not “must-have”, given the constraints on the mission.
- If there is no drillable blank, it may be possible to add an additional ~4-5 sample tubes (something very valuable to science).

C. Earth-based drilling/sampling testbed

- Mars-analog testing would be particularly valuable for understanding the modes of inorganic contamination, most importantly, associated with the wear of drill bits and other moving components.
- Testing on Earth has the huge advantage that multiple geologic materials with a range of properties that encompass those of the natural samples on Mars can be evaluated.
- Designing these experiments does not have the time sensitivity inherent to designing the Phase 1 and Phase 2 CK plans, and this testing could continue even after the samples have been retrieved and returned to Earth.

Earth-based drilling/sampling testbed

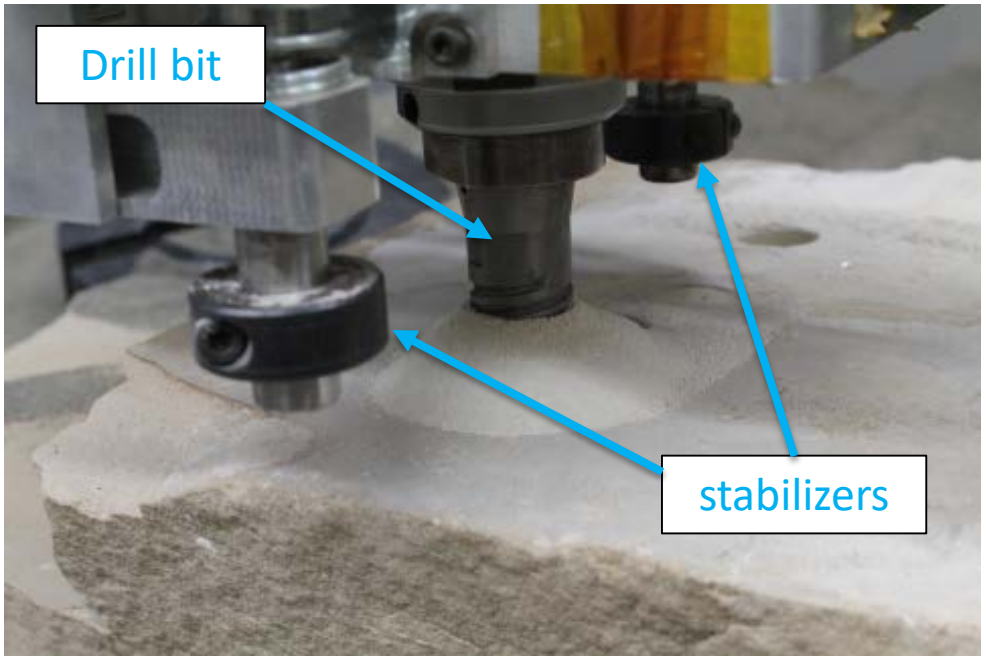

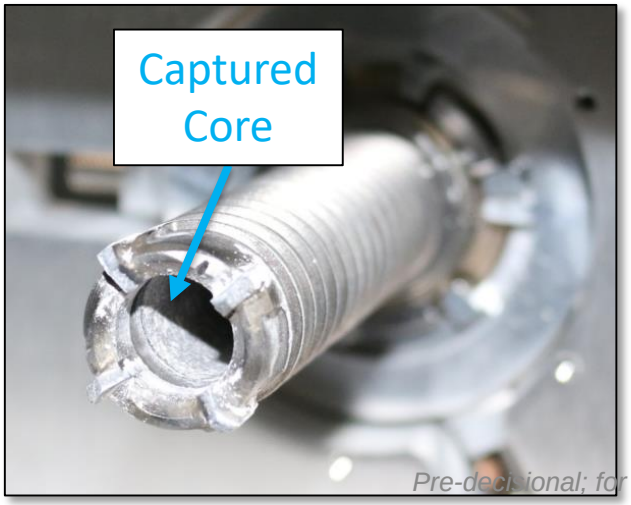

- Hardware would need to be lot-identical with the drill flown to Mars.
- Having the capability to do at least some tests in a Mars environmental chamber may be important to understand the behavior of some contaminants
- Would witness direct interaction between bit and rock.

Components Considered for the Phase 3 CK Plan

1. During potential sample retrieval and return
2. After receipt of samples on Earth:
   - Major witness plate program
   - Spatially resolved analysis as a strategy for dealing with contamination. Can be extremely powerful at distinguishing contamination from natural signal, e.g., by comparing sample surface to sample interior.

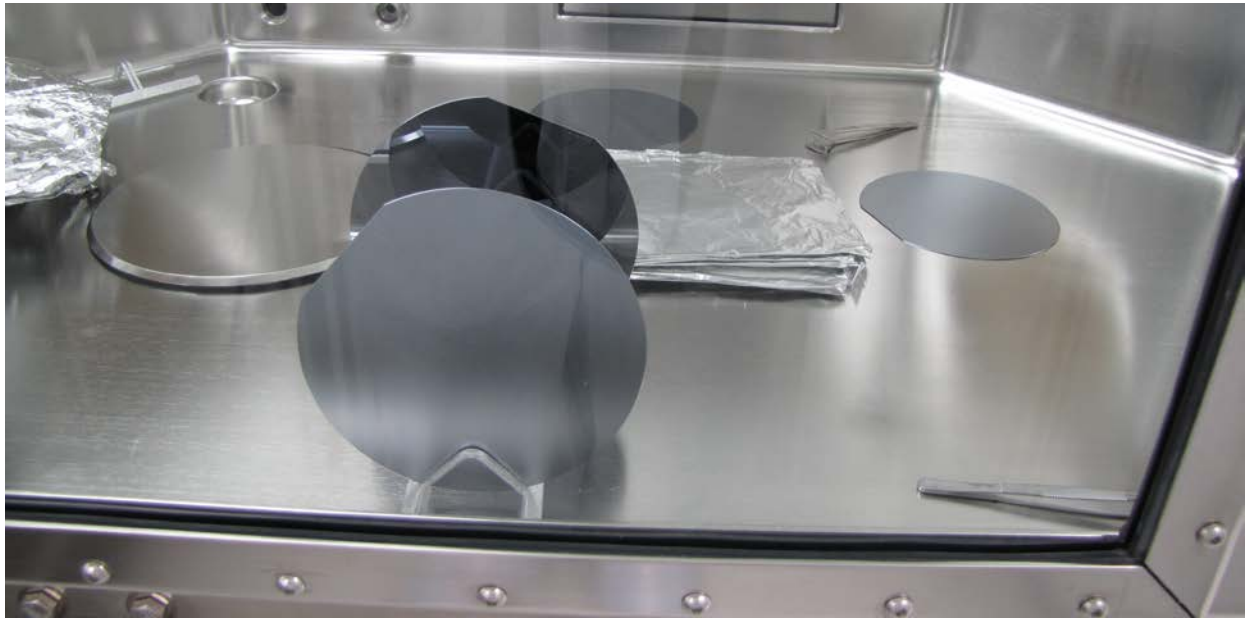

Balazs witness wafer (for organics and also for inorganic elemental measurements) used in Genesis lab and in the Hayabusa glovebox before samples were introduced.

CK Witness Plate Deployment Strategy

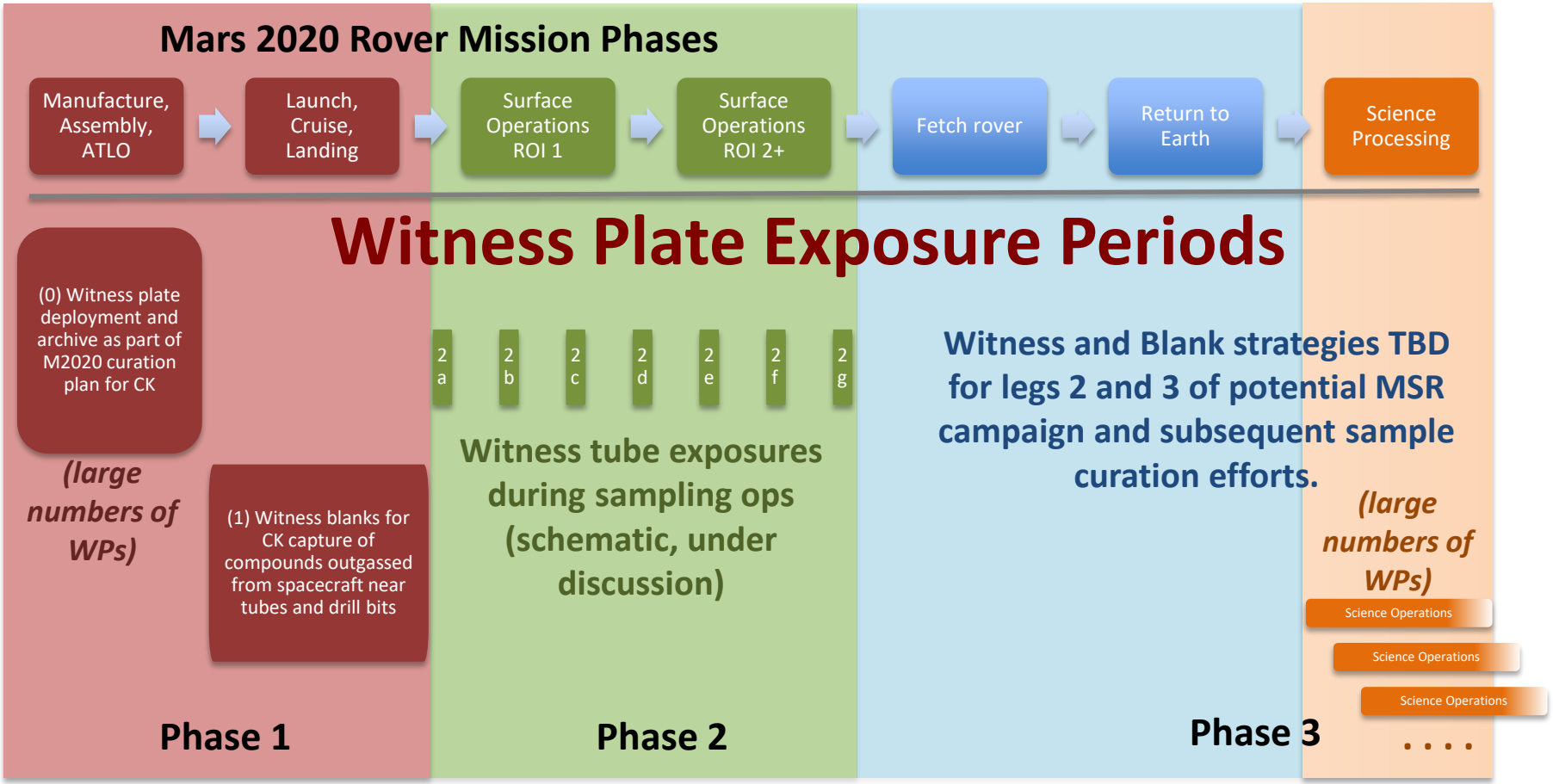

In order to track the introduction of contaminants, the witness plate strategy would need active control over witness plate exposure during discrete mission phases.

Summary of CK Plan for Future MSR

Phase 1: Major pre-launch witness plate program

Phase 2: During flight and Mars surface operations

a) Robust flight witness blank program
b) On-Earth lot-identical drill testbed, probably also with a Mars environmental chamber

Phase 3: During possible sample retrieval, return and after receipt of samples on Earth:

a) Major witness plate program
b) Spatially resolved measurements on the samples

Backup

RSSB affiliations

- Beaty, David (Jet Propulsion Laboratory, California Institute of Technology)
- McSween, Hap (Univ. of Tennessee)
- Czaja, Andrew (Univ. of Cincinnati)
- Goreva, Yulia (Jet Propulsion Laboratory, California Institute of Technology)
- Hausrath, Elisabeth (Univ. of Nevada, Las Vegas)
- Herd, Christopher (Univ. of Alberta)
- Humayun, Munir (Florida State Univ)
- McCubbin, Francis (NASA JSC)
- McLennan, Scott (Stony Brook University)
- Pratt, Lisa (Indiana University)
- Sephton, Mark (Imperial College, London)
- Steele, Andrew (Carnegie Institution of Washington)
- Weiss, Benjamin (MIT)
- Hays, Lindsay (Jet Propulsion Laboratory, California Institute of Technology)
- Meyer, Michael (NASA HQ)