EUROPA MISSION

Multidisciplinary Model Transformation through Simplified Intermediate Representations

Bjorn Cole; Kevin Dinkel

Jet Propulsion Laboratory
California Institute of Technology

Outline

- Introduction
- Initial Discoveries
- Example and Insights

© 2016. California Institute of Technology

Intro

© 2016. California Institute of Technology

Transformation: What and Why?

6 DOF Mass

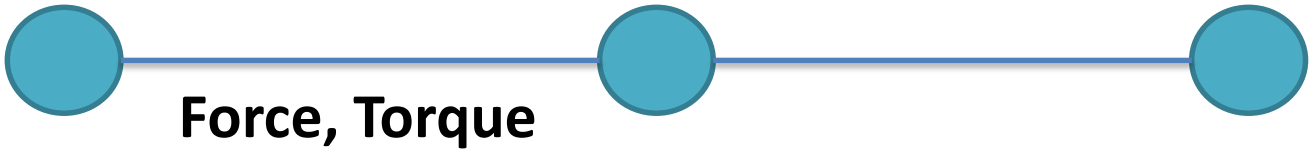

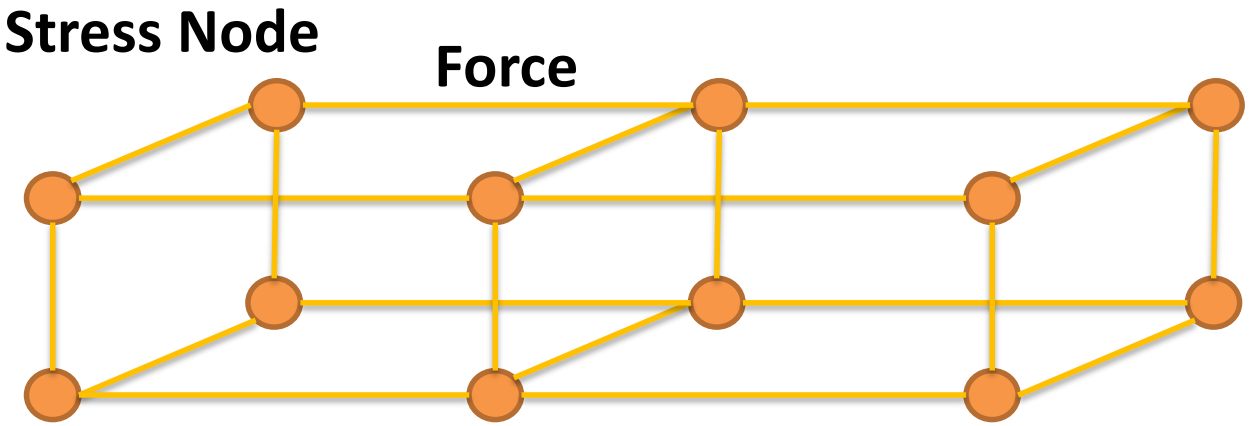

© 2016. California Institute of Technology

Previous Experiences

- Previous model-to-model transformation supported DARPA F6 architectural evaluation engine
  - One-step transformation; roughly 1000 lines of Query-View-Transform (QVT) code
  - Dynamically generated analysis workflows based on architecture selections in a SysML model
- Investigated a variety of model integration problems within Europa project:
  - Integrated resources analysis
    - 3 tools + system model
  - System model to CAD synchronization
  - System model to project planning tools

© 2016. California Institute of Technology

Common Needs Discovered

- Each tool owner wants control over their own tool and reserve the right to change model formulation (and inputs)
- Cost to get a developer deep enough in two tools and transformation to be effective is prohibitive and do not want to maintain competency for occasional updates
- Transformations should execute quickly to be part of integrated workflow

© 2016. California Institute of Technology

Initial Discoveries

© 2016. California Institute of Technology

What‘s the Best Way to Hold Information?

- XMI (XML Model Interchange) format is the standard
  - But terrible for search …
  - Also, the Web seems to be going away from XML toward standards like JSON

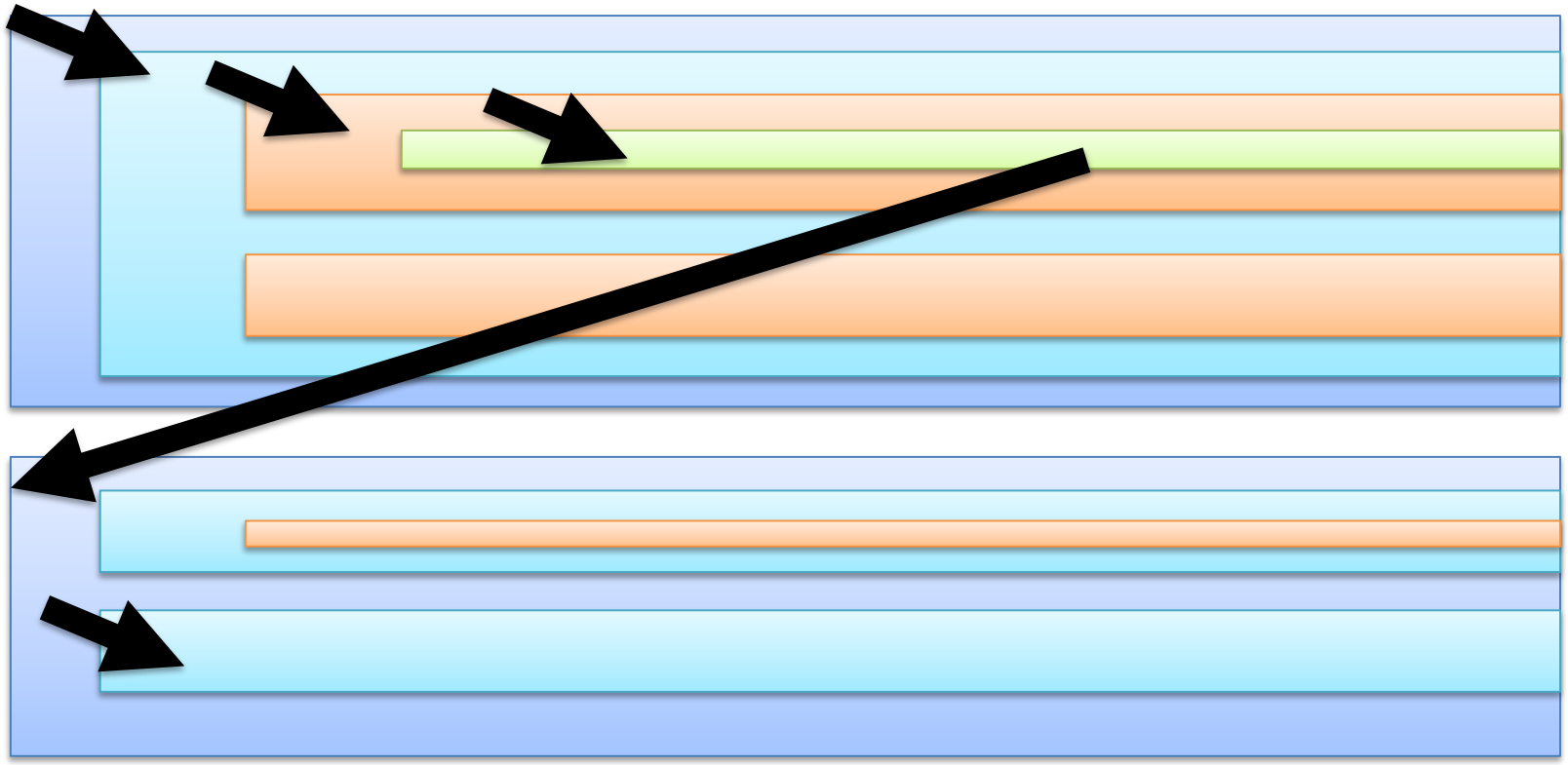

© 2016. California Institute of Technology

What‘s the Best Way to Hold Information?

- Want to be able to follow relationships back and forth (you don’t know what direction will be desired):
  - Leads to making the graph much more explicit
  - Proper id sorting accelerates search

```
Block MySystem {
  part : PartType
}

Block PartType
```

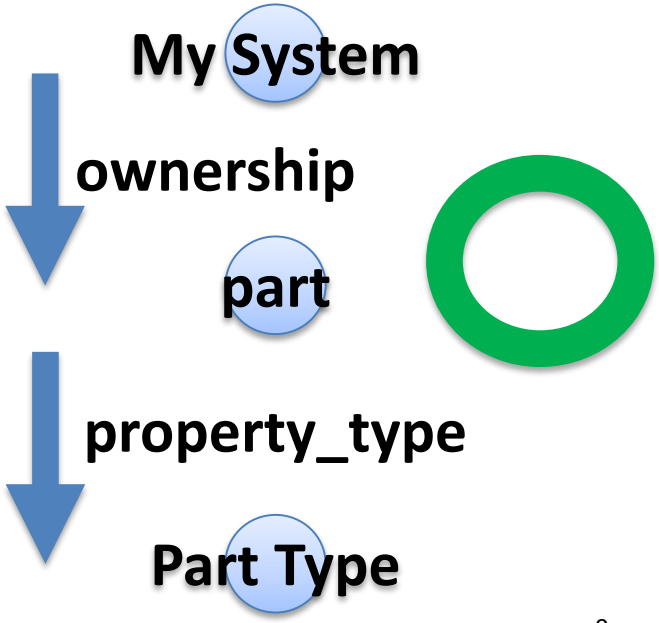

© 2016. California Institute of Technology

Providing Flexibility

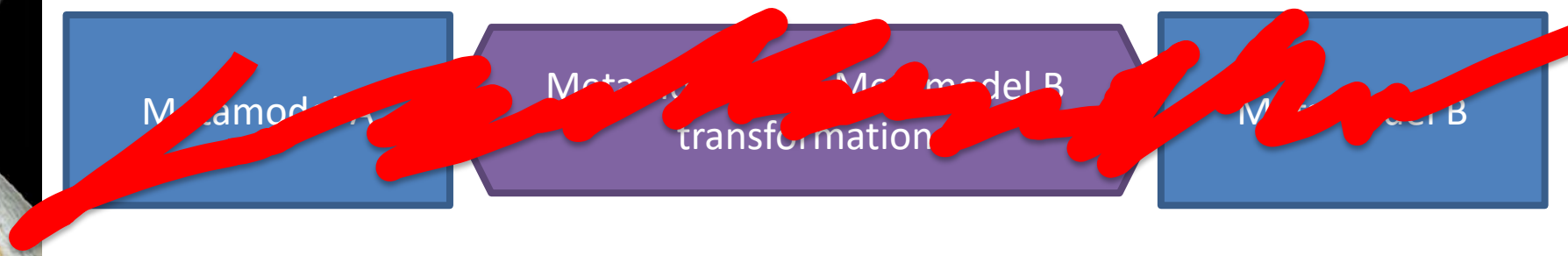

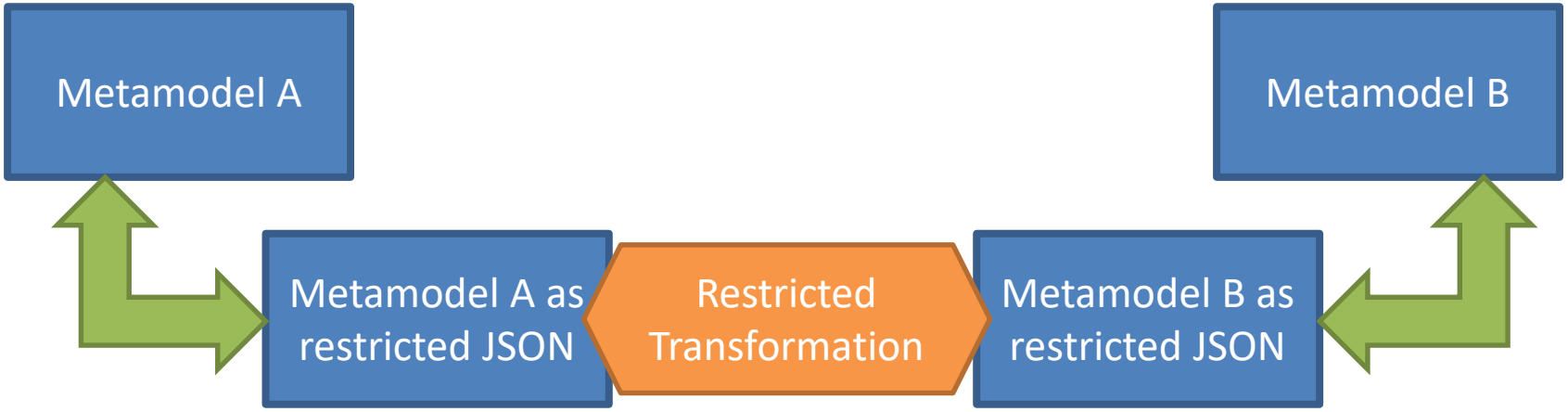

© 2016. California Institute of Technology

Project Example and Insights

© 2016. California Institute of Technology

Europa Resources Simulation

- Have four things to connect:
  - System model
  - Home-built mission planning tool (APGEN)
  - Modelica simulation
  - Home-built power subsystem tool (MMPAT)
- States evolving over time interchanged with a timeline management system
- Need to get the list of components and their possible operating behaviors out of system model into other tools
- Focus here will be on SysML -> Modelica

© 2016. California Institute of Technology

Extracting Data from System Model

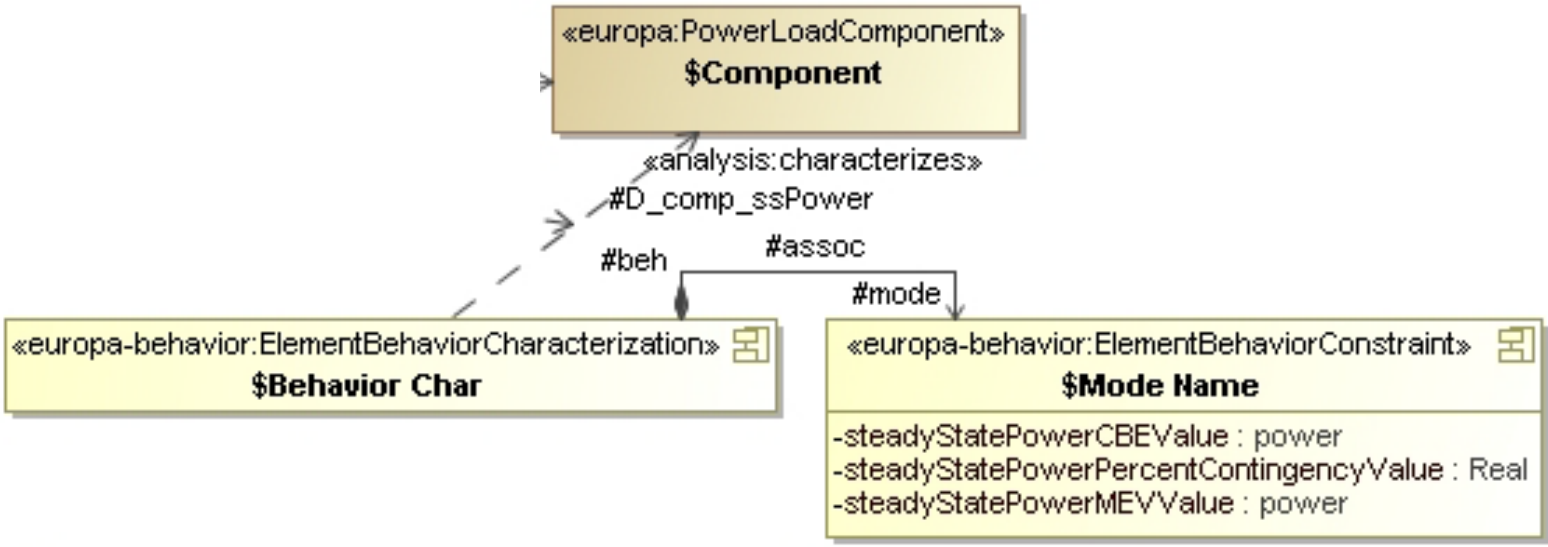

© 2016. California Institute of Technology

Component Mapping

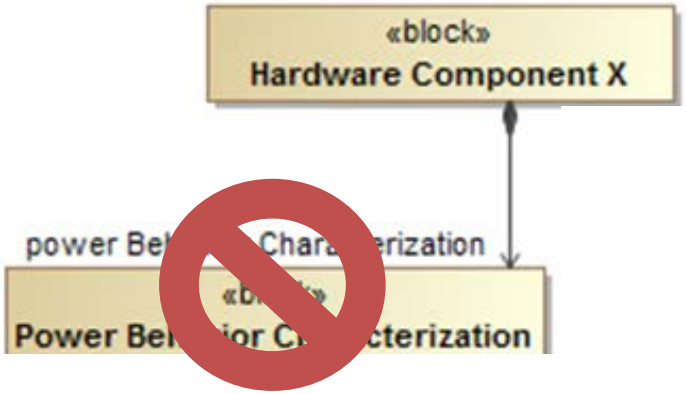

© 2016. California Institute of Technology

Relationship Mapping

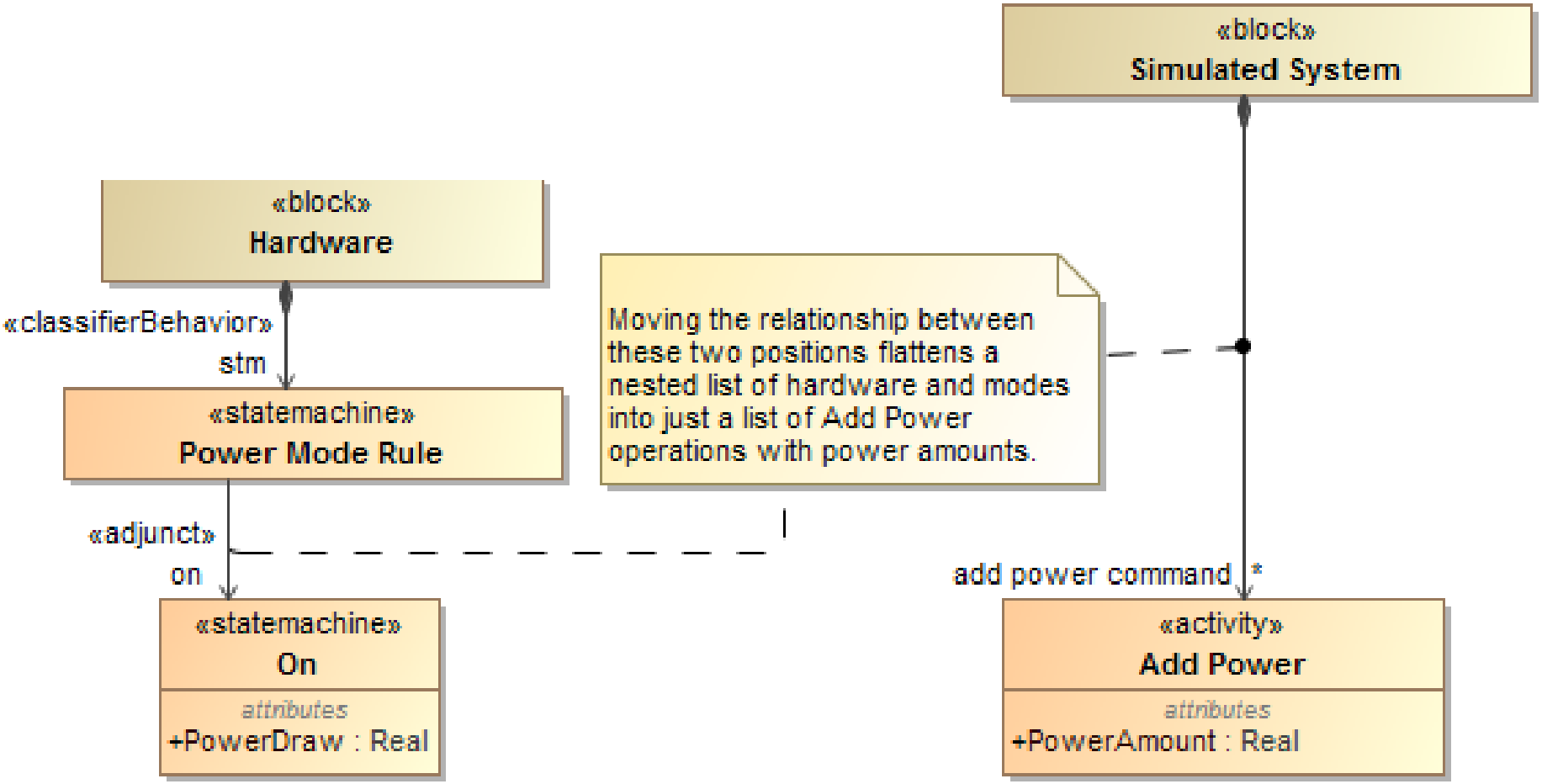

© 2016. California Institute of Technology

Dealing with Multiple Values

© 2016. California Institute of Technology

Building Modelica Components

- Main lifting done by 3 library functions:
  - Component mapper
  - Relationship mapper
  - Parallel relationships -> dictionary
- Functions applied for each type of component and relationship

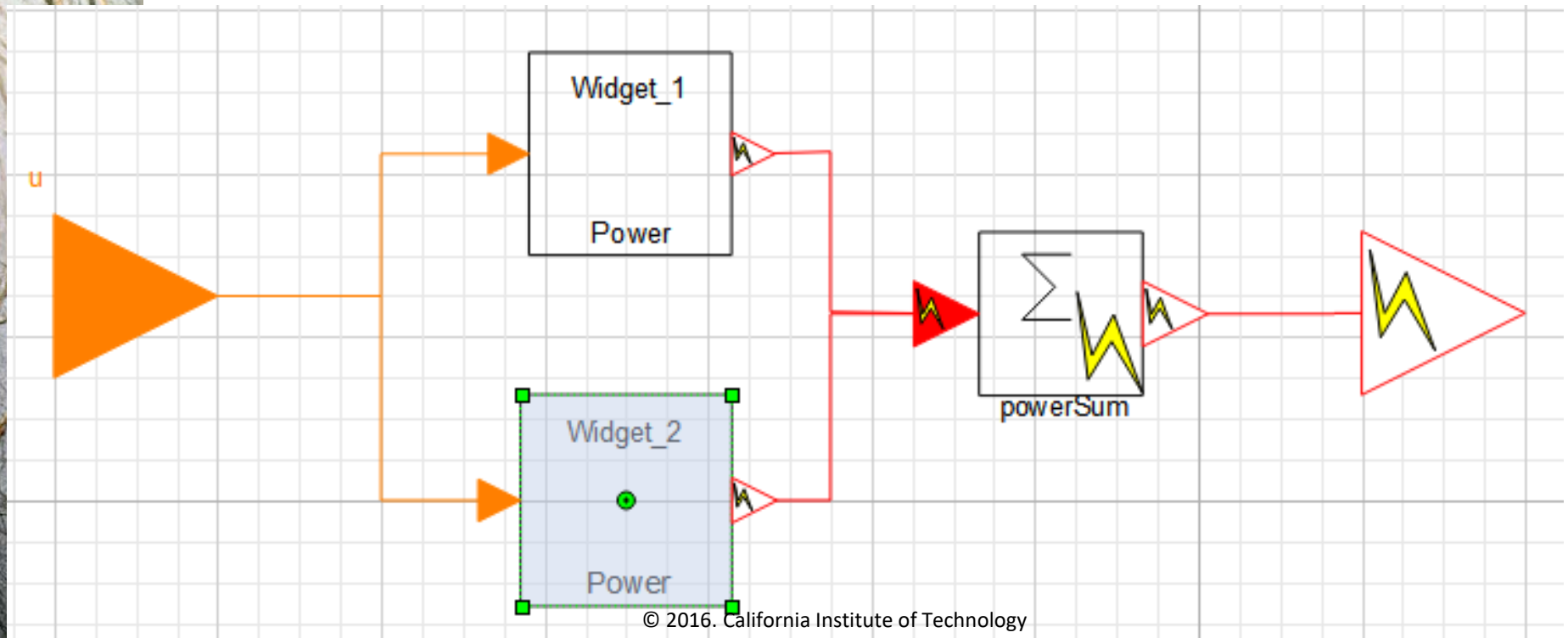

© 2016. California Institute of Technology

What We Learned

Principles in this talk came from the Europa examples:

- APGEN engineer started effort by wanting more control over how to accept data; he preferred this to me doing all the work for him!
- Highlighting relationships as graph edges first done for pattern matching but became essential in interchange format
  - Led to many other insights on working with edges as a first-class part of the story
- Practical insights like needing to keep fields human-readable even if it is really an ID reference
  - Your hair will thank you!

© 2016. California Institute of Technology

Summary

- Model transformation is valuable but good approach is not obvious in the literature
- Three-step approach keeps individual tool SME's in control
- Examples point the way forward in practical transformation:
  - Leverage the graph (especially relationships!) to navigate your information
  - Make each step easy to read by people or you'll go crazy in the debug!

© 2016. California Institute of Technology

Acknowledgements

- Alek Kerzhner – base Pattern Factory
- Eric Ferguson – APGEN engineer
- Wolfram Research – consulting on advanced methods to control Modelica tool

Work performed using NASA funds on Europa mission; government sponsorship acknowledged

© 2016. California Institute of Technology