RADIOISOTOPE
POWER SYSTEMS

Science Instrument Sensitivities to Radioisotope Power System Environment

Brian Bairstow
Systems Engineer, RPS Mission Analysis

Young Lee, William Smythe, June Zakrajsek

POWER TO EXPLORE

Radioisotope Power Systems

- Radioisotope Power Systems (RPS) enable many deep space missions, particularly outer planet missions
- RPS use the decay of a radioisotope (Pu-238) as a heat source, and convert the heat to electrical power via various methods.
  - Radioisotope Thermoelectric Generators (RTGs) use Thermoelectrics (TE), which create a voltage via the Seebeck effect.
  - Stirling Radioisotope Generators (SRGs) use Stirling engines, which use the heat to drive pistons and then convert the motion into electricity.
- Current RPS use general-purpose heat source (GPHS) modules as heat sources
  - For the purpose of this assessment, each GPHS module is assumed to produce 250 W_{th} at beginning of life (BOL)

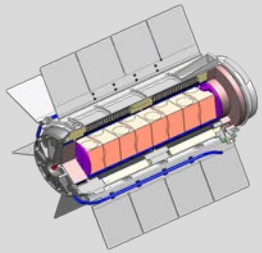

Multi-Mission Radioisotope Thermoelectric Generator (MMRTG)

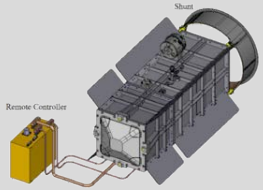

Advanced Stirling Radioisotope Generator (ASRG)

GPHS Exploded View

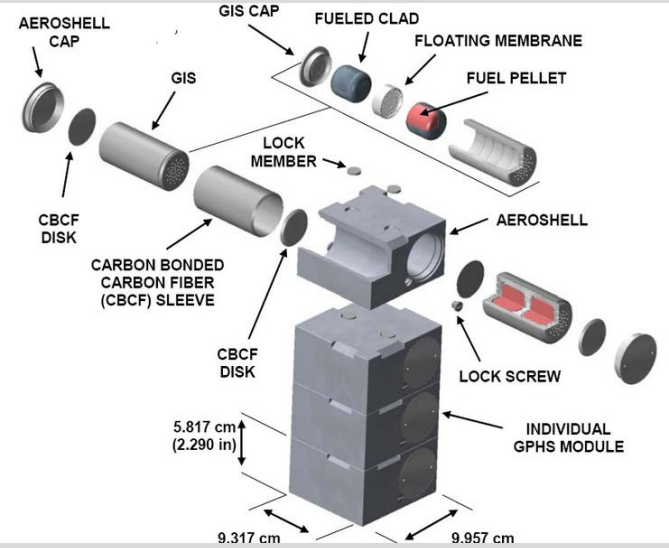

RPS Induced Environments

- RPS could induce environments that impact science instruments and measurements.
  - These potential impacts to science instruments must be understood (and mitigated where necessary) to ensure mission success.

Power System Induced Environments	Minimum Level of Impact	Maximum Level of Impact	Environment Impacts on Orbiter Instruments	Mitigation Strategies
Gamma Radiation	< 1 krad over 15 years at 1 meter for 2-GPHS RPS	1.5 krad over 15 years at 1 meter for 18-GPHS RPS	Damage to sensitive components (memory, ADCs, operational amplifiers). Increase in noise in most detectors.	Shielding, separation, error correction codes, use of less sensitive components
Neutron Radiation	~3 n/cm^2-s at 0.5 meters for 2-GPHS ASRG	300 n/cm^2-s at 1 meter for 18-GPHS RPS	Single event failures. Detector noise from displacement damage.	Shielding, separation, error correction codes, spike detection and removal, thermal annealing, use of less sensitive components
Thermal	0.5 kW$_t$ for 2-GPHS RPS	4.5 kW$_t$ for 18-GPHS RPS	Need to isolate RPS from radiators, thermal imagers.	Separation, pointing instruments away from RPS, heat shades
Vibration	0 for TE	TBD for Potential Stirling (ASRG = 35 N maximum dynamic force)	Need to damp vibration for sensitive imagers.	Separation, damping
EMI	Low for TE	Potential Stirling EMI in 20 dB uV/m range	Detector and magnetometer noise	Separation
Magnetic	< 0.1 nT	< 0.1 nT	Magnetometer noise.	Separation

Reference Power Systems

- This assessment focused on four RPS:
  - Multi-Mission Radioisotope Thermoelectric Generator (MMRTG): 8-GPHS system currently powering Mars Science Laboratory
  - Enhanced MMRTG (eMMRTG): Upgraded MMRTG currently under development.
  - 6-GPHS SRG: Notional future higher-power system.
  - 16-GPHS Segmented Modular Radioisotope Thermoelectric Generator (SMRTG) : Notional future higher-power system.

Notional RPS	MMRTG	eMMRTG	6-GPHS SRG	16-GPHS SMRTG	Unit
BOL Power (4 K)	125	157	370	456	W_e
BOM Power (4 K, BOL + 3 years)	108	146	357	434	W_e
EOM Power (4 K, BOL + 17 years)	55	103	297	347	W_e
BOL Power (270 K)	124	154	331	454	W_e
BOM Power (270 K, BOL + 3 years)	107	143	319	432	W_e
EOM Power (270 K, BOL + 17 years)	55	101	266	346	W_e
Degradation Rate	4.8%	2.5%	1.16%	1.6%	
Diameter	20.3	20.3	33	20.3	cm
Radiator Tip-to-tip Diameter	65	65	N/A	53.7	cm
Length	68	68	65	106.8	cm
GPHS Heat Load (BOL)	2,000	2,000	1,500	4,000	W_{th}
GPHS Heat Load (EOM)	1,784	1,784	1,312	3,567	W_{th}
BOL Waste Heat	1,875	1,843	1,089	3,544	W_{th}
Disturbance Force (@ 100 Hz)	N/A	N/A	16.9	N/A	N
BOL Specific Power	2.9	3.6	7.9	8.4	W_e/ kg
System Mass	43.6	43.6	46.8	54.2	kg
BOL Efficiency	6.3%	7.9%	24.7%	11.4%	
EOM Efficiency	3.1%	5.8%	22.6%	9.9%	

Pre-Decisional Information -- For Planning and Discussion Purposes Only

Approach

- The specific instrument packages from two Design Reference Missions (DRMs) were assessed in quick look studies for their interactions with the new reference power systems.
  - The DRMs chosen for study were 2010 Decadal Survey mission concepts:
    - Titan Saturn System Mission (TSSM)
    - Uranus Orbiter and Probe (UOP)
  - The original Decadal Survey TSSM and UOP concepts did not have complete instrument performance requirements so typical measurement requirements were assumed where needed.

- In addition, the general RPS environments were evaluated for impacts to various types of instruments.

Impacts on TSSM of New RPS (1 of 2)

- TSSM concept was originally studied in 2008 with ASRGs and MMRTGs.
- The 2014 TSSM study assessed the impacts of accommodating 6-GPHS SRGs and 16-GPHS SMRTGs.

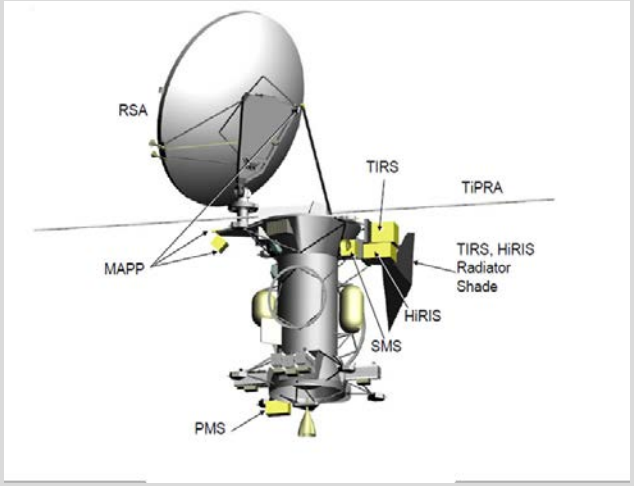

- Radiation: The 2008 TSSM study looked at an MMRTG option with 5 units (total of 40 GPHS modules), and estimated an induced dosage at the payload of 2 krad.
  - This is less than the contribution from the space environment estimated at 7 krad.
  - With a radiation design factor (RDF) of 2, instruments would need to be rated to 18 krad, which is achievable for most space components, but not Commercial Off-The-Shelf (COTS) parts.
  - The eMMRTG, 6-GPHS SRG, and 16-GPHS SMRTG could provide the necessary power with fewer total GPHS modules, and thus lower gamma ray doses.

Impacts on TSSM of New RPS (2 of 2)

- Thermal: The 2014 TSSM study found that the thermal design could successfully incorporate the 6-GPHS SRG and the 16-GPHS SMRTG, even at a higher power level.
  - The High-Resolution Imager and Spectrometer and Thermal Infrared Spectrometer are thermally isolated and utilize existing thermal shades.

- Vibration: The 2008 TSSM study determined that at 35N of maximum induced mechanical disturbance (from the *ASRG ICD*) the spacecraft would likely need some vibration damping.
  - The 6-GPHS SRG has more engines and could have slightly higher disturbance forces than the ASRG values - this would need to be verified when the design is more mature.

- EMI: The Decadal Survey TSSM study assessed the ASRG EMI values to be of no concern for all payload measurements.
  - The 6-GPHS SRG would expect to be at similar EMI levels as ASRGs - this would need to be verified when the design is more mature.

TSSM Payload Overview

Mission	Instrument	Exemplar	Detector	Electronics	Potential Impact
TSSM	Imager/spectrometer (HIRIS)	New Horizons LORRI, MRO HIRISE, MRO CRISM, Chandrayaan-1 M3	CCD, HgCdTe	ADC	Thermal
	Penetrating radar/altimeter (TIPRA)	MRO SHARAD, Mars Express MARSIS	Antenna	GaAs amps, CSA	
	Mass Spectrometer (PMS)	Rosetta ROSINA	Magetof (cascade amp)	Dynode surface	Radiation
	Sub Millimeter Spectrometer	MRO, ODIN, Aura MLS	Antenna	GaAs, CSA	Vibration (microphonics)
	Thermal IR spectrometer	Cassini CIRS	HgCdTe, bolometer	ADC, Laser, amp	
	Magnetometer	Cassini, Ulysses	Helium or Fluxgate Sensor	ADC, FPGA	EMI – potential impact from SRG
	Energetic particle detector	New Horizons PEPSSI, Juno JEDI	MCP, dynode surface	CSA	Noise from gammas
	Langmuir Probe	Cassini	Antenna	ADC	None
	Plasma	Deep Space 1 PEPE	MCP	CSA	Noise from gammas
	Accelerometer	Cassini, Juno		Amplifiers	

Impacts on UOP of New RPS (1 of 2)

- UOP concept was originally studied for the Decadal Survey in 2010 with ASRGs.
- The 2014 UOP study assessed the impacts of accommodating 4-GPHS SRGs and 9-GPHS SMRTGs.

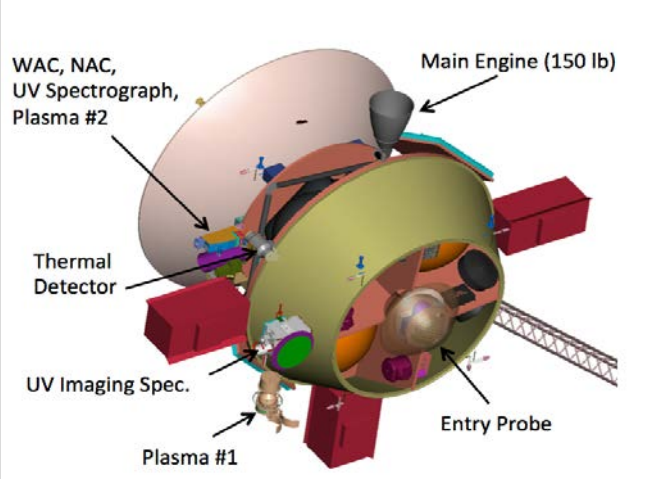

- Radiation: The close proximity (<0.5 meter) of instruments to the RPS in the notional spacecraft layout would result in higher noise levels but would not exceed typical radiation dose constraints for instruments
  - At that distance the instruments would experience ~2.5 krad/year from a Galileo style 18-GPHS RTG. The studied approaches would use fewer GPHS modules.
  - The noise from radiation could be readily ameliorated by relocation of the payload or the power sources.

Impacts on UOP of New RPS (2 of 2)

- Thermal: Replacing ASRGs with SMRTGs would increase thermal output by a factor of 4.
  - This has been addressed historically with addition of heat shields around the power sources, though this would be complicated by the compact spacecraft design.

- Vibration: The considered UOP configuration makes microphonics and jitter a potential issue because of close proximity of instruments to RPS.
  - The 6-GPHS SRG has more engines and could have slightly higher disturbance forces than the ASRG - this would need to be verified when the design is more mature.
  - This may require addition of dampers and/or relocation of the payload.

- EMI: UOP has instruments sensitive to EMI but was designed to operate with ASRGs.
  - The new RPS are expected to be at similar EMI levels as ASRGs - this would need to be verified when the designs are more mature.

UOP Payload Overview

Mission	Instrument	Exemplar	Detector	Electronics	Potential Impact
UOP	WAC	New Horizons LORRI	CCD	ADC	Radiation, Vibration
	NAC	Messenger MDIS	CCD	ADC	Radiation, Vibration
	VNIR	New Horizons RALPH	HgCdTE	ADC	EMI
	Thermal	MRO DIVINER	Thermopile	ADC	Thermal
	UV Spectrometer	New Horizons Alice	MCP, dynode	ADC	None
	SWAP Plasma Instrument 1	New Horizons SWAP	MCP, Dynode	CSA	Noise from gammas
	JEDI Plasma Instrument 2	Juno JEDI	MCP, Dynode	CSA	Noise from gammas
	Magnetometer	Cassini, Ulysses	Helium or Fluxgate Sensor	ADC, FPGA	EMI – potential impact from SRG
	USO	New Horizons USO	Oscillator	Logic, heater circuits	
UOP – probe	Mass spectrometer	Galileo	MCP	CSA	Radiation
	Atmospheric structure	Galileo	Strain gauge	ADC	None
	Nephelometer	Galileo	CCD	Laser, CSA	Radiation
	USO	New Horizons USO	Oscillator	Logic, heater circuits	

Radiation – Impacts

- RPS are significant sources of radiation. Alpha particles are easily shielded, but RPS also produce gamma rays and neutrons. The potential effects on payload include:
  - Damage to electronics and sensitive surfaces
    - Total Ionizing Dose (TID)
    - Direct Displacement Damage (DDD)
  - Increased noise on the sensors
  - Complicating measurement of the pristine *in situ* environment by adding energetic electrons, ions, and neutrons.

- Induced radiation is a function of the number of GPHS modules, and distance between the RPS and the payload
  - The relationship with number of GPHS modules is not strictly linear, due to self-shielding effects.
  - The relationship with separation distance is roughly $1/r^2$

Radiation – TID

- The TID from a Galileo style 18-GPHS RTG at 1 meter separation is ~1 krad over 10 years
  - This is an order of magnitude lower than the environmental dose rate at Mars, and would have a correspondingly lower contribution to instrument noise and to permanent damage to payload sensors.
  - Missions with multiple units would see higher TID.
  - RPS with fewer GPHS would induce lower TID.
  - COTS parts can be as soft as 1 krad, and may be impractical for use with RPS.
- If configuration issues force < 0.5 meter separation between the RPS and the payload, the TID could be significantly higher.
- Some parts (operational amplifiers, analog to digital converters, and memory) are normally soft at about the 25 krad level, though it is possible to shield them or make them more robust.

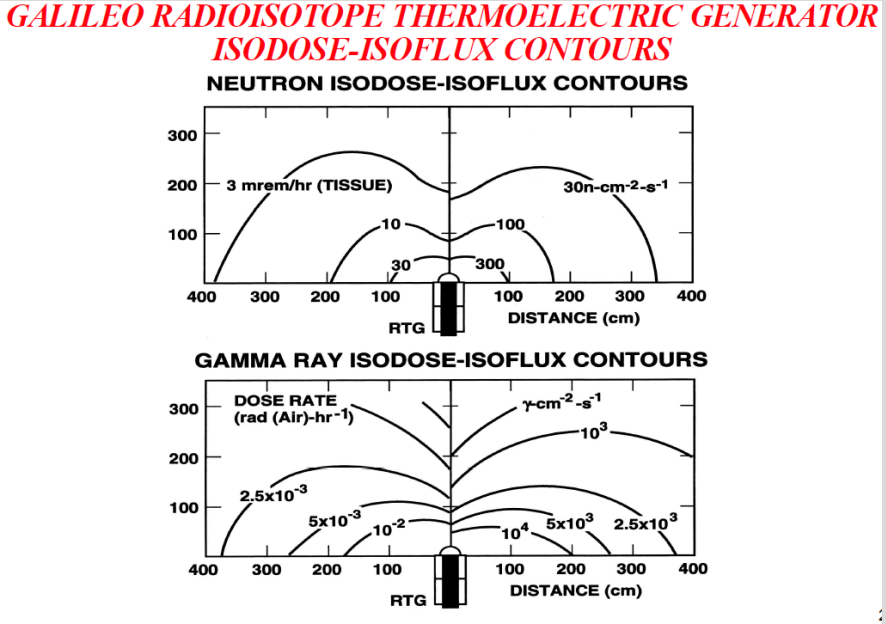

Source: H. Garrett, Space Radiation Environment Modeling Efforts at JPL (2006)

Radiation - Mitigation

- Separation is a very effective strategy as radiation decreases as r^2, but the design would become challenging when separation distances exceed a few meters.

- Sensitive components could be shielded in a radiation vault or with spot shielding.
  - E.g. Juno used a 180 kg radiation vault to reduce the Jupiter dose to the electronics from ~300 krad to 25 krad. With a RDF of 2, this allowed the mission to use 50 krad capable components.

- SEU-type events could be mitigated with error correction codes, and, for detectors, with spike detection and removal.

- DDD in detectors could be corrected with thermal annealing.

- Instruments could be designed to be more robust, though this can be costly.
  - Components on Galileo were designed to 150 krad to survive the Jupiter environment.

Thermal – Impacts and Mitigation

RPS BOM Thermal Output [Total Heat / Waste Heat]

MMRTG	eMMRTG	6-GPHS SRG	16-GPHS SMRTG
[2.0/1.9] kW_t	[2.0/1.85] kW_t	[1.5/1.15] kW_t	[4.0/3.55] kW_t

- The thermal output from the RPS could impact instruments, but these effects could be mitigated.
  - Certain sensitive instruments (e.g. IR spectrometers, thermal spectrometer, and other instruments requiring cooling) would need to be pointed away from the RPS end of the spacecraft and shaded.
  - Instrument radiators would need to be shielded from view of the power system radiators.
  - Optics might require blanketing or shielding to avoid distortion arising from differential heating.
  - The radiated power would also add to complexity of the launch configuration.

- Heating from the 16-GPHS SMRTG would be twice the ~2 kW_t of current existing RPS (i.e., MMRTG).
  - We have found no reports in the literature of this level of radiated waste heat having a measurable effect on orbital in situ measurements.

Vibration – Impacts

- SRGs would use Stirling engines with moving parts to produce power. Though they use opposed pairs to balance out most of the vibration, there are still residual effects.
  - Vibration levels for the ASRG have been tested (see next slide).
  - Higher power Stirling engines might have higher vibration levels; further design maturation and analysis is needed.
  - TE devices do not produce vibration.

- Certain instruments are sensitive to vibration/jitter:
  - Cameras have acceleration and maximum angular displacement amplitude limits to avoid line-of-sight jitter.
  - Some instruments (e.g. submillimeter spectrometer) are sensitive to microphonics
  - Seismometers could be very sensitive to vibration if they are looking at the same vibration spectrum; these and other in-situ instruments would require additional study.

Vibration – ASRG

- Stirling convertor tests and the interface specifications for ASRGs show vibration levels that are well within typical spacecraft environmental specifications and thus should not be an issue for heritage instruments.
  - The ASRG ICD stated a frequency vibration of 102.2 Hz and a maximum dynamic force of 35 N.
  - If operating in unbalanced mode (if one engine fails and the opposing engine is not shut off), the maximum dynamic force rises to 500 N.
  - FEM analysis of MSL and Cassini concluded that the “ASRG produces a jitter source that is typical as compared to other spacecraft components that are being used for sensitive flight missions” and that vibration isolation adapters can be designed to specific missions to meet jitter requirements.

ASRG ICD Vibration Spectra, for nominal and unbalanced operation

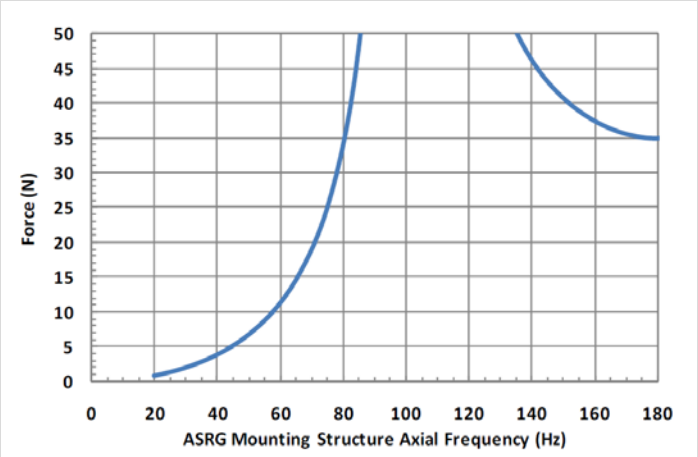

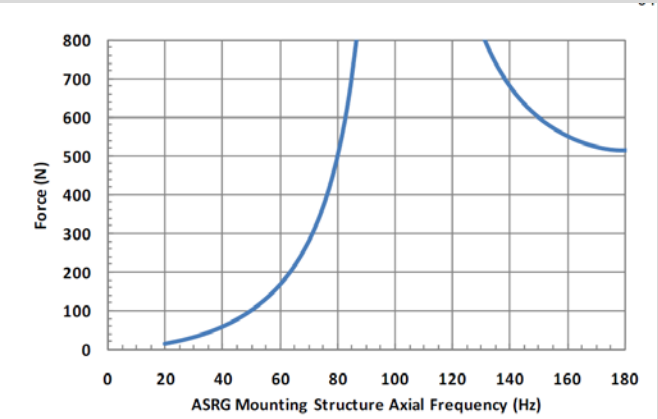

Figure 5.2-2. Disturbance Force to the SV During Single-ASC Operation.

Vibration – Mitigation

- Separation of RPS and the payload would reduce the effect of vibration.
  - The magnitude of vibration impact is a strong function of the separation distance between the vibration source and the sensitive area, with a less than perfectly stiff structure soaking up much of the vibration.

- Vibration could be damped using isolation adapters or adjusting the spacecraft structure or design.

- Missions using Stirling devices would need to have a contingency plan for a single engine failure – whether that plan is to include accommodations for the increased vibration issues, or to cease operation of the matched pair engine.

EMI and Magnetic Fields

- No EMI issues have been identified for RPS that lie beyond normal environmental specifications.
  - The electric fields radiation emissions limits from the ASRG ICD are ~20 dBuV/m for sensitive frequencies.
  - EMI from TE RPS is low.

- The current trend for payload magnetic requirements is 0.1 nT at the magnetometer.
  - ASRGs, operating in balanced mode, are rated to meet this requirement.
  - Magnetic fields from TE RPS is low.

- Larger Stirling engines, or SRGs in unbalanced operation might generate more EMI or magnetic fields. Further design maturation and analysis would be needed to quantify these levels.

- Separation is an effective mitigation strategy, as EMI varies with distance as $1/r^2$ and magnetic fields vary with distance as $1/r^3$

Conclusion

- RPS can induce radiation, thermal, vibration, EMI, and magnetic field environments that must be understood to avoid impacting spacecraft payloads and science measurements.
  - Given a 1 meter separation distance, radiation from RPS would be lower than the contribution from most space environments, and the same mitigation approaches apply.
  - Though a new, higher power RPS could generate more heat per unit than the ASRG and the MMRTG, thermal impact could be mitigated with shading and pointing, if required, by the mission. Alternatively, excess heat could provide benefits in some thermal environments.
  - Vibration for new SRGs would be expected to be similar to the ASRG test data, and while this would be expected to be low, it would need to be considered and addressed during spacecraft and instrument design.
  - EMI and magnetic fields for new RPS would be expected to be low as for the current RPS, but would need to be considered and addressed if there are sensitive instruments.

Acknowledgements

- Jet Propulsion Laboratory
  - John Elliott
  - Sabrina Feldman
  - Insoo Jun
  - Neil Murphy
  - William McAlpine
  - Rob Green
  - Imran Mehdi
- Johns Hopkins University Applied Physics Lab
  - John Boldt
  - Rob Gold

Questions?