Nuclear and Emerging Technologies for Space 2016

Multi-Mission Radioisotope Thermoelectric Generator Experience on Mars

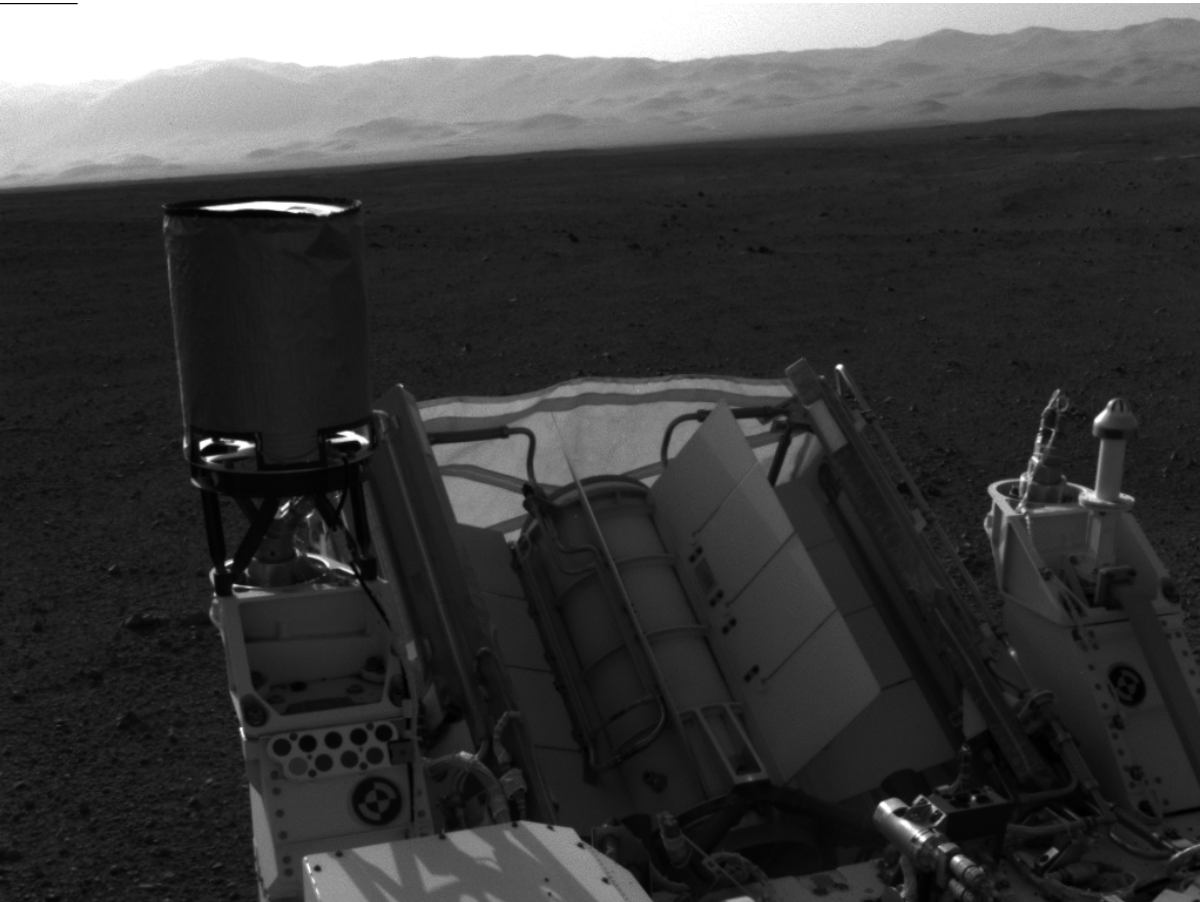

Eric G. Wood

Jet Propulsion Laboratory, California Institute of Technology

© 2016 California Institute of Technology.
Government sponsorship acknowledged.

Outline

- Background
- MMRTG Design
- Thermoelectric Couple Design
- Integration of MMRTG into MSL Rover
- MMRTG Modeling
- MMRTG Internal Shorting
- Summary and Acknowledgements

Background

- The Mars Science Laboratory (MSL) rover, named Curiosity, has been exploring the surface of Mars for over 1220 Martian Sols.
- Its power source is a Multi-Mission Radioisotope Thermoelectric Generator (MMRTG) designated Flight Unit 1 (F1).
- The MMRTG design was intended to enable RTG use on planetary surfaces as well as in space.
- The constant power output has simplified surface operations in contrast to solar-powered missions such as the MER rovers Spirit and Opportunity.
- Challenges include:
  - higher-than-expected degradation rate
  - internal shorting

MMRTG Design

- 8 GPHS blocks
- Radiative link to:
- Heat Distribution Block (HDB)
- 16 Thermoelectric Core Assemblies
- Aluminum Case
- 8 Fins
- Inert cover gases

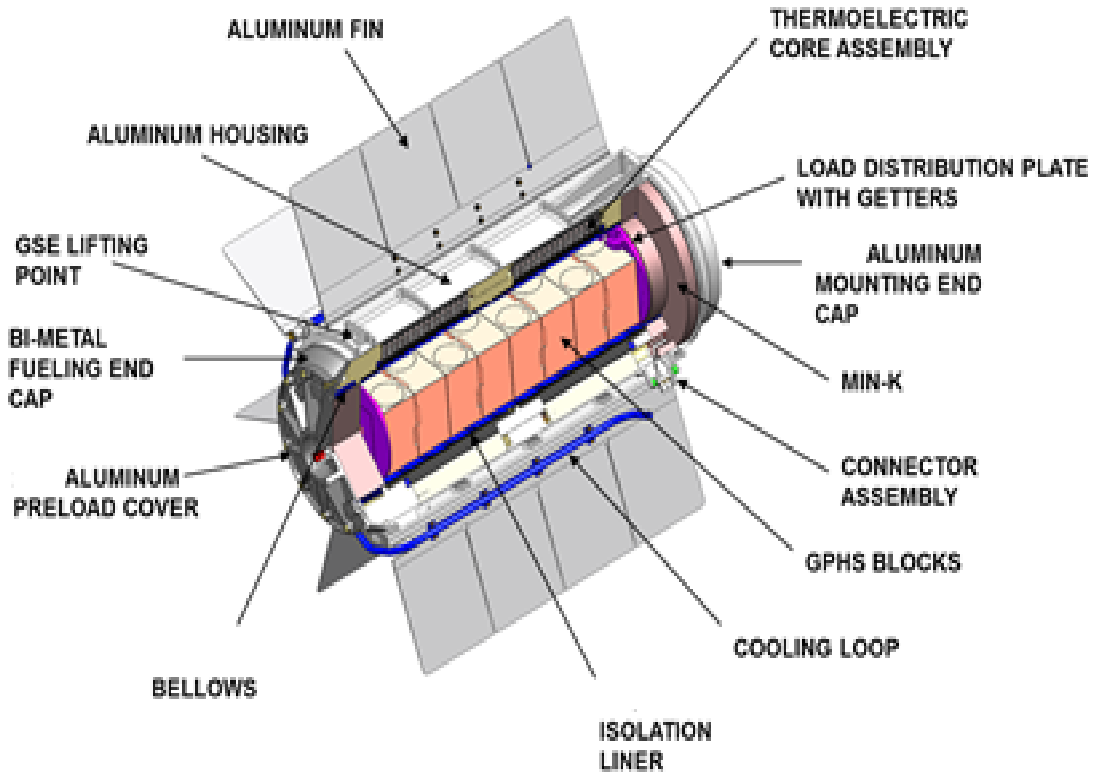

Thermoelectric Core Assembly

- Spring-loaded TE legs to maintain contact with HDB
- Electrical cross-strapping
- Module bar in direct contact with case

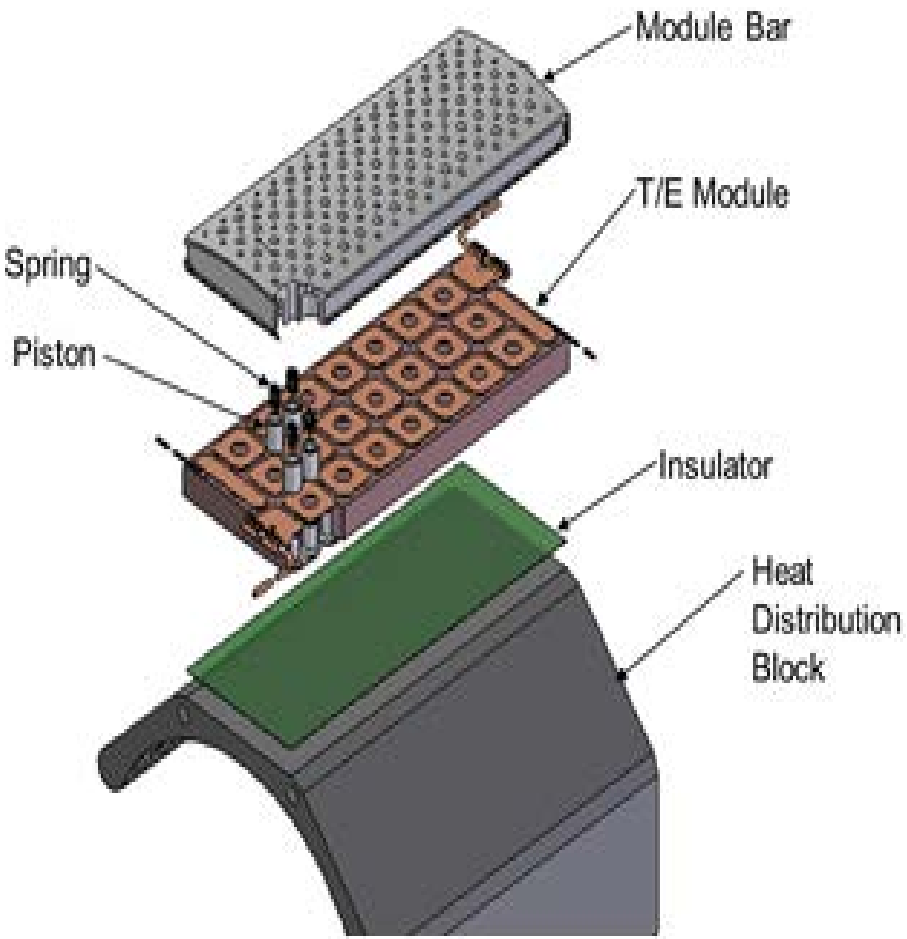

Thermoelectric Couple Assembly

- Single-segment N-leg
- Two-segment P-leg
- TAGS: Te/Ag/Ge/Sb

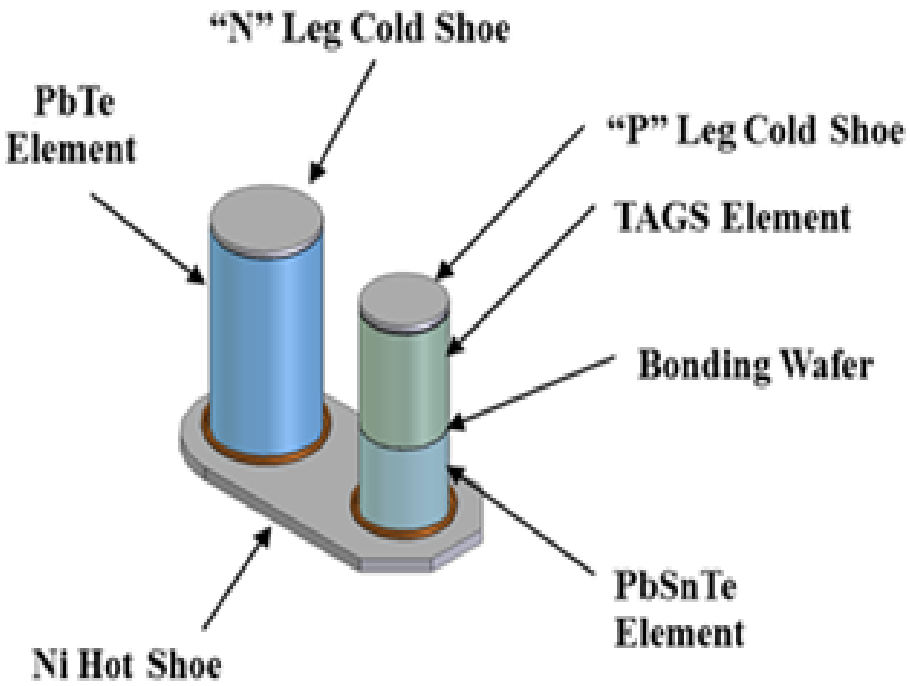

Mechanical and Thermal Integration

- Mounted at angle for launch vehicle accommodation and dust shedding
- Panels alongside for integration with rover heat management system
- Rear fabric baffle to moderate effects of wind

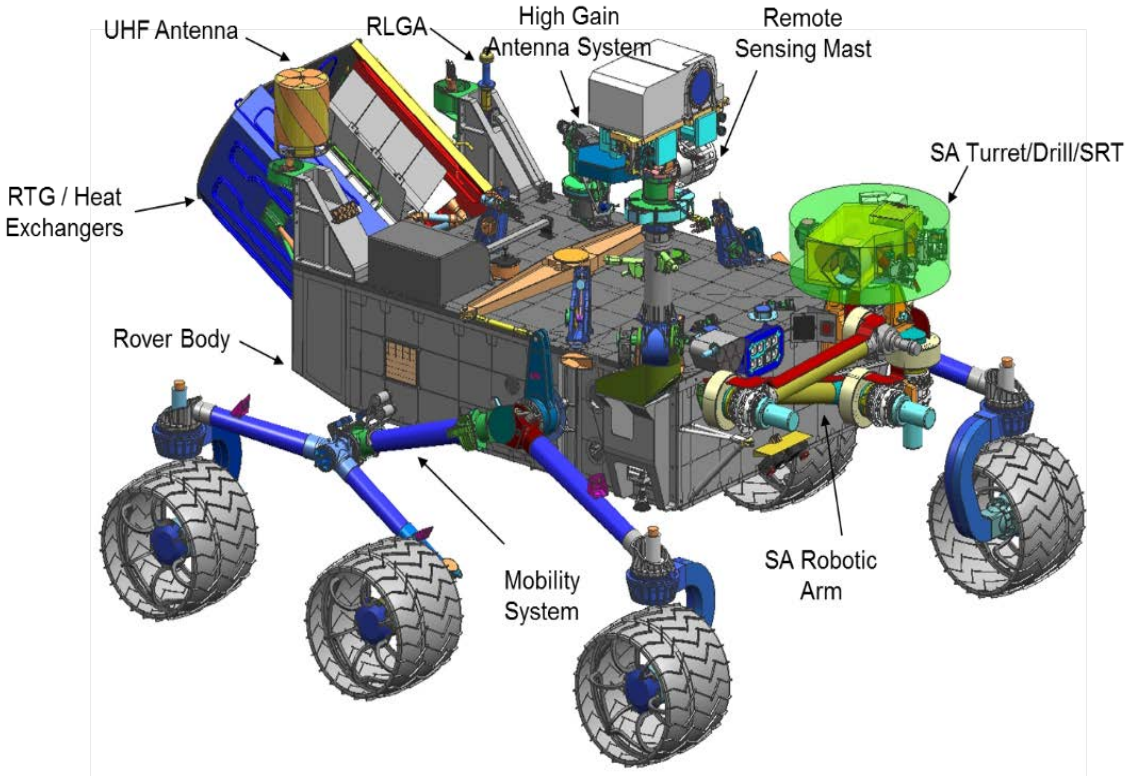

Electrical Integration

- Floating bus architecture keeps chassis isolated
- Battle Short (not shown) connects chassis to primary bus return

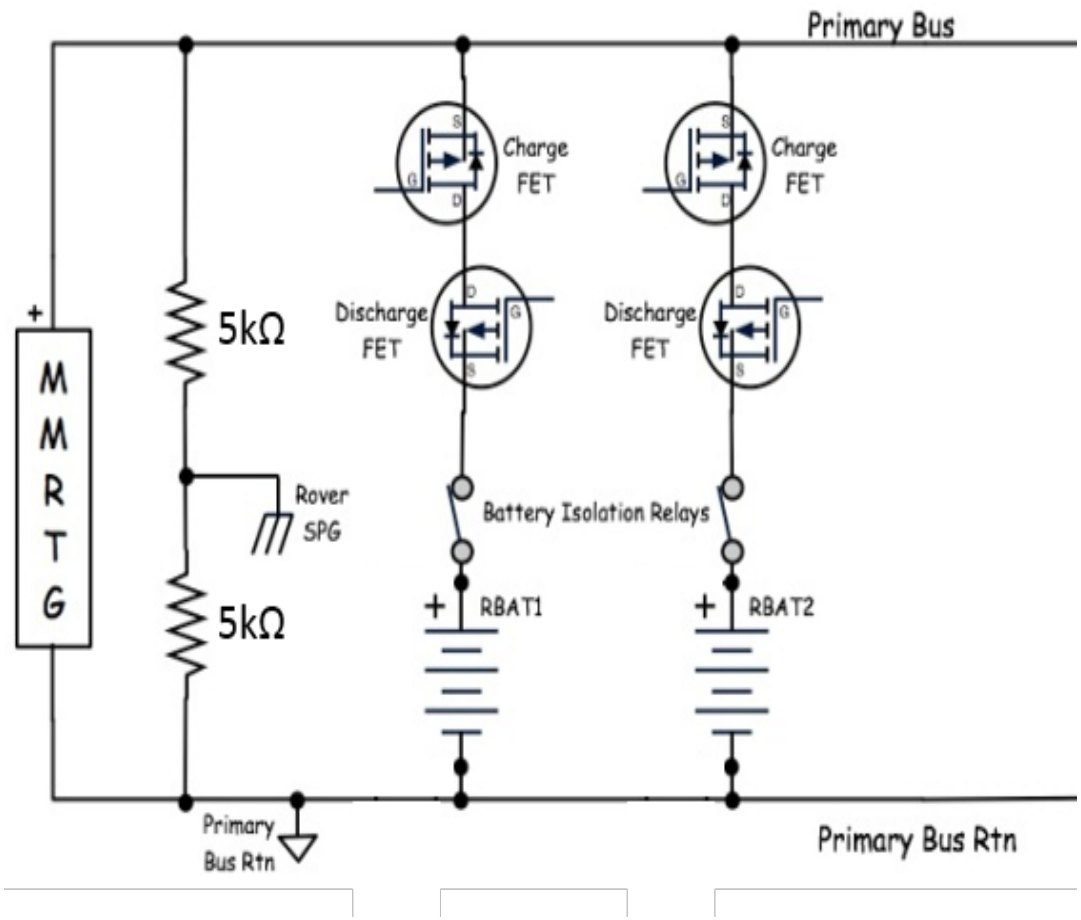

MMRTG Modeling

- Single-TE couple performance model
  - Couple performance is extrapolated to produce generator-level results
- Basic thermal model, steady state
- Degradation Modeling
  - Radioisotope decay
  - TE Property changes due to time at temperature
  - Additional extraneous resistance: Rextraneous
    - Function of time at temperature
    - Tuned to match actual Pout
- Rextraneous Tuning
  - Exponential fit to actual Pout
  - Exponential fit to modeled Pout
  - Rextraneous adjusted so exponential fits agree

Degradation Rate

- 4.62% exponential annual rate
  - $P(t) = P_0 e^{-rt}$
  - Note: Exponential rates are larger than straight-line rates
- Worse than initial design goal
- High rate is primarily due to increasing electrical resistance
  - Internal resistance measurements taken from the Engineering Unit (EU)
- Resistance increase thought to be occurring as contact resistance at the hot end of couples
- New version of MMRTG in development:
  - Better hot side electrical contact
  - Improved TE materials

Degradation Plot

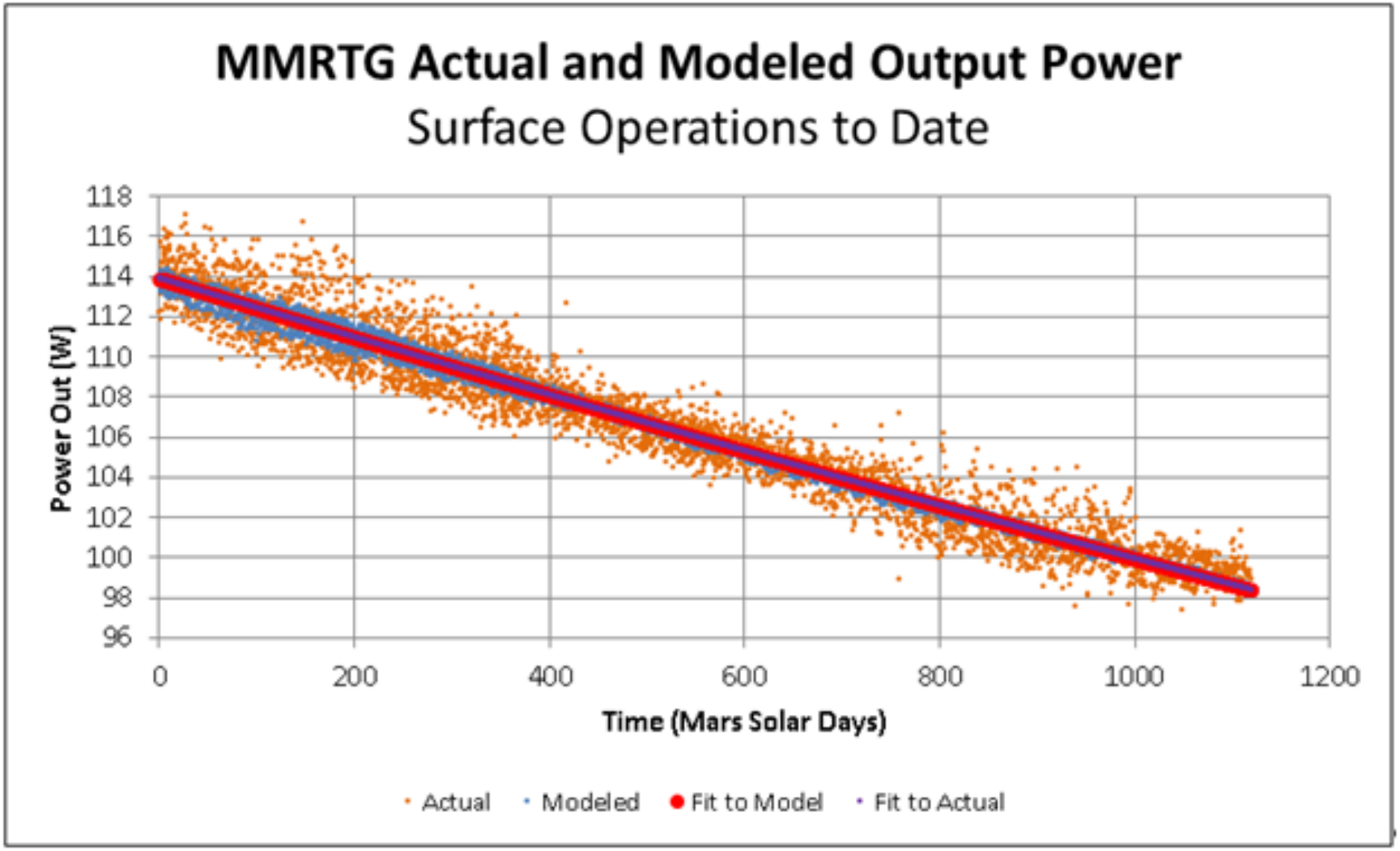

Drawback of Steady-State Thermal Modeling

- Wind causes sudden changes in fin root temperature (FRT)
  - Wind comes up most every evening
- Steady state model assumes that FRT has persisted indefinitely
  - MMRTG internals fully equilibrated
- In reality change in FRT takes time to equilibrate
  - Generator produces more or less power during equilibration
  - More power when FRT drops
  - Less power when FRT rises
  - Average Pout is not changed
- Difficult to do point-by-point model tuning

MMRTG Internal Shorting

- Occasional shorts occur between the TE couple stack and the MMRTG case.
  - Some are sporadic, some self-clear and some persist
- They cause:
  - a reduction in the voltage between the chassis and the power bus return
  - a small reduction in output current
- The change in chassis voltage can cause some activities to be suspended
- Suspension of activities causes loss of science return
- Assumed cause is migration of materials inside the generator due to high temperatures
- All missions that are capable of detecting shorts have seen them
- MSL is first mission capable of clearing them (Battle Short)
- Frequency of the chassis short is increasing

List of MMRTG Shorts Through Sol 1239

- 456 to 461 spontaneously cleared
- 816 to 836 cleared using battle short
- 1084 to 1085 spontaneously cleared
- 1089 to 1092 spontaneously cleared
- 1158 to 1167 cleared using battle short
- 1173 to 1182 cleared using battle short
- 1186 to 1192 cleared using battle short
- 1204 to 1223 cleared using battle short
- 1233 to 1239 cleared using battle short

Bus Balance Voltage Plot

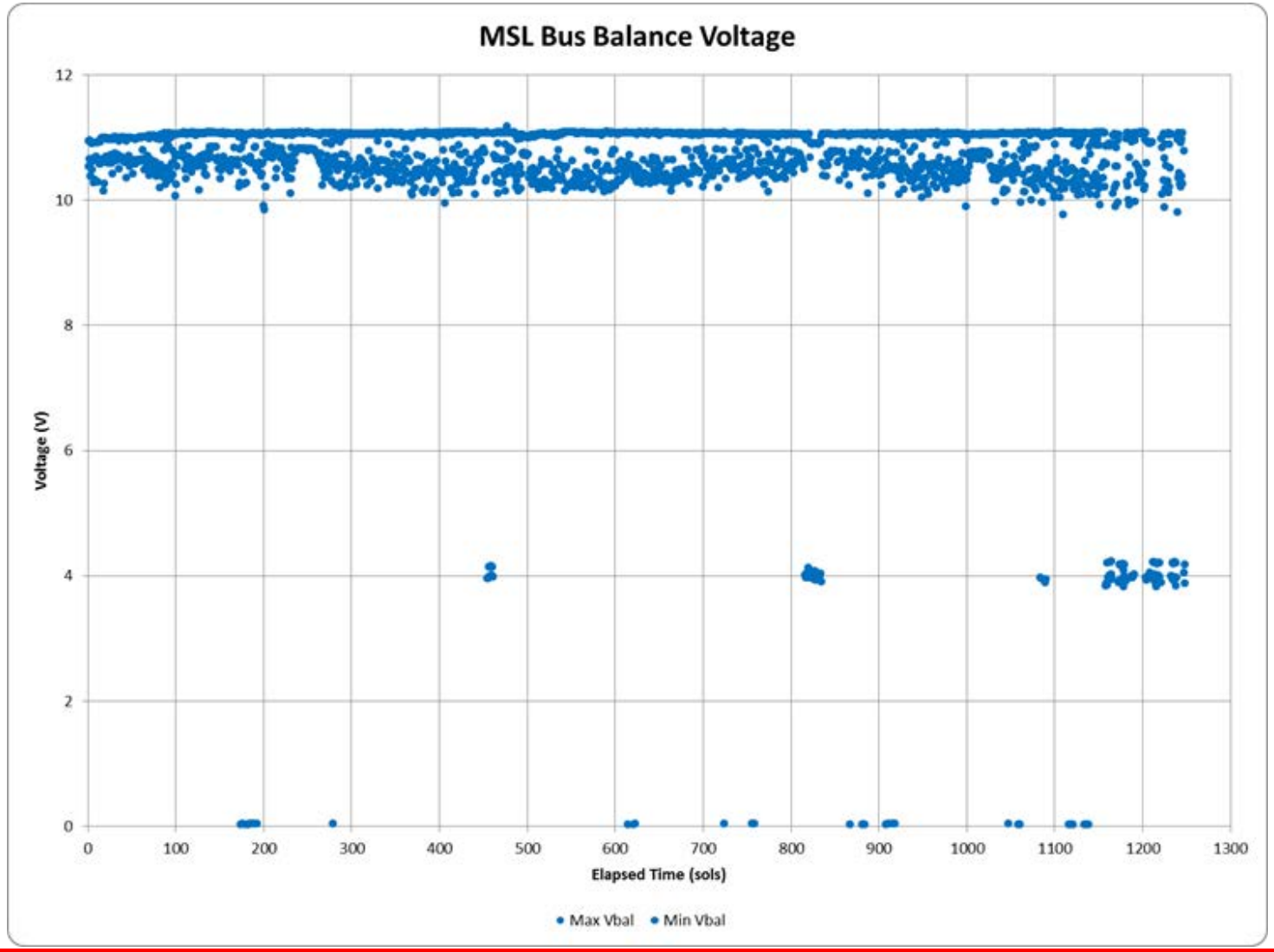

Management of MMRTG Shorts

- The first occurrence caused a good deal of consideration
- So far the shorts can be cleared by commanding a battle short
- This forces a larger current through the short, burning it out
- Present standard procedure:
  - Let short persist for three sols
  - Issue a battle short to clear the short
    - Take high-rate data to observe the current taken by the short before it clears
- Consideration being given to:
  - commanding battle shorts before sensitive activities
  - raising threshold at which activities are suspended due to chassis voltage perturbations

Summary

- Consistent output power has made power planning for surface operations far simpler than with solar-powered missions
- Internal shorting has caused some complexity in management but no real loss of capability
- The degradation rate is higher than the initial goal but will still support thousands of sols of useful operations

Acknowledgements

- I would like to thank Jennifer Herman, Ronald Hall, Andrew Mitchell, Paul Stella and Thomas Valdez, who make up the Power Engineering Operations team, for their contributions to this document and for their hard work in making the Mars Science Laboratory mission successful.
- We would like to thank Loren Jones, Gregory Carr, David Woerner, Thierry Caillat, Nicholas Keyawa, Gary Bolotin, Ryan Kinnett, Victor Moreno and Robert Zimmerman for technical discussions.
- The work described in this paper was carried out at the Jet Propulsion Laboratory, California Institute of Technology, under a contract with the National Aeronautics and Space Administration. The participants included the US Department Of Energy and its contractors, OSC, TESI, and Pratt-Whitney Rocketdyne.