Optical Ground Station 1 of the NASA Space Communications and Navigation Program

W. T. Roberts, D. Antsos , A. Croonquist, S. Piazzolla, L. C. Roberts Jr., V. Garkanian, T. Trinh, M. W. Wright, R. Rogalin, J. Wu, and L. Clare

Jet Propulsion Laboratory, The California Institute of Technology

© 2016 California Institute of Technology - Government Sponsorship Acknowledged

Laser Communications Relay Demonstration (LCRD)

- **Optical Ground Station 1 (OGS1) is being developed to support the LCRD project**
- **Capable of sustained bi-directional communications**
  - **Up to 1.24 Gbps – DPSK**
  - **Up to 311 Mbps – PPM**
- **LCRD Objectives**
  - **Demonstrate bi-directional optical communications**
  - **Characterize system performance over a variety of conditions**
  - **Transfer optical communication technology to industry**
  - **Support test and demonstrate optical communication standards**

OCTL Telescope

- **1-meter F/76 telescope in coudé configuration**
- **Fast-slewing El over Az mount for satellite tracking**
- **4 coudé ports allows concurrent experiments**
- **Designed for daytime operations**

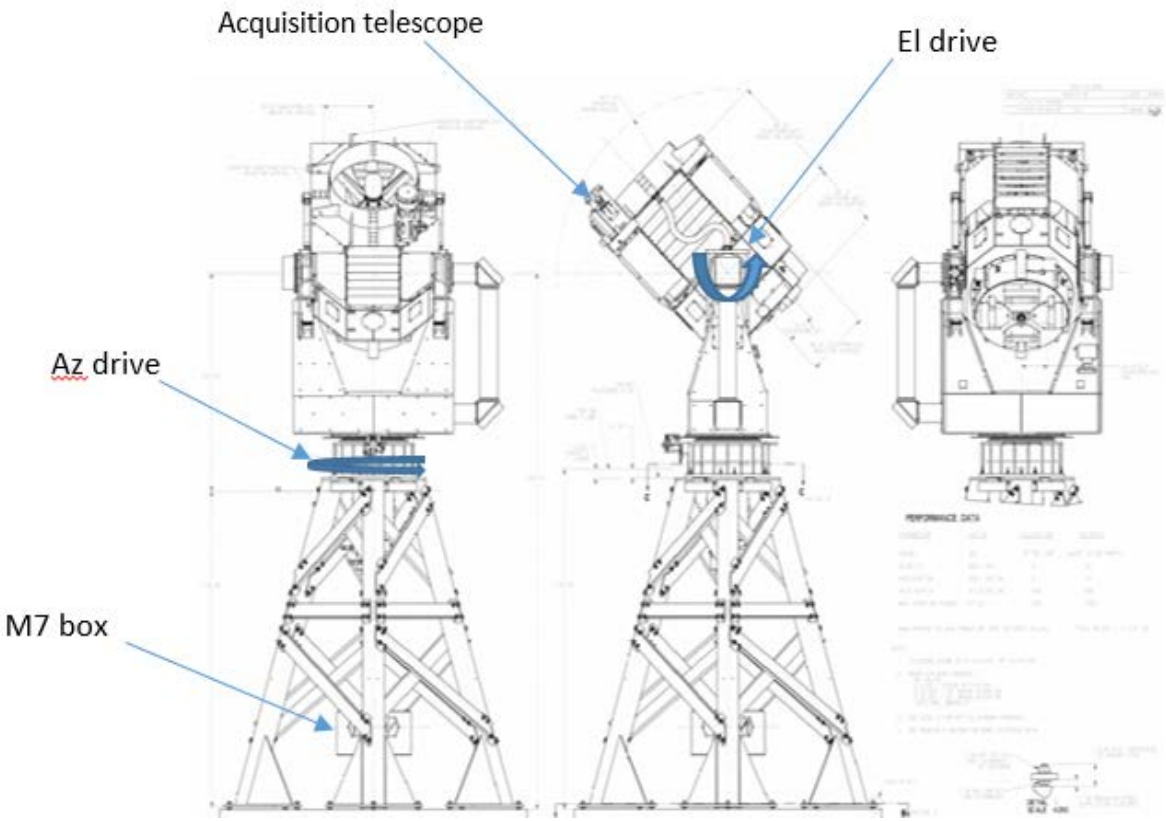

OGS1 System

- Telescope for signal collection and transmission
- Optics for beam control and signal coupling
- Laser safety system
- Beacon for acquisition by spacecraft
- Ground modem for signal retrieval and signal encoding
- Networking gateway for controlling services
- User simulators for evaluating system performance
- Atmospheric channel monitoring system to understand the link
- Monitor and control system for control and coordination

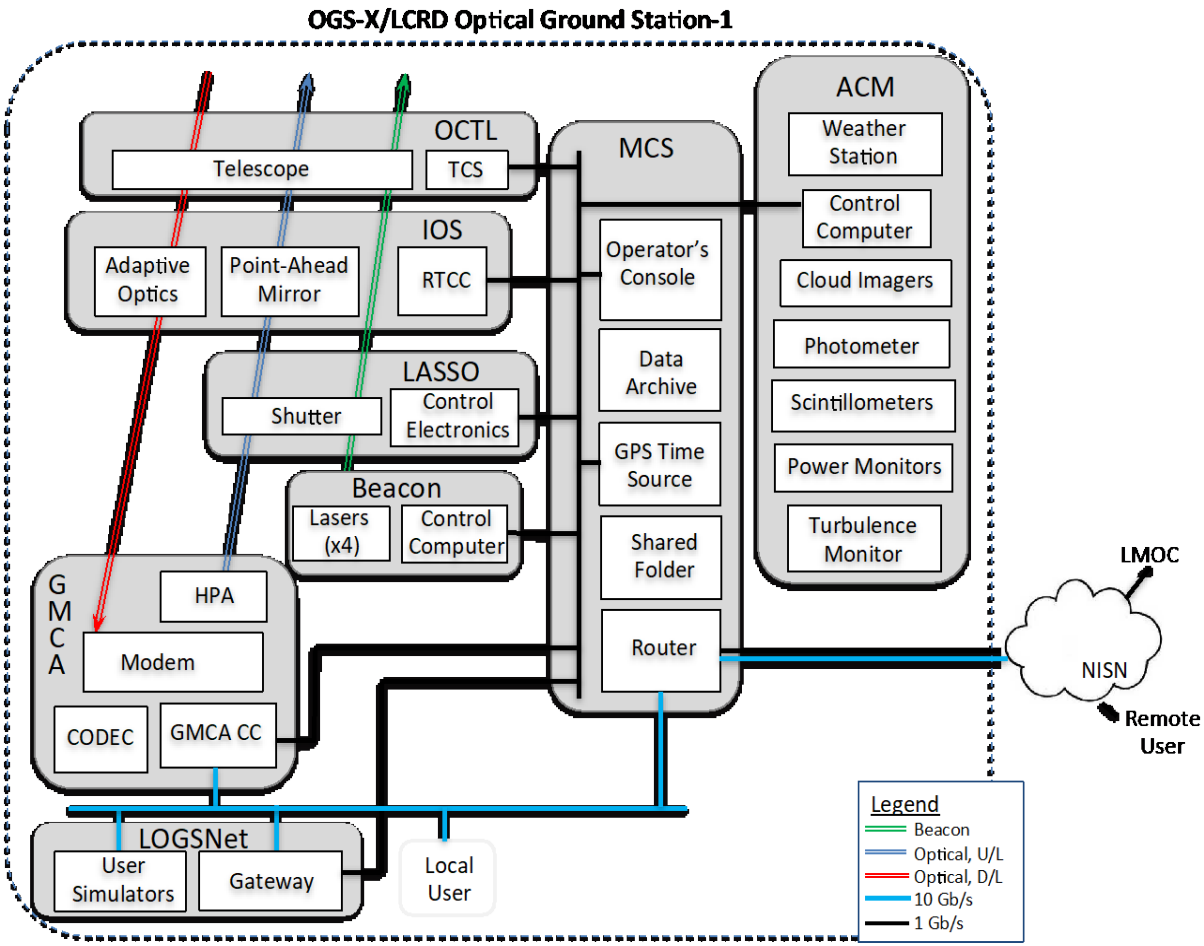

LCRD Service Provider Architecture

- **Ground users connect to OGS1 User Services Gateway (USG) to send and receive data**
- **Space-based user platforms connect directly to flight modems on LCRD spacecraft**
- **Network Operations Center coordinates services, schedules and traffic profiles**

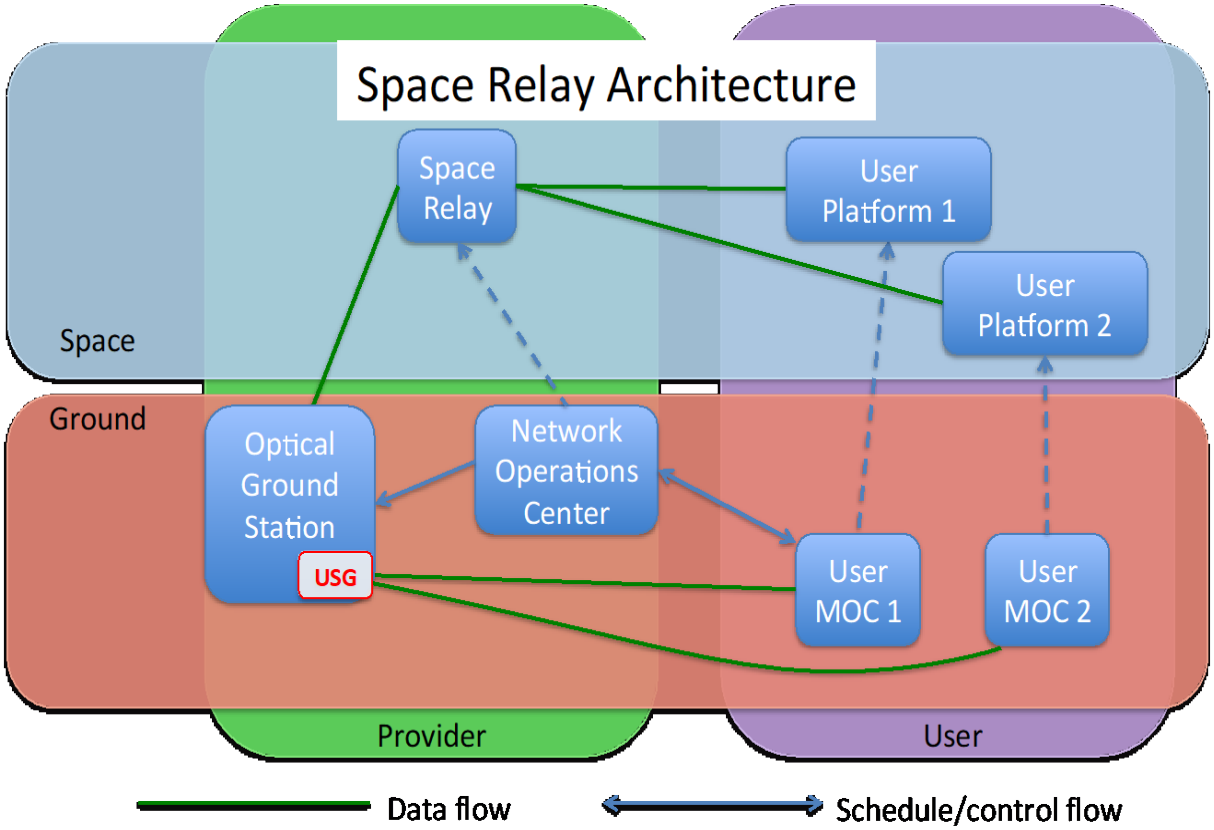

OGS1 Adaptive Optics System

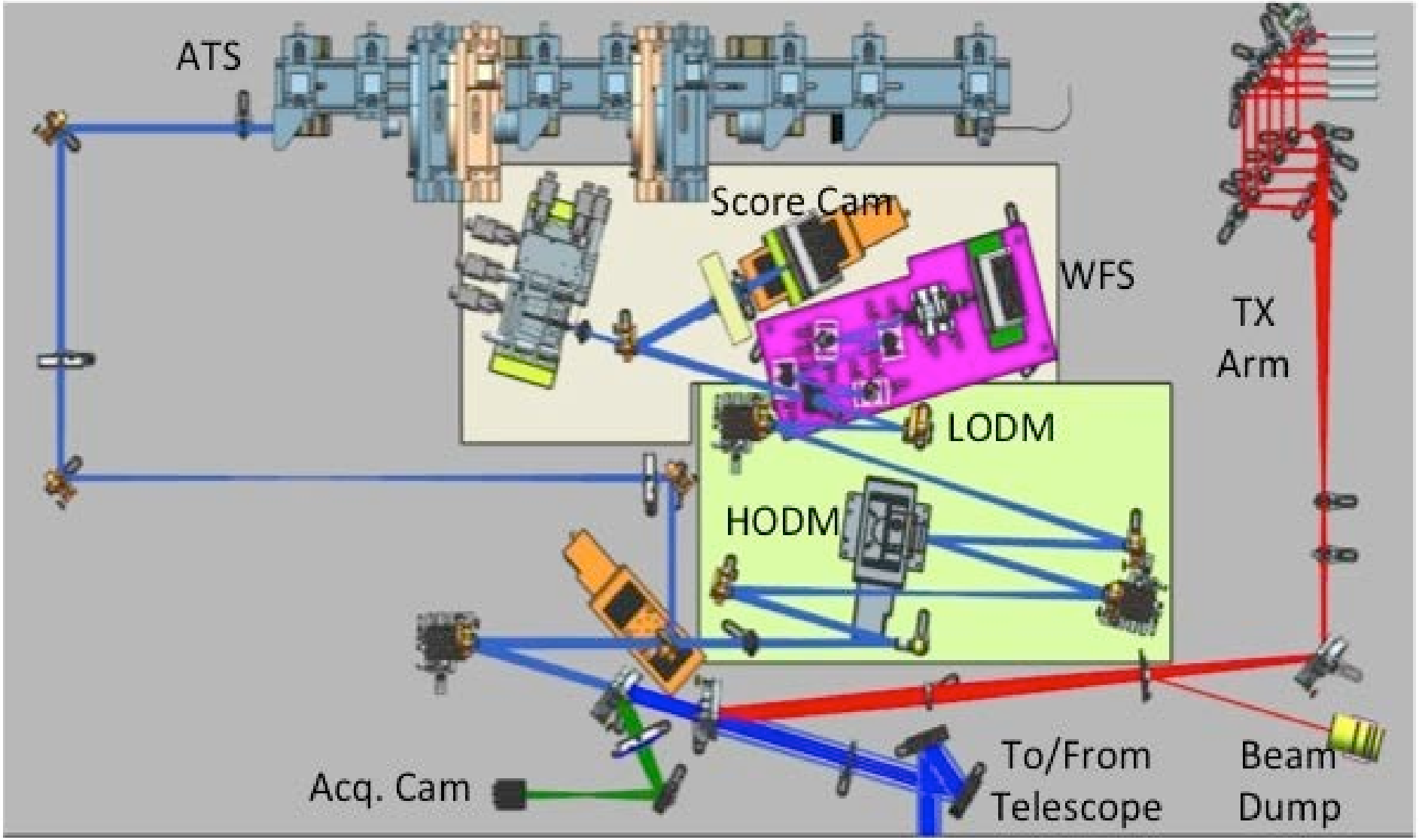

Predicted Coupling Efficiency

- **AO metric is SMF coupling efficiency**
- **Predicted efficiency under conditions of:**
  - **Green Line: r_0=5.2 cm (λ=500 nm), V_{wind} = 2.3 m/s, 20 degrees elevation**
  - **Red Line: r_0=2.7 cm (λ=500 nm), V_{wind} = 5.3 m/s, 20 degrees elevation**

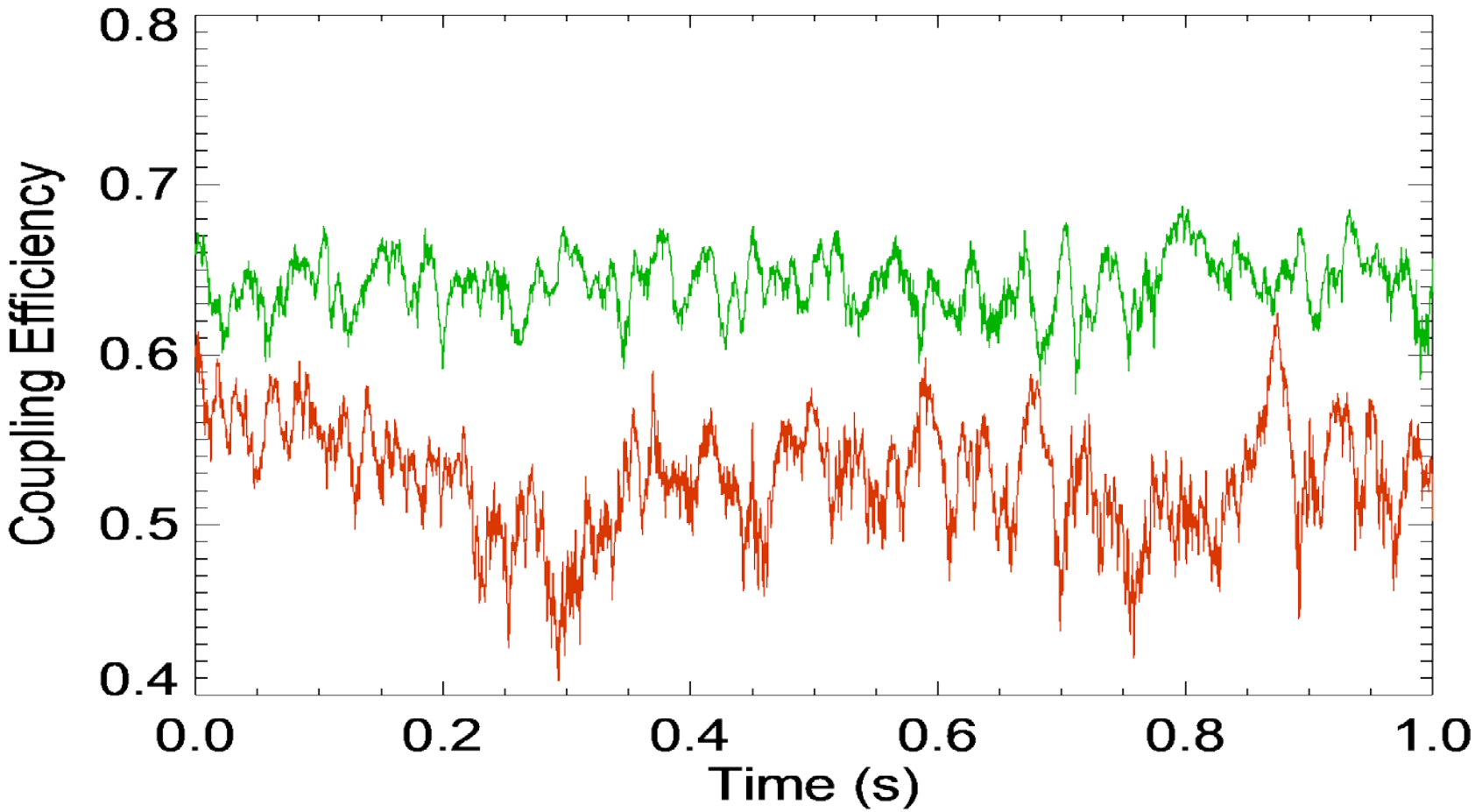

Laser Safety Shutter - LASSO

- All beams are blocked in laboratory by IOS enclosure
- All transmit beams pass through LASSO safety aperture
- Aperture is fail-safe design
  - All clear signal must be received to keep aperture open
  - Hooks for Radar, LWIR camera and USAF Laser Clearing House

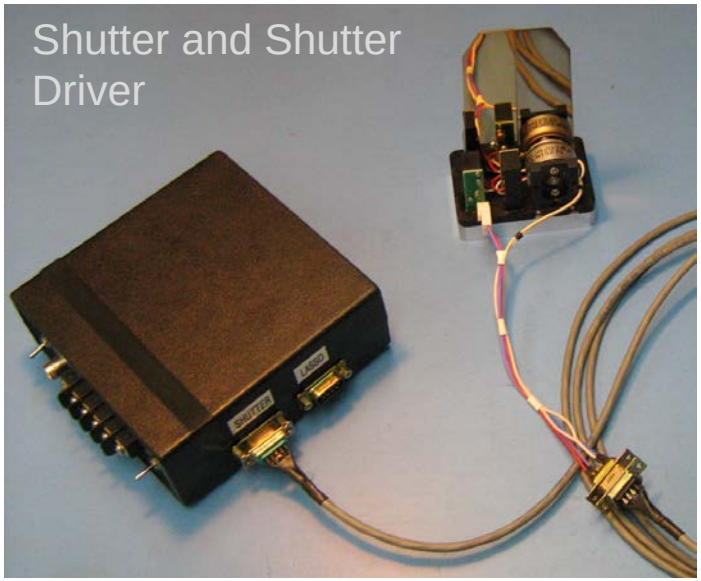

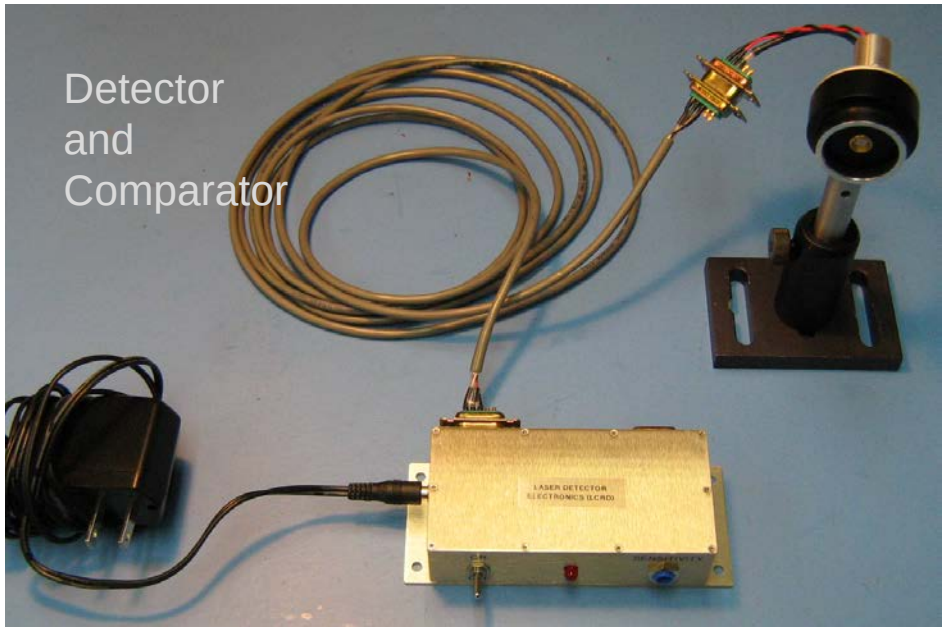

Ground Modem, Codec, Amplifier (GMCA)

- Being developed at Goddard Space Flight Center based on an MIT/Lincoln Laboratory design
- Modem for converting between optical pulses and electronic signals
- Codec for applying forward error correction coding and interleaving
- High power laser amplifier for generating high peak power transmit pulses

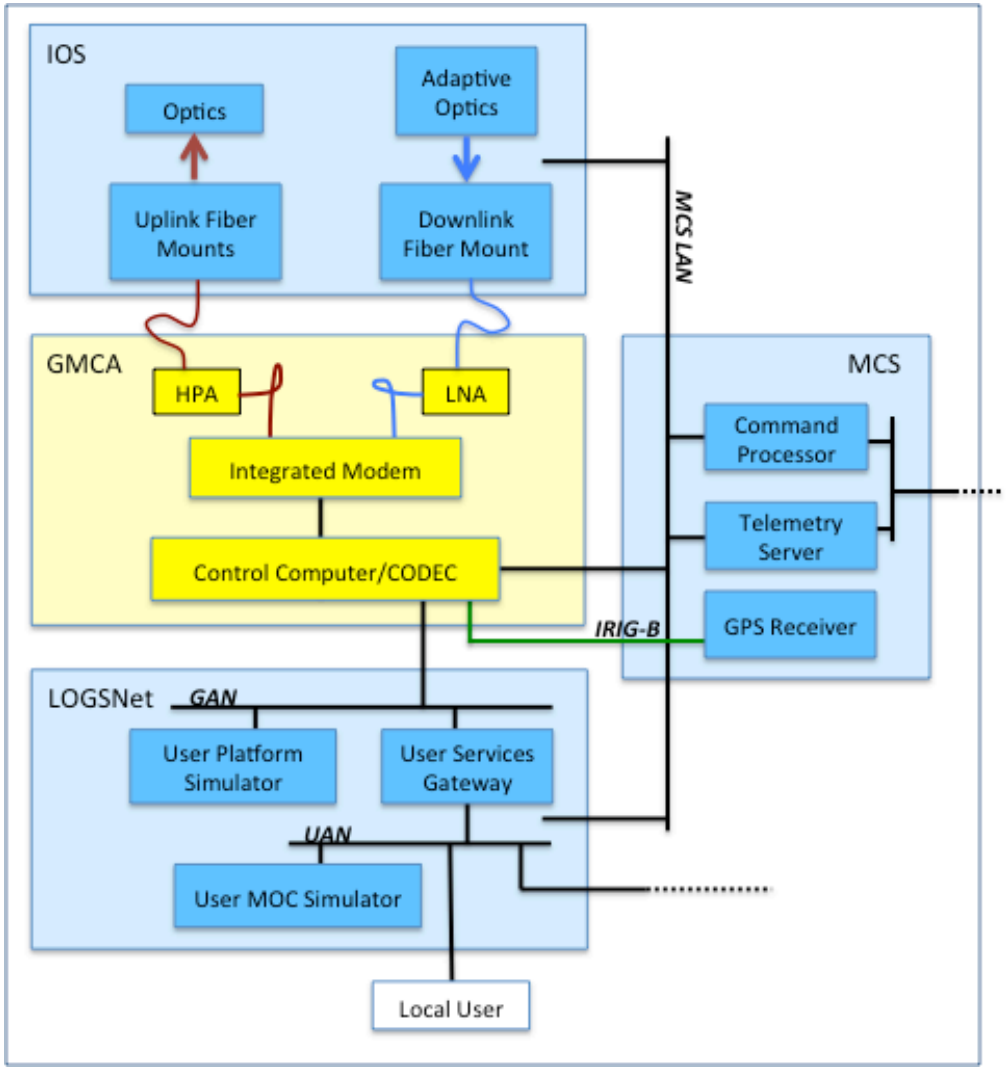

Atmospheric Channel Monitoring (ACM)

- **Integrated Instrumentation suite**
  - **Weather station**
  - **Cloud imagers**
  - **Photometer**
  - **Scintillometers**
  - **Signal power monitors**
  - **Turbulence monitor**
- **Continuously monitors atmospheric conditions**
- **Used to compare link performance against atmospheric conditions**
- **Operates day/night continuously**
- **Passes data along to MCS for storage**

ACM Cloud Imagers

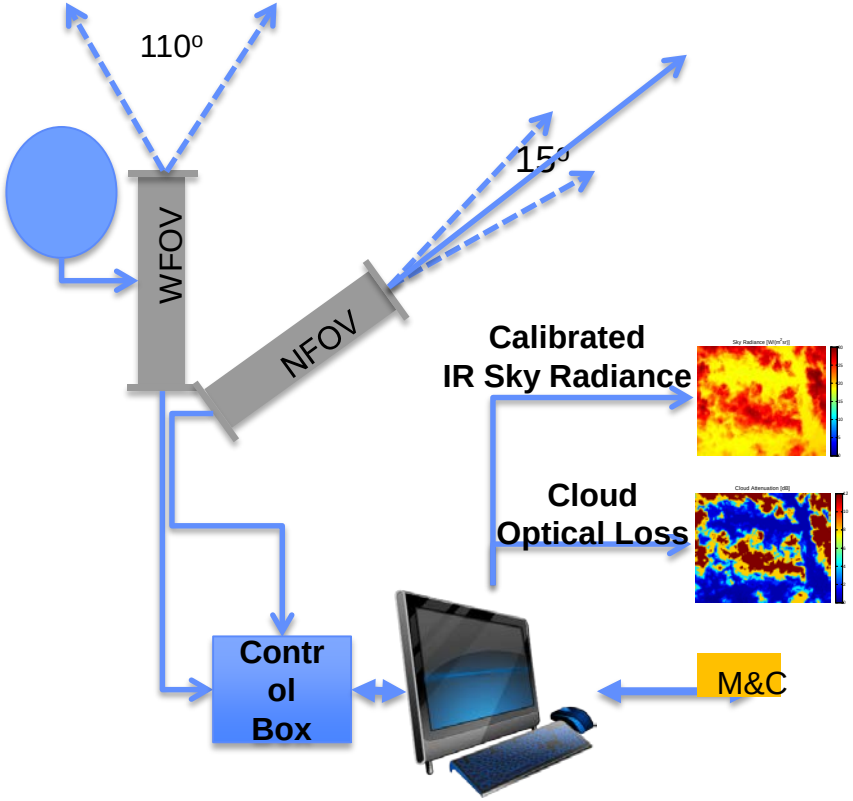

- **Two thermal IR sensors for day/night monitoring**
- **Measures cloud conditions**
  - **Average cloud cover over site**
  - **Along line of sight to spacecraft**

Cloud Imaging System Output

- **Continuously monitors cloud conditions**
- **Calibrated output shows**
  - **Measured cloud density**
  - **Sky radiance**

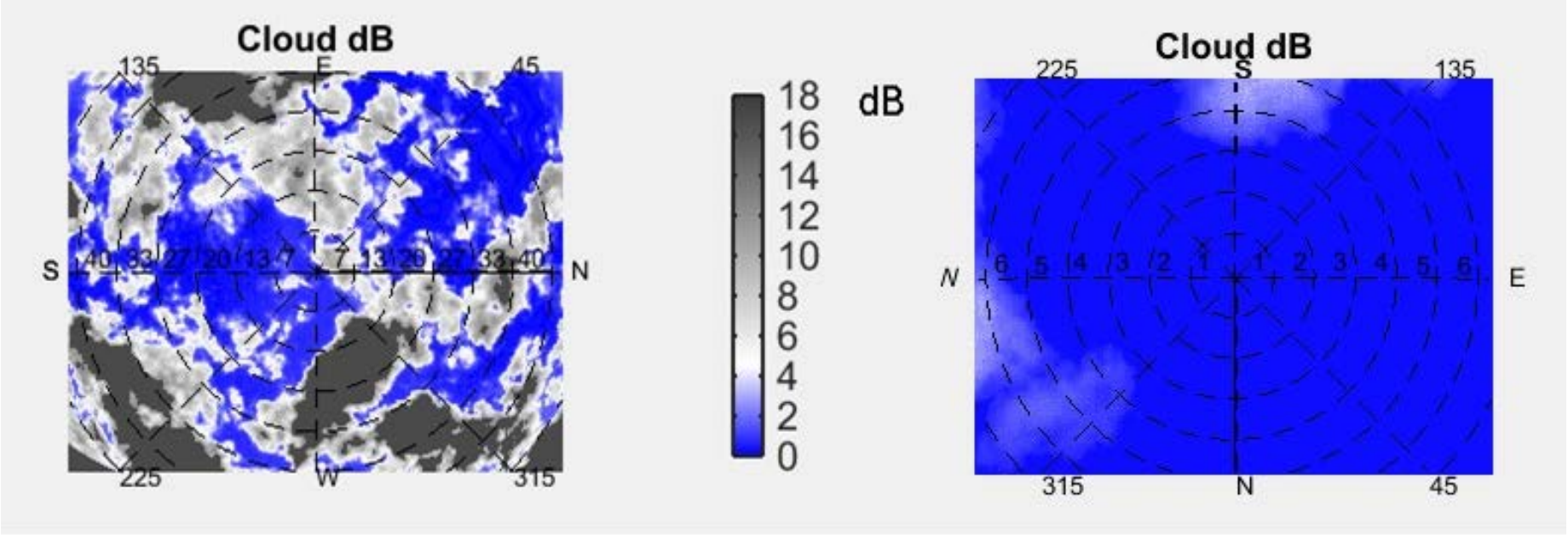

WFOV **NFOV**

Monitor and Control System

- **Backbone of OGS1 control and coordination**
  - **Distributes schedules and traffic profiles**
  - **Sequences simulations and user operations**
- **Ties the OGS1 system together**
  - **Commands each subsystem**
  - **Transfers messages, telemetry, commands and data**
  - **Coordinates data archival**

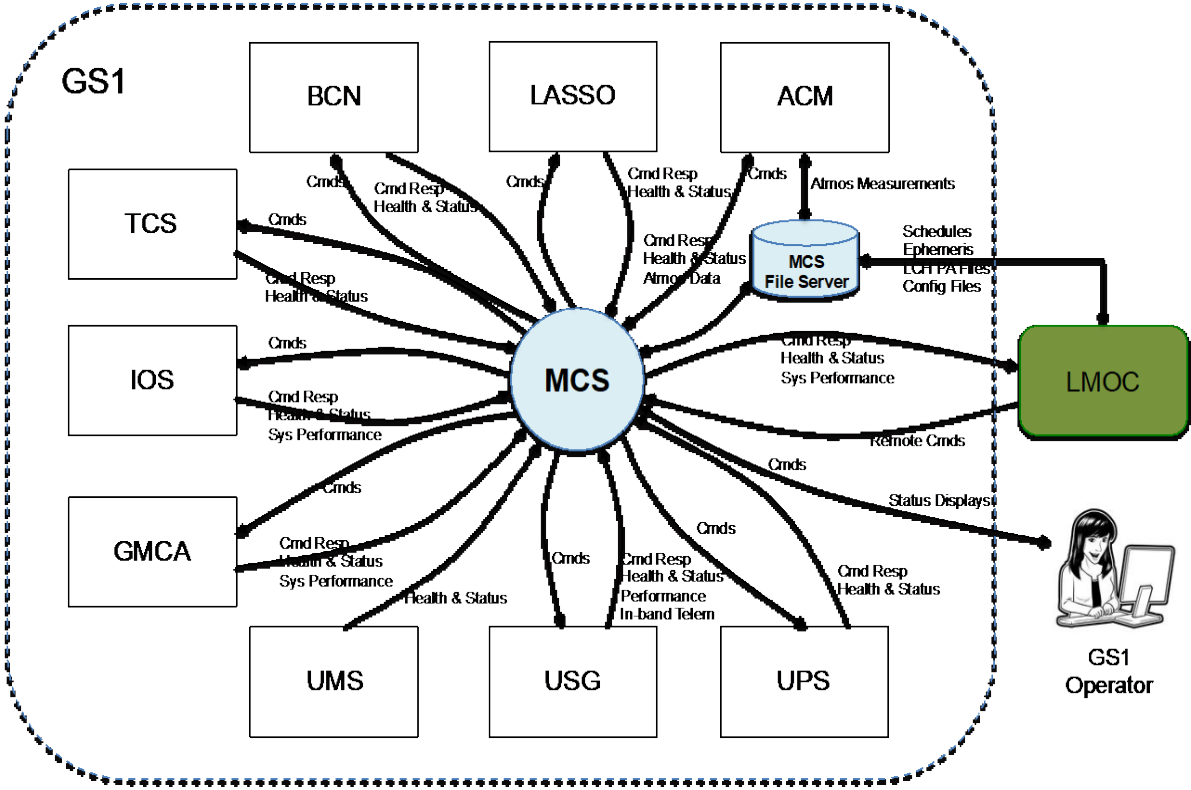

Primary external interface to
- LCRD Mission Operations Center
- ITOS data storage system

Summary

- **OGS1 is being developed to support LCRD**
- **High capability networking supports**
  - **Four different service types**
  - **Multiple simultaneous users**
- **Adaptive Optics system assures high signal capture efficiency**
- **Beacon beams support LCRD acquisition sequence**
- **Comprehensive instrument suite for monitoring atmospheric conditions for performance analysis**