OCO-2 Dispersion and Instrument Line Shape Trending

David Crisp Richard A. Lee (JPL/Caltech)
for the OCO-2 Calibration Team

January 2016

Copyright 2016 California Institute of Technology.
Government sponsorship acknowledged.

Impact of Thermal Transients on Dispersion

- The “dispersion,” specifies the mapping of the spectrum on the Focal Plane Array (FPA),

- Dispersion has two adjustable parameters – an offset and a linear stretch.
  - The offset changes with Doppler shift and displacements of the FPA relative to the optical bench
  - The linear stretch will change with changes in focus

- The L2 algorithm now retrieves both offset & linear terms for the dispersion from each science spectrum.
  - These factors are not currently recorded in the B7 L1B files
  - They may be included in the L1B files in next (B8) algorithm build

Known Dispersion Changes

- The offset term of the dispersion changes with Doppler shift and Focal Plan Array (FPA) displacements introduced by stresses imposed by the cryolinks on the FPA mount
  - Stress imposed by the cryolink strap varies from FPA to FPA, and with cyrocooler load, which varies with ice contamination level and other factors

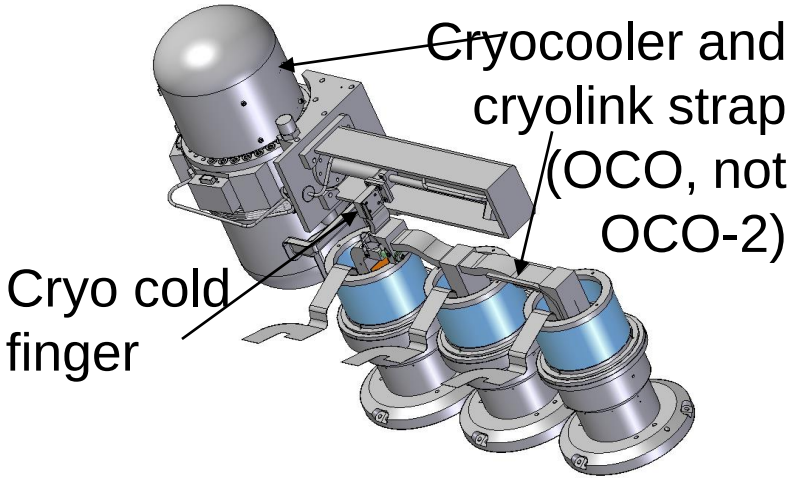

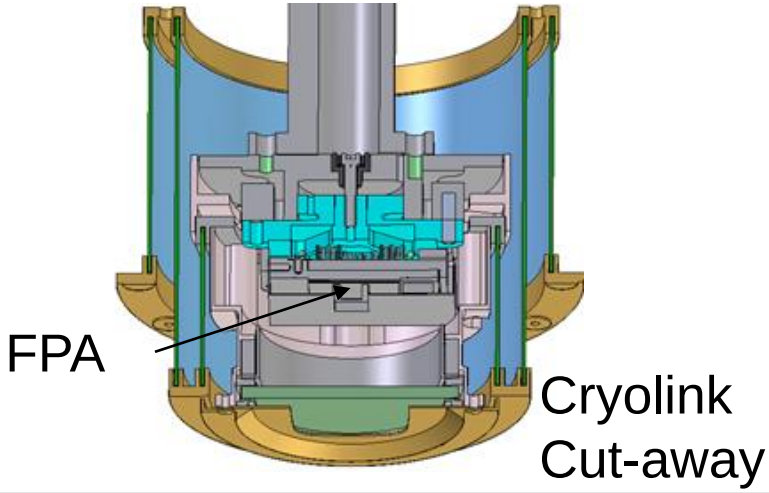

Known Dispersion Changes

- **The linear stretch is influenced by thermal gradients, across the Optical Bench Assemble(OBA), that warp the OBA and tilt the grating angle by a few nanometers.**
  - **Consistent across all 3 bands**

Optical Bench
Side View

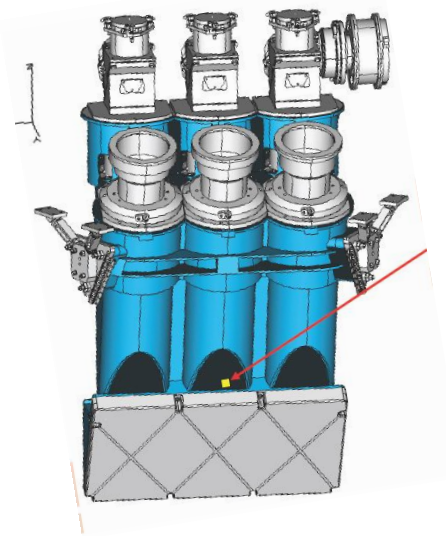

Optical Bench
Cutaway (side view)

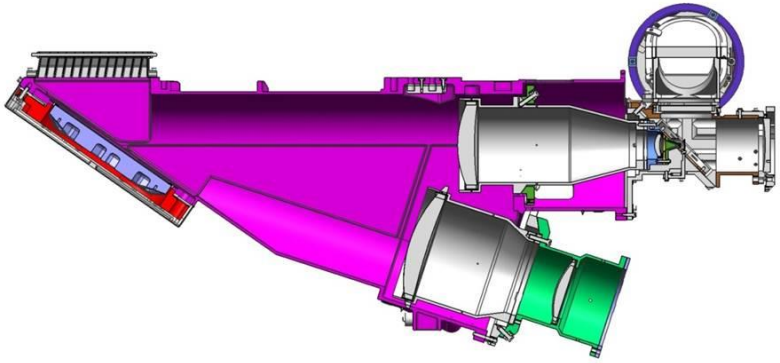

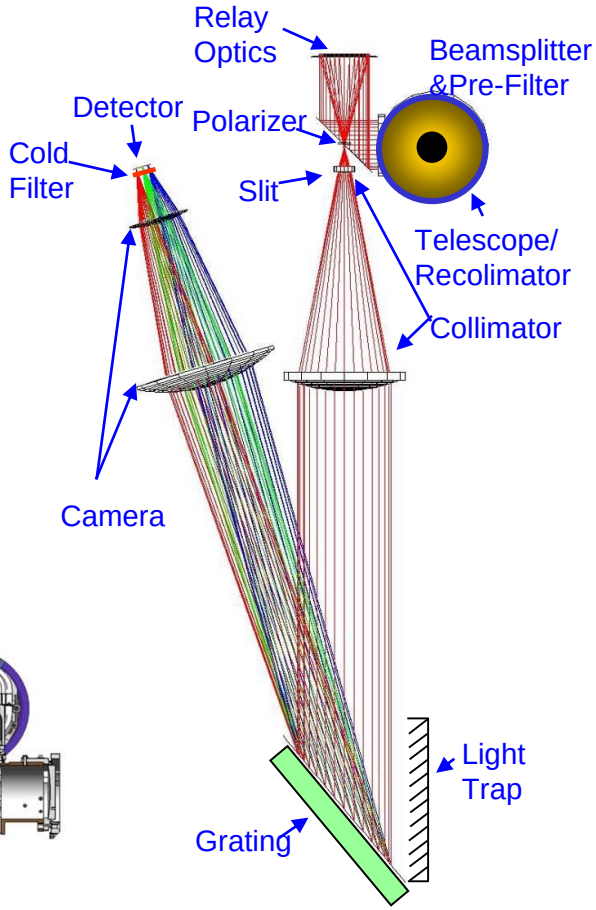

Optical path.

ABO2 Offset

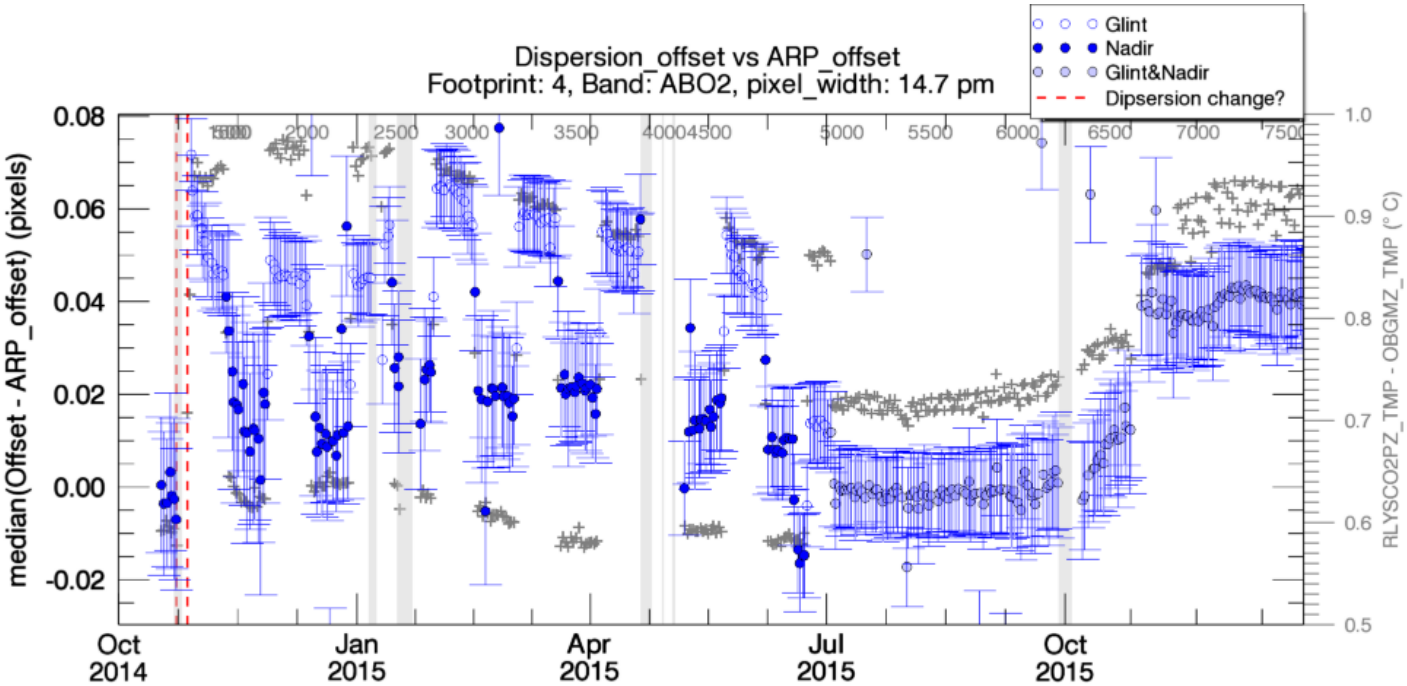
Dispersion_offset vs ARP_offset
Footprint: 4, Band: ABO2, pixel_width: 14.7 pm
Glint
Nadir
Glint&Nadir
Dipsersion change?
median(Offset - ARP_offset) (pixels)
RLYSCO2PZ_TMP - OBGMZ_TMP (° C)
0.08
0.06
0.04
0.02
0.00
-0.02
1.0
0.9
0.8
0.7
0.6
0.5
2000
2500
3000
3500
4000
4500
5000
5500
6000
6500
7000
Oct 2014
Jan 2015
Apr 2015
Jul 2015
Oct 2015

ABO2 Linear Stretch

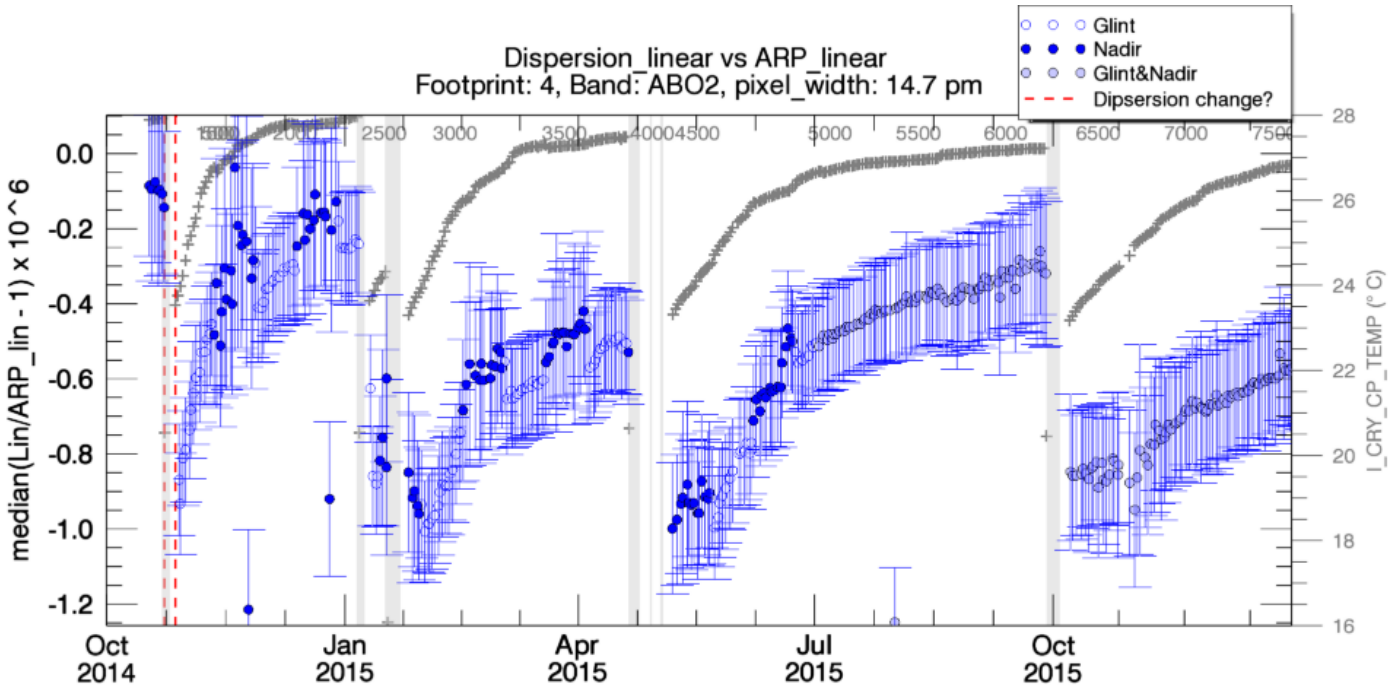

WCO2 Offset

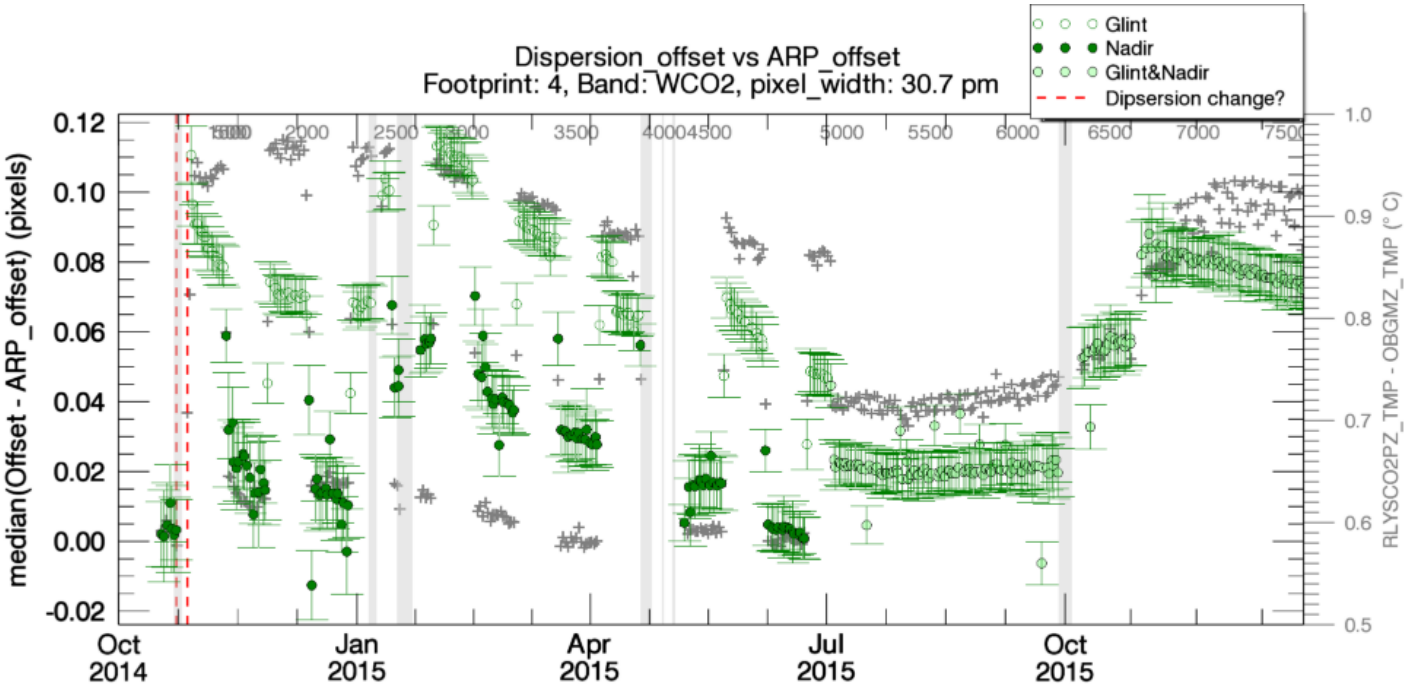
Dispersion_offset vs ARP_offset
Footprint: 4, Band: WCO2, pixel_width: 30.7 pm
Glint
Nadir
Glint&Nadir
Dipsersion change?
median(Offset - ARP_offset) (pixels)
RLYSCO2PZ_TMP - OBGMZ_TMP (° C)
0.12
0.10
0.08
0.06
0.04
0.02
0.00
-0.02
1.0
0.9
0.8
0.7
0.6
0.5
2000
2500
3000
3500
4000
4500
5000
5500
6000
6500
7000
7500
Oct 2014
Jan 2015
Apr 2015
Jul 2015
Oct 2015

WCO2 Linear Stretch

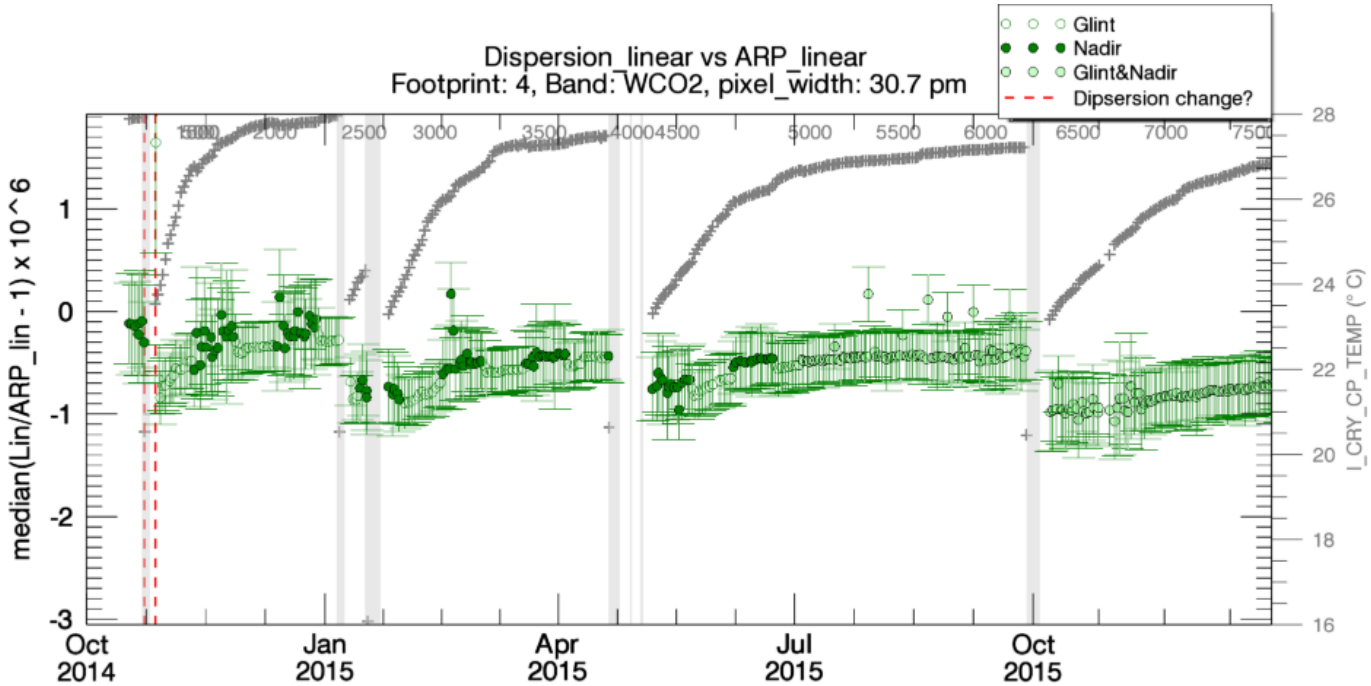

SCO2 Offset

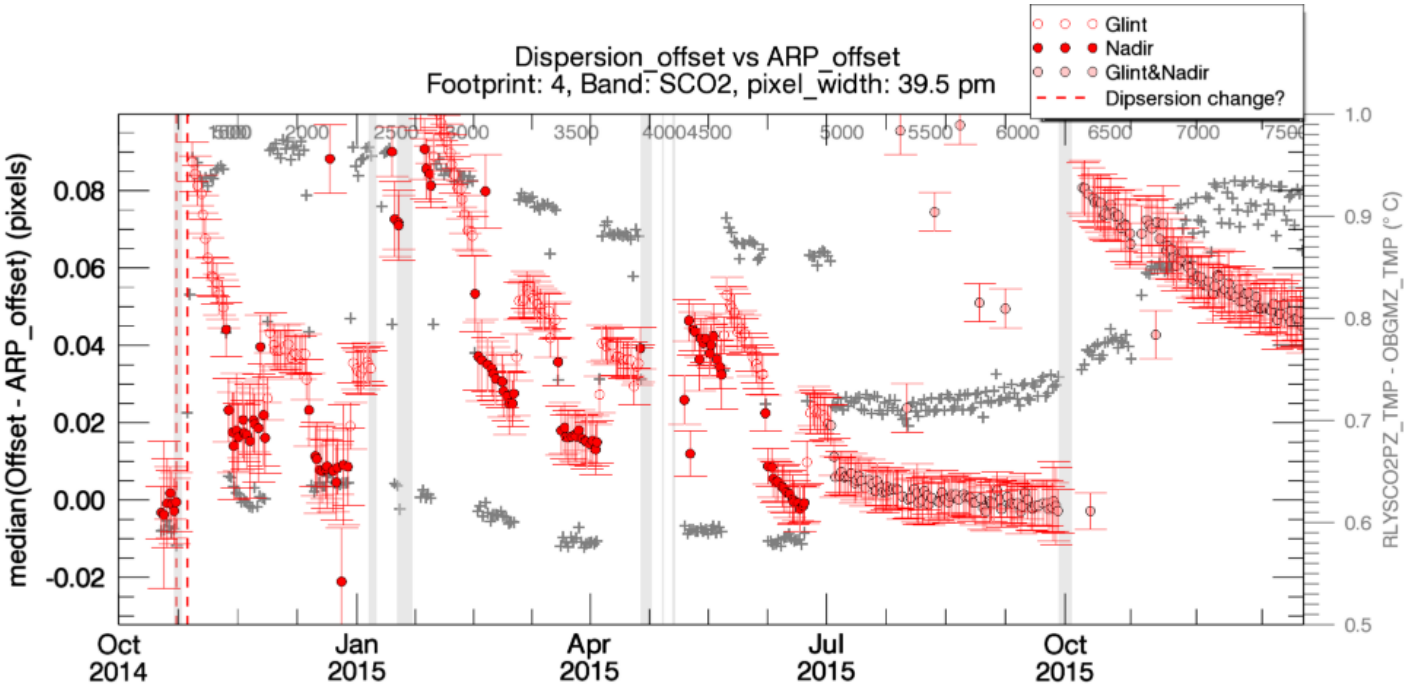
Dispersion_offset vs ARP_offset
Footprint: 4, Band: SCO2, pixel_width: 39.5 pm
Glint
Nadir
Glint&Nadir
Dipsersion change?
median(Offset - ARP_offset) (pixels)
0.08
0.06
0.04
0.02
0.00
-0.02
RLYSCO2PZ_TMP - OBGMZ_TMP (° C)
1.0
0.9
0.8
0.7
0.6
0.5
2000
2500
3000
3500
4000
4500
5000
5500
6000
6500
7000
Oct 2014
Jan 2015
Apr 2015
Jul 2015
Oct 2015

SCO2 Linear Stretch

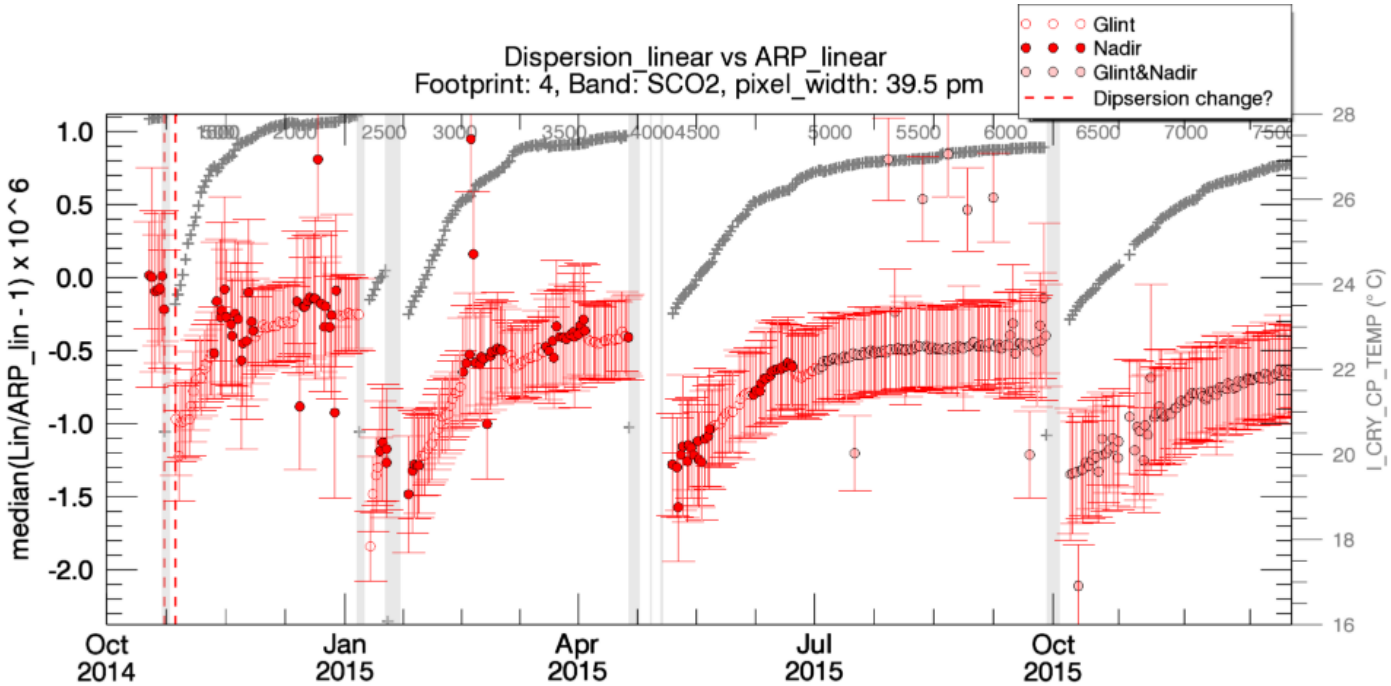

The Solar Calibration Assembly

- The solar calibrator may contribute apparent changes in the ILS for solar observations because
  - The solar calibrator does not fully illuminate the pupil (e.g. the primary mirror of the entry telescope)
  - The illumination pattern is not perfectly repeatable because the calibration mechanism is attached to the spacecraft body, and not the optical bench
  - The solar calibrator may move somewhat relative to the entry pupil as the temperature of the spacecraft panel changes (with season and illumination geometry)

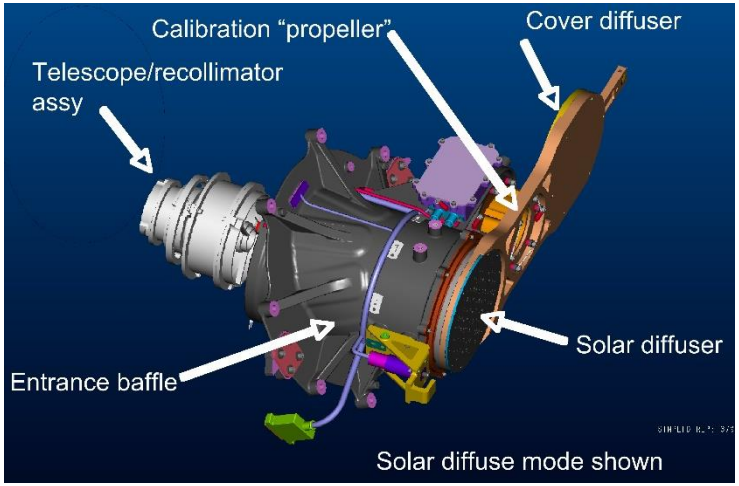

Calibration assembly (dark grey) shown with the solar calibrator (gold) rotated over the telescope aperture for solar calibration. The telescope assembly is attached to the optical bench. The diffuser is attached to a spacecraft panel.

Illumination pattern produced by the diffuser. The illumination does not uniformly fill the pupil.

OCO-2 Instrument Line Shape (ILS) Expression

- Each OCO-2's ILS is based on many parameters, several of which vary with wavelength or field angle
  - Analytic functions match the measured to some extent, but not exactly as the model does not capture detailed optical aberrations, filter performance, etc.
  - The ILSs are therefore expressed as a series of look-up tables
- Each of the 3 bands, 8 footprints and 1,016 columns has its own look up table with 200 wavelength and 200 responses (**9,753,600** values)

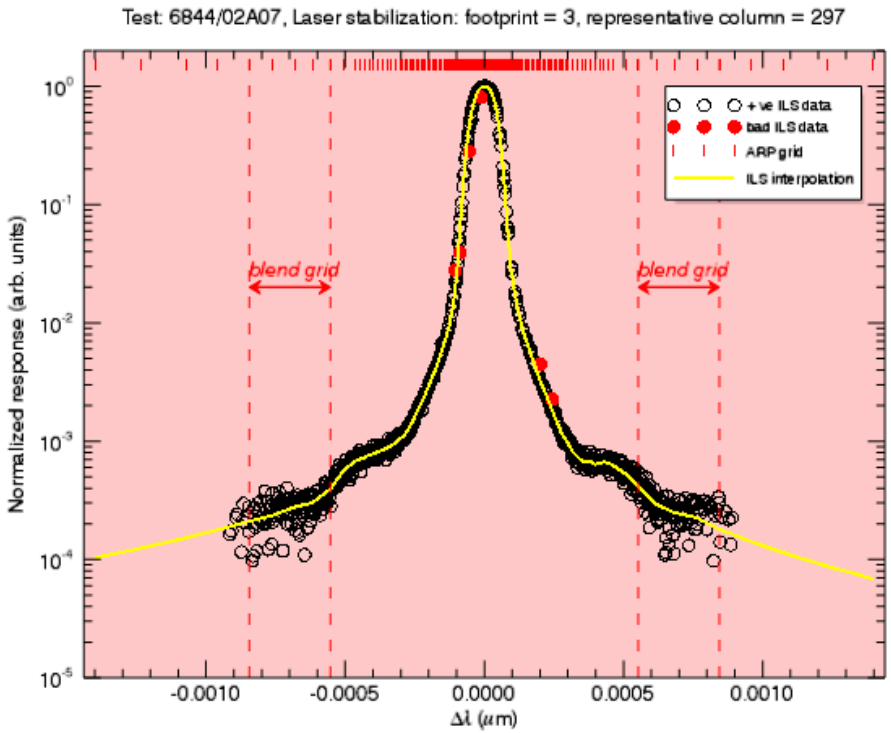

An individual SCO2 ILS is plotted on a logarithmic scale.

Use of Analytic ILS Functions

- Analytic ILS functions were tested for OCO, but abandoned because the actual ILSF is irregular, and the analytic ILS functions produced unacceptable residuals in fits to atmospheric spectra taken prior to launch.

- The tabular ILS values were subsequently adopted for both OCO and OCO-2

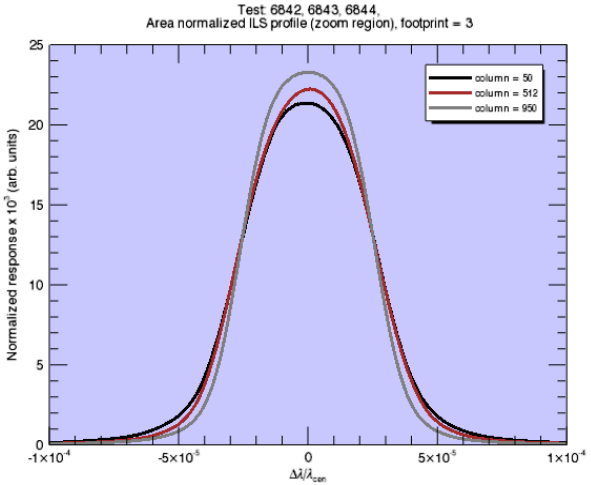

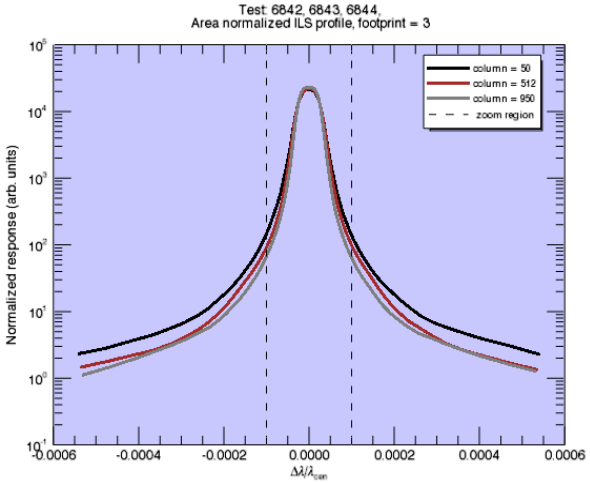

Three of the ABO2 8000 ILSF's are plotted on a linear (top) and logarithmic scale (bottom).

Monitoring the ILS: Solar Doppler Calibration

- **Variations in the ILSF are tracked using full-orbits of solar spectra (with +/- 7 km/sec Doppler shifts) to produce a very highly-sampled OCO-2 ILSF**

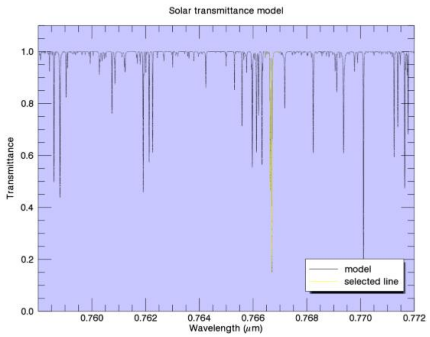

Synthetic solar spectrum

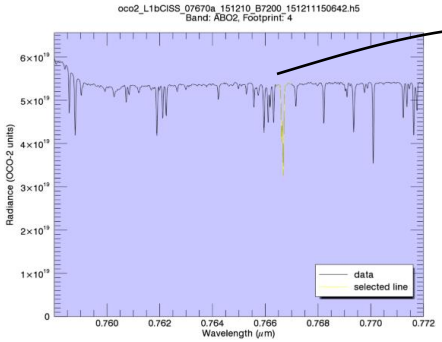

Measured solar spectrum

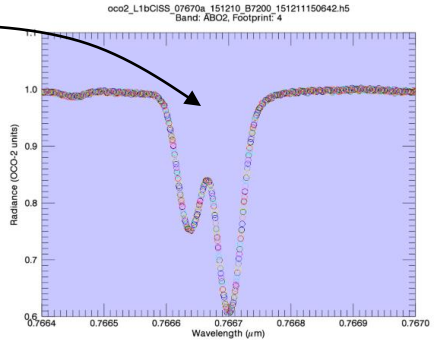

Single line from Doppler sampled solar spectrum

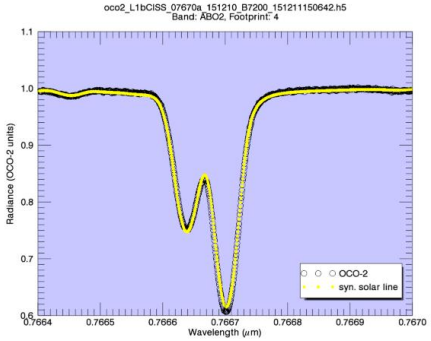

Doppler sampled spectrum (black) overplotted by synthetic spectrum (yellow).

A very highly over-sampled solar spectrum, incorporating Doppler shifted spectra from an entire, day-side orbit, is subtracted from a high resolution synthetic solar spectra (convolved with the OCO-2 ILSF). Differences in residuals are tracked to identify ILSF changes.

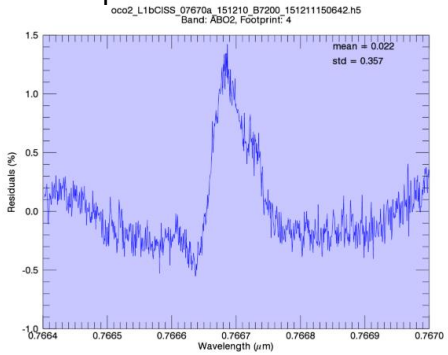

Residuals between Doppler sampled and synthetic spectrum.