High Temperature Boost (HTB) Anode Power Supply for a Modular and Scalable Power Processing Unit

Gregory A. Carr[1], Christopher J. Iannello[2], Don J. Hunter[1], Jean-Marie Lauenstein[3], Stanley A. Ikpe[4], Lawrence L/ Ludwig[2], Christopher Stell[1], Tuan Vo[1], Linda Del Castillo[1], Carissa Weber[1], Mohammad M. Mojarradi[1], Yuan Chen[4]
[1]Jet Propulsion Laboratory, California Institute of Technology, Pasadena, CA 91109
[2]NASA Kennedy Space Center, Cocoa Beach, FL 32899
[3]NASA Goddard Space Flight Center, Greenbelt, MD
[4]NASA Langley Research Center, Hampton, VA 23681

***Abstract* — A concept of a modular and scalable 10kW to 80kW High Temperature Boost (HTB) Power Processing Unit (PPU) capable of operating at temperatures beyond the standard military temperature range was proposed for solar electric in-space propulsion. Within the PPU, the Anode Power Supply (APS) module is a 10kW modular power stage and is the key to the HTB PPU. This paper is to present the design, development, fabrication, testing and thermal demonstration of the 10kW HTB APS. The system architecture and the paradigm shift of the HTB PPU is also to be described. In addition, the extreme environments electronic and packaging technologies are addressed as the fundamental technology path. The HTB PPU is intended for power processing in the area of space solar electric propulsion, where reduction of in-space mass and volume are desired, and sometimes even critical, to achieve the goals of future space flight missions. The concept of the HTB PPU can also be applied to other extreme environment applications, such as geothermal and petroleum deep-well drilling, where higher temperature operation is required.**

TABLE OF CONTENTS

1. INTRODUCTION 1
2. ARCHITECTURE AND POWER CONVERSION 1
3. 10KW ANODE POWER SUPPLY 3
4. EXTREME ENVIRONMENT ELECTRONICS 4
5. SUMMARY 4
6. ACKNOWLEDGEMENT.....4
REFERENCES.....5

1. INTRODUCTION

High power solar electric propulsion systems are required for NASA's next generation deep space and human exploration missions. A concept of a modular, power scalable and extreme environment technology enabled High Temperature Boost (HTB) Power Processing Unit (PPU) has been proposed [1-2]. The concept relies on the new approaches applied in system and topology designs and operating the HTB PPU at a higher power switch junction temperature of 160°C, which can only be realized with the emerging extreme environments technologies. It should be noted that, unlike other extreme environment applications where the operating temperatures are beyond military temperature range, such as geothermal and petroleum deep-well drilling, the solar electric propulsion system does *not* need to operate at higher temperatures. However, by using and taking advantage of the emerging extreme environment technologies, the high temperature operation and the new system and power conversion design can have 75% in-space mass saving for the overall solar electric system. This is one example where the new extreme environment technologies provide the critical path to the next generation power processing for both conventional and extreme temperature environments, not only in space missions but also in other applications.

Within the PPU, the Anode Power Supply (APS) module is a 10kW modular power stage and is the key to the HTB PPU. This paper is to describe the system architecture and power conversion in Section 2, present the design, development, fabrication, testing and thermal demonstration of the 10kW HTB APS in Section 3, and address the extreme environments electronics technologies in Section 4. A summary is provided in Section 5.

2. ARCHITECTURE AND POWER CONVERSION

The power processing unit for the solar electric propulsion system is shown in Figure 1 [1-2]. The system architecture is designed for modularity, scalability, flexible integration, flexible test scenarios, and re-workability to reduce spacecraft volume and mass.

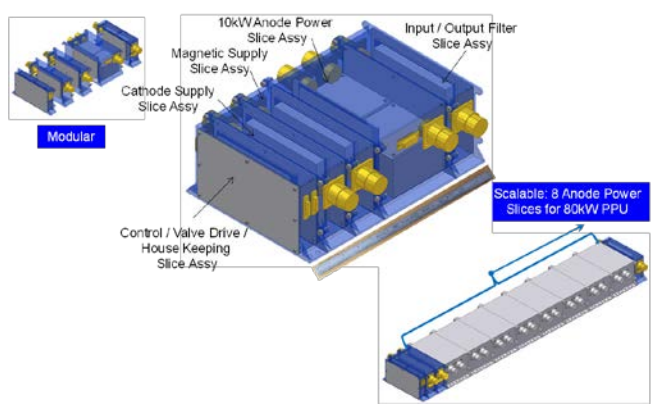

Figure 1. Modular and Scalable HTB PPU System

978-1-4673-1813-6/13/$31.00 ©2013 IEEE

Modularity

Shown in Figure 1, the configuration implements a packaging baseline architecture consisting of five horizontally mounted Al slices, each measuring 208.7mm (8.2in) x 110.0mm (4.3in). The five slices corresponds to the five functional modules. Input/output filter slice provides additional filtering beyond the Anode Power Supply. The Anode Power Supply provides the high voltage power to the anode. The Magnetic Supply provides a controlled constant current for the Hall thruster inner and outer magnets. The Cathode heater and keeper supply will activate the cathode. The Control/Valve Driver Slice provides the command interface and flow control signal. Slice-to-slice and slice-to-radiator retention are achieved through bolted interfaces.

Scalability

The architecture is easily scaled to the required power levels by adding the appropriate number of slices. Since all modules are bolted mechanically, and can be separated as five individual modules. The four modules, i.e. Magnetic Supply, Cathode Supply, Control/Valve Drive/House Keeping Supply, and Input/output Filter, are designed to support up to eight of the 10kW Anode Discharge Power Supply, which provides an 80kW PPU, shown in the right lower corner in Figure 1.

Architecture

The HTB PPU development will benefit from two significant architectural changes from the typical Solar Electric Propulsion (SEP) vehicle. At the system level, the solar array will be segmented with one segment sized to power one electric propulsion (EP) string. Another change is the selection of a non-isolated power conversion topology to improve efficiency and specific mass. Both changes are departures from the standard approach that take full advantage of the new SiC technology available commercially.

The segmented solar array architecture is needed to address the cathode current sharing concern in multiple thruster configurations when using a non-isolated power conversion topology. The concern is that the cathodes of Hall thrusters do not share current resulting one cathode carrying all of the active thrusters current not just the one dedicated to the thruster [4]. The segmented array will provide enough isolation to force the current to return through the dedicated cathode on that EP string. All of the segments and EP strings will be referenced to spacecraft chassis through enough impedance to ensure current sharing among the active cathodes.

Non-isolated topologies offer simplest designs with fewer components, but require system level compensation to balance the currents in the cathodes when two or more thrusters are in operation. Without compensation, the total current of all thrusters will most likely flow through one cathode, impacting the life of that component [3]. In order to address the issue of cathode current sharing, different options were proposed, such as isolating PPU, resistor ballast sharing, segmenting array, and active current sharing [1,4]. The impact of these options were analyzed and Segmented Array System Architecture has been chosen.

Shown in Figure 2, Segmented Array provides isolation between cathodes by forcing the cathode current to return to each solar array segment, and increases the fault containment region of each thruster. This architecture can scale with thruster size. It has N+1 redundancy with penalty of doubling the number of HV power switches. The number of HV power switches enables the system to route power to any four out of the five electric propulsion strings. The architecture enables multiple segments to be tied together and channeled to a single thruster for deep space operation at lower power. The HV switch technology is the same SiC MOSFET that is used in the Anode Power Supply eliminating the need for relays. A resettable circuit breaker function is added to each HV switch.

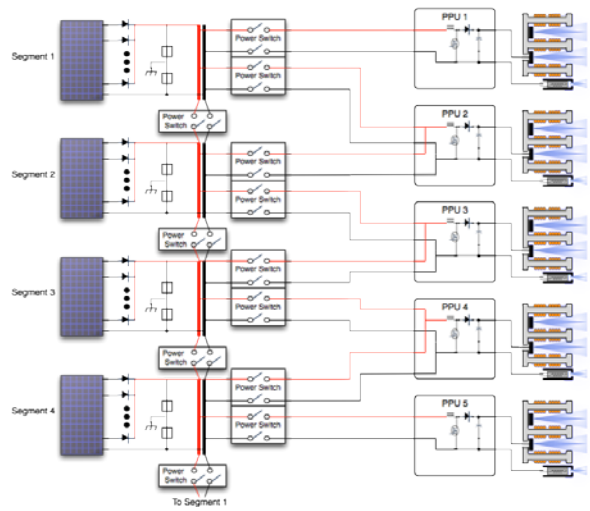

Figure 2. Segmented Array System Architecture to address cathode current sharing

Power Conversion

We aim to minimize development risk by driving toward the simplest, most robust and reliable solution possible. Classic boost topology, a non-isolated topology, designed from the ground up to take advantage of the strengths of SiC MOSFETs, represents a new paradigm.

Conventional isolated topology used for PPU is usually driven by need to stack secondary, easy primary switch stress, greater power handling capability, or requirements for galvanic isolation. However, single point ground, fault tolerance, current sharing, and safety can be achieved without isolation. The combination of improved device performance from the SiC technology and lower thermal resistance packaging allow for a different and more power dense approach.

There are a couple of concerns that, in the boost converter, the main power switch, when left off, does not preclude current from input to output, and that a fault on the output

cannot be cleared by the boost power stage directly as faults on the output will be fed by the input source. However, either a switch can built inside the non-isolated HTB PPU or the non-isolated HTB PPU can fully rely on the HV PMAD protection already designed into the Solar Electrical System. Therefore, the baseline would then use the EPS primary side switch for on off control as well fault protection with no loss in capability. Current limiting in the main power stage can be employed to there is a desire to limit however the nature of the power limited source could very likely obviate this need.

3. 10kW Anode Power Supply

The Anode Power Supply (APS) module was designed and developed as a 10kW 4-phase boost power stage, shown in Figure 3. The four capacitors or filters for the APS are shown on the board in the picture on the left, along with the four SiC MOSFETs and four SiC diodes at the bottom of the board, while the four inductors are shown in the picture on the right.

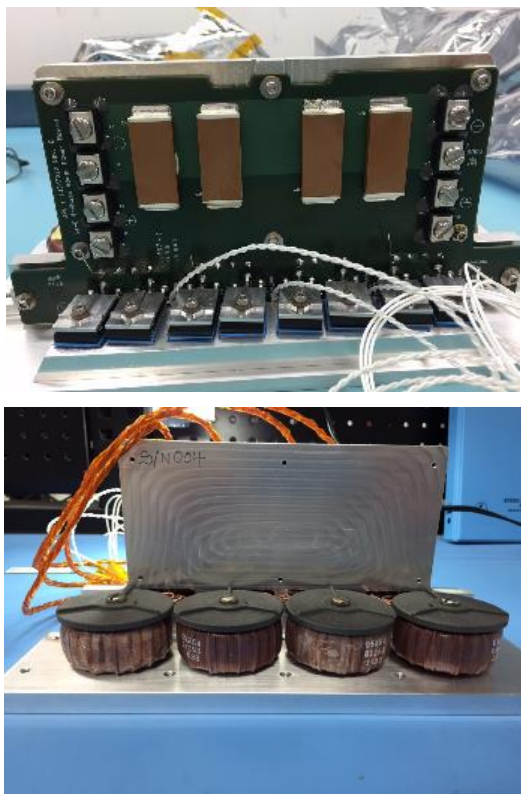

Figure 3. Anode Power Supply

The APS prototype module was tested at ambient temperature of 25°C over the operating points at 300V input voltage and Table 1 shows that the efficiency was greater than 97.5% for operating points.

The APS prototype module was also tested at baseplate of 100°C. Figure 4 shows the efficiency of the four phases at those two temperatures with 100% load was at least 97.7%.

The Project has exceeded the Key Performance Parameter goal of achieving at least 97% efficiency for the APS module.

Table 1. APS Performance over operating points

Throttle Curves at 300V Input Voltage		
Power	Output Voltage	Efficiency
100%	400V	98.9%
100%	500V	98.5%
100%	600V	98.4%
100%	700V	97.9%
100%	800V	97.5%
75%	300V	99.2%
75%	400V	98.9%
75%	500V	98.5%
75%	600V	98.3%
75%	700V	98.0%
75%	800V	98.5%
50%	300V	99.1%
50%	400V	98.8%
50%	500V	98.3%
50%	600V	98.3%
50%	700V	98.1%

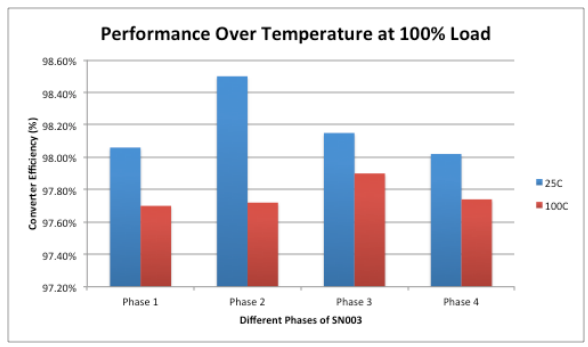

Figure 4. Efficiency of APS over temperature at 100% load.

Mass

The mass of the APS EM-0.3 (version 0.3) module is 2801g. It includes 1190g for enclosure, 185g for the power Printed Wiring Assembly, 90g for the Control Printed Wiring Assembly, 300g for connectors and wires, 940g for inductors, and estimated weight of 300g for EMI covers and 140g for polymerics. The estimated specific mass of the APS is 0.28kg/kw. The Project is on track to achieve 0.5kg/kW for the HTB PPU.

Thermal Analysis

Thermal analysis results for the current APS EM-0.3 module and target final EM module are shown in Figure 8. The boundary conditions for the analysis are based on 266W power dissipation, baseplate temperature of 100C, fifteen bolted interface of #10-32 with TIM applied, and in vacuum (conduction only) condition. The 266W power dissipation is comprised of four SiC MOSFET power dissipation at 50W each, four SiC diode power dissipation at 7W each, four inductor power dissipation at 9W each and power

electronics power dissipation at 2W.

The case temperature of the SiC MOSFETs is at 146°C for EM-0.3 and 126°C for EM-1.0 (version 1.0) with predicated junction temperature at ON operation at 181°C and 161°C, respectively. The case temperature and junction temperature for SiC diodes are about 20°C lower than SiC MOSFETs. The temperature of inductors and the power PWA are about the same for both EM-0.3 and EM-1.0 and approximately at 100°C and 120°C, respectively.

Figure 5 shows the current SiC MOSFET and diode packaging stack-up. The path to EM-1.0 will remove the aluminum block and mount the MOSFETs and diodes directly on the baseplate.

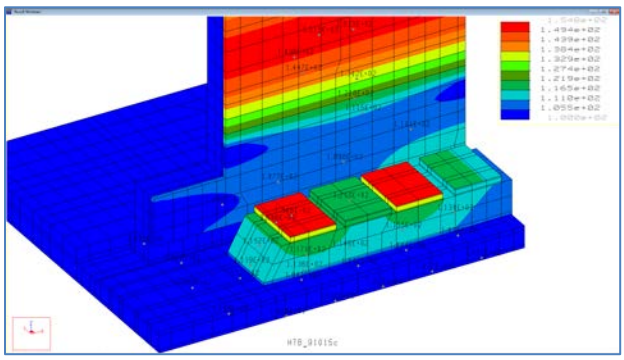

Figure 5. Thermal analysis for APS EM-0.3 module (top) and EM-1.0 module (bottom).

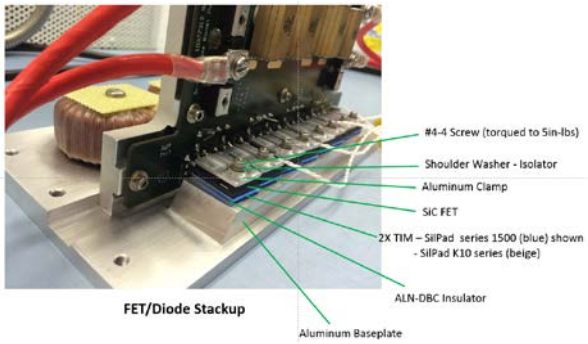

Figure 6. SiC MOSFET and diode packaging stack-up.

4. Extreme Environment Electronics

The main challenge to a flight qualified SiC MOSFET and diode is the vulnerability to Single Event Effects (SEE). The devices are currently de-rated to voltage levels similar to the state of the art silicon components. To truly achieve a game changing performance improvement, the SiC devices need to be SEE hardened similar to flight qualified silicon parts. The hardening approach needs to be a balance the switching loss performance, voltage breakdown, total-dose effects and the SEE performance.

In addition to the radiation challenges, the reliability of the SiC components need to be proven at elevated junction temperatures. The projected junction temperature is 160C with a 100C baseplate. The reliability needs to show a greater 10 year performance in flight and 2 years on the ground.

The design also needs to be qualified for 250 thermal cycles from -55C to 100C on the baseplate.

5. Summary

In summary the HTB PPU development is show casing the capability of the commercial SiC devices if they were flight qualified. The project is identifying weakness of the commercial parts and making recommendations for improvement to achieve this game changing performance in a flight qualified design.

6. Acknowledgement

The High Temperature Boost Power Processing Unite Project is sponsored by the Game Changing Technology Division, NASA Space Technology Mission Directorate. NASA center participation includes LaRC, KSC and GSFC.

Part of this research was carried out at the Jet Propulsion Laboratory, California Institute of Technology, under a contract with the National Aeronautics and Space Administration.

The team and authors would like to extend our acknowledgement to Charles Taylor from NASA Space Technology Mission Directorate, and Tim Smith and Wade May from the Game Changing Technology Division, NASA Space Technology Mission Directorate, for their support and many discussions. The team would also like to thank the center supports from LaRC, KSC, GSFC and JPL.

REFERENCES

[1] NASA Technical Memorandum, "High Temperature Boost (HTB) Power Processing Unit (PPU) Formulation Study", NASA-TM-2013-217792, 2013.

[2] G. A. Carr, C. J. Iannello, Y. Chen, D. J. Hunter, L. Del Castillo A. T. Bradley, C. B. Stell and M. M. Mojarradi, "Extreme Environment Capable, Modular and Scalable Power Processing Unit for Solar Electrical Propulsion", 2013 IEEE Aerospace Conference, Big Sky, MT, March 2-9, 2013.

[3] M. L. R. Walker and A. D. Gallimore, "Hall Thruster Cluster Operation with Shared Cathode", Journal of Propulsion and Power Vol. 23, No. 3, May-June 2007.

[4] J. S. Snyder and J. R. Brophy, "Peak Power Tracking and Multi-Thruster Control in Direct Drive Systems" The 33rd International Electric Propulsion Conference, The George Washington University, USA, October 6-10, 2013.

Biographies

Greg Carr *is a Power System Engineer for Power and Sensor Systems Section 346 at JPL His primary responsibility is the development of new power system architectures. He recently served as the Avionics Power Chief Engineer on the Mars Science Laboratory (MSL), which is a radioisotope powered rover designed for the surface of Mars. Prior to that Greg served as the Power Electronics Design Group Supervisor. Greg is currently a member of the NASA Engineering and Safety Center (NESC) Electrical Power Technical Discipline Team (TDT). Greg has over 20 years of experience in power electronics design and power system engineering. He started his career designing the power control and power distribution interface for Cassini, which is a Radioisotope Thermoelectric Generator (RTG) powered spacecraft exploring the Saturn system. Greg has a BSEE degree from UCLA.*

Chris Iannello *received his BSEE, MSEE, and PhD EE at the University of Central Florida in '94, '99, and '01 respectively all in Power Electronics. He serves as the Deputy Technical Fellow for Power as well as a Deputy Chief Engineer at NASA's Kennedy Space Center where he has worked since 1989. In addition to his NASA career, Dr. Iannello has worked as a senior designer for an advanced power electronics design firm focusing on power electronics R&D with clients including John Deere, Emerson Electronics, Engineering Acoustics, NSF, and the Department of Defense. He has also served as senior researcher in UCF's Florida Power Electronics Center, focusing on R&D activities to advance the state-of-the-art in Power Electronics with specific emphasis on power stage analysis / design as well as control loop design. As a Researcher, he has published over 20 papers in engineering journals, leading discipline conferences, and tutorial seminars.*

Don J. Hunter *has been with the Jet Propulsion Laboratory and a member of the Advanced Electronic Packaging Engineering section since 1993. Major contributions included the development of a ruggedized 6U-VME fight system design for the Mars Pathfinder Mission, Cal Tech and US Patents for work in advanced packaging systems architectures: Integrated 3D Technology on a Spacecraft Panel, development of technology pertaining to miniaturization of science instruments and flight design of a multifunctional antenna design for the Deep Impact Mission. He holds a B.S. in mechanical engineering from California State University Los Angeles and has been involved in electro-mechanical packaging environment for over 25 years. He possesses experience ranging from commercial applications to military (DOD) cold temperature and high-G integrated packaging applications.*

Linda Del Castillo *is a Senior Materials Scientist/ Microdevices Engineer in the Nano and Microsystems Group at JPL. She received her B.S. in Mechanical Engineering from California State Polytechnic University, Pomona, followed by M.S. and Ph.D. degrees in Materials Science and Engineering from the University of California, Irvine. Since beginning her work at JPL in 2000, she has performed research on extreme environment survivable electronic sensors and systems for Venus and highly corrosive, high temperature terrestrial environments, electronic packaging for active membrane radar applications, flexible embedded active devices, as well as advanced materials evaluation for*

high voltage, high heat flux and high frequency hybrid electronics.

Mohammad Mojarradi *is the group supervisor for advanced instruments electronics group at the Jet Propulsion Laboratory. He received the Ph.D. degree in electrical engineering from the University of California, Los Angeles (UCLA) in 1986. Prior to joining Jet Propulsion Laboratory, Pasadena, CA, he was an Associate Professor at Washington State University and the Manager of the mixed-voltage/specialty integrated circuit group at the Xerox Microelectronics Center, El Segundo, CA. He is a Specialist in integrated mixed-signal/mixed-voltage electronic sensors, micromachined interface circuits, and mixed-mode integrated circuit design. He has more than 30 years of combined industrial and academic experience in his field. His current work focuses on developing highly efficient, extreme environment capable, integrated mixed-signal electronics for sensors, actuators, and power management and distribution systems (PMAD) for space borne instruments.*

Yuan Chen *received her Ph.D. degree in reliability engineering from the University of Maryland at College Park, Maryland, in 1998, with a Graduate Fellowship from the National Institute of Standards and Technologies. Currently, she is a senior technical member with the Electronic Systems Branch, NASA Langley Research Center. She was with Jet Propulsion Laboratory during 2002-2009, and with Bell Labs, Lucent Technologies, during 1999-2002. Her research area is on the development of new technologies for space applications and their reliability and qualification methodologies. She is a senior member of IEEE and the editor of IEEE Transactions on Device and Materials Reliability.*

Christopher B. Stell *holds a Bachelor of Science in Engineering degree from California State University Northridge (May 1986). Is a Principal Engineer at the Jet Propulsion Laboratory and employed since 1992. He has over 30 years experience designing power electronics for space applications.*