Radiation Environment Model of Protons and Heavier Ions at Jupiter

Luz Maria Martinez Sierra * and Henry B. Garrett†

Jet Propulsion Laboratory, California Institute of Technology, Pasadena, CA, 91109

Insoo Jun‡

Jet Propulsion Laboratory, California Institute of Technology, Pasadena, CA, 91109

We performed an in depth study of the methods used to review the geometric factors (GF) and sensitivity to charge particles of the Energetic Particle Detector instrument on board the Galileo Spacecraft. Monte Carlo simulations were performed to understand the interactions of electrons and ions (i. e., protons and alphas) with the sensitive regions of the instrument. The DC0 and B0 channels were studied with the intention of using them to update the jovian proton radiation model. The results proved that the B0 is a clean proton chanel without any concerns for contamination by heavier ions and electrons. In contrast, DC0 was found to be contaminated by electrons. Furthermore, we also found out that the B2 channel is a clean alpha particle channel (in other words, no contamination by electrons and/or protons).

I. Introduction

As more data from the instruments on the Galileo spacecraft become available, the Jovian radiation models need to be updated as the evaluation of future mission designs critically depend on them and their accuracy. In this study, Monte Carlo radiation simulations have been performed to analyze the response of selected channels of Galileo Energetic Particle Detector (EPD) to the ambient high energy trapped radiation environment. Each of these channels is sensitive to different particle species over different ranges of energies such that specific logic combinations are activated for each channel (i.e., hit by a specific particle with a specific energy) and can be used to characterize the incident fluxes. In particular, three EPD channels were evaluated in this study to estimate their geometric factors and responses to the electron, proton, and heavy ion environments at Jupiter. These were the B0 (3.2-10 MeV) and DC0 (14.5-35.5 MeV) EPD channels for protons and heavier ions, and the B2 (16-100 MeV) channel for helium. Determining the sensitivity of these channels to H+ and He+ and possible electron contamination is important because it allows us to develop better models of the high energy ion environment at Jupiter.

To be able to model the radiation environment at Jupiter, the in-situ count rates measured by the EPD need to be converted to fluxes (e.g., count rates in counts/second to flux in units of particles/sec-cm^2-ster-keV). The geometric factor calculated for each detector permits to transform the measured count rates into a particle flux. To estimate the geometric factors, a 3D radiation transport code developed by Los Alamos National Lab, MCNPX,[1] was used to simulate the nuclear interactions of the Jovian particle environment with the EPD materials. The geometry and materials distribution of the EPD sensor structures were accurately modeled in MCNPX as shown in the left side of Figure 1 (left). The 4 detectors are shown in light blue and named accordingly. The source particles were modeled as if they are leaving a spherical surface radially inwards with a cosine angular distribution. The right side of Figure 1 shows some particles leaving

*Natural Space Environments Engineer, Reliability Engineering and Mission Environmental Assurance Office, Jet Propulsion Laboratory (MS 122-104) 4800 Oak Grove Dr. Pasadena, CA, 91109, AIAA professional member.

†Principal Scientist, Reliability Engineering and Mission Environmental Assurance Office, Jet Propulsion Laboratory (MS 122-104) 4800 Oak Grove Dr. Pasadena, CA, 91109, AIAA Associate Fellow.

‡Principal Scientist, Reliability Engineering and Mission Environmental Assurance Office, Jet Propulsion Laboratory (MS 122-104), 4800 Oak Grove Dr. Pasadena, CA, 91109.

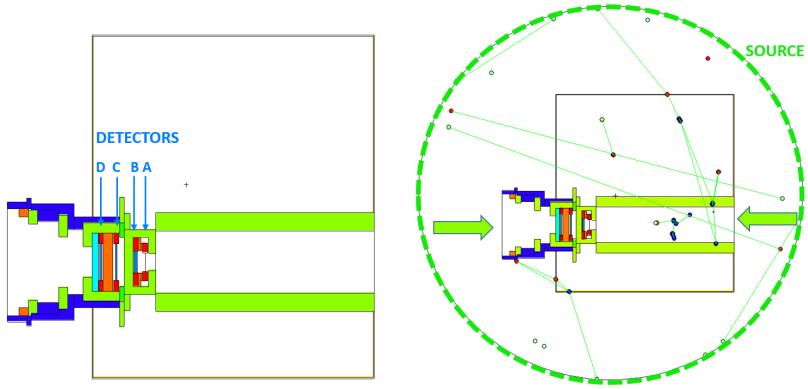

Figure 1. Locations of the source and detectors within the EPD 3D model, using VisualMCNP

the sources surface (green dotted line) and traveling inwards to be captured by the detector. The openings of the detector (where the particles can enter) are presented with the green arrows on both sides of the model.

This structural model allowed us to test the device under different flux environments and evaluate its response. The source particles were modeled as monoenergetic sources distributed over a spherical surface as presented in Figure 1 (right) by the green dotted line. The source was modeled for either protons or alphas over a wide range of energy values (chosen specifically for each detector). The simulations were run for 50 million source particles to ensure that the uncertainties of the results stayed less than 10%

II. Methodology

Using MCNPx version 2.7.0, the calculations were made by following each incident particle into either one of the four detectors. Figure 1 (right) shows the track of a few particles when they leave the source surface until they stop in the detectors (or other components) or exit the cells of interest. The Monte Carlo code is able to follow each particle until it has an energy lower than the code's cutoff energy (1 MeV for protons and 4 Mev for alpha particles). Using the PTRAC card in the MCNP input we obtained the history of all the particles that had interactions inside the detectors A, B, C, and/or D avoiding the need to follow all the interactions that occurred in the walls and other components of the instrument. Depending on the energy deposited at each detector it is possible to determine when a particle interacting in the detectors will activate a different logic channel. The electronic threshold energies (energy deposition needed to determine when the channel was activated) for the channels are summarized in Table 1.

Table 1. Detector energy threshold (A, B, C, D)

Detector Number	Energy Threshold MeV	Detector Number	Energy Threshold MeV
A1	0.018	B1	0.075
A2	0.034	B2	0.800
A3	0.055	B3	8.270
A4	0.110		
A5	0.272	C1	0.162
A6	0.510	C2	2.170
A7	0.820	D1	0.133
A8	1.65	D2	1.860

For the purpose of this study, verification of the B0, DC0 and B2 channels were made under the activation logic presented in Table 2. Based on there logics, we can determine when a certain channel is activated. For example, a particle should deposit more than (or equal to) 1.65 MeV in the detector A, more than (or equal to) 8.270 MeV in detector B, and less than 2.170 MeV in detector C to be counted as a B2 channel.

After implementing an IDL code to read and sort out the PTRAC file information for each collision produced by our simulations, we were able to determine the energy deposited by each particle in the cells of interest (detectors). In Figure 2 different tracks and the track density can be seen for 20 MeV source

Table 2. Logic required to activate a channel and record it as a count

Channel	Channel Logic
B0	A7 B1 (C2)
B2	A8 B3 (C2)
DC0	(B1) D2 (C1)

protons. The plots were made using IViPP (Interactive Visualizations in Particle Physics)[a].

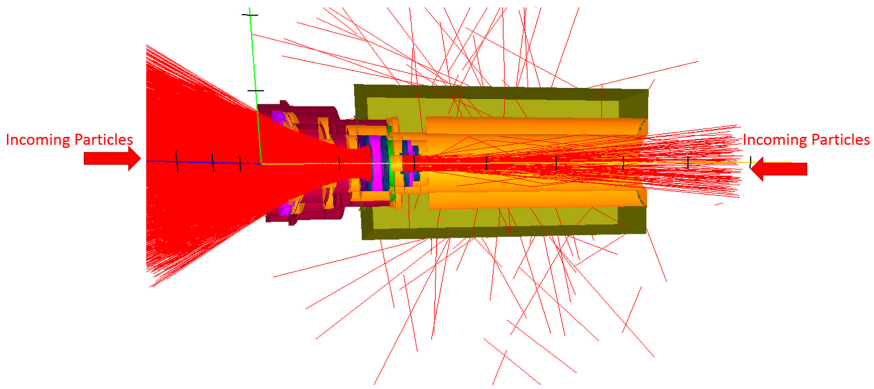

Figure 2. Cross sectional diagram of 20 MeV protons that interact with the detectors represented in dark blue.The red lines represent the trajectory of the source particles that interact with the detectors. The 'cones' observed are the field of view at each end of the instrument

III. Results

While electrons are the major contributors to the internal total ionizing dose calculations at Jupiter, the protons and heavy ions affect external surfaces (i.e., solar array coverglass) and thus also play an important role in radiation design. For this purpose the estimation of the geometric factors and the response of the instrument to the environment is required. The resulting update of the values for geometric factors are presented in Tables 3 and 4. These tables contain the values previously presented by Jun *et al*[2] for reference. Figure 4 and Figure 5 show the geometric factors for both chaneels as calculated in this study (blue curves) and the referenced values presented by Jun *et al* in 2002.

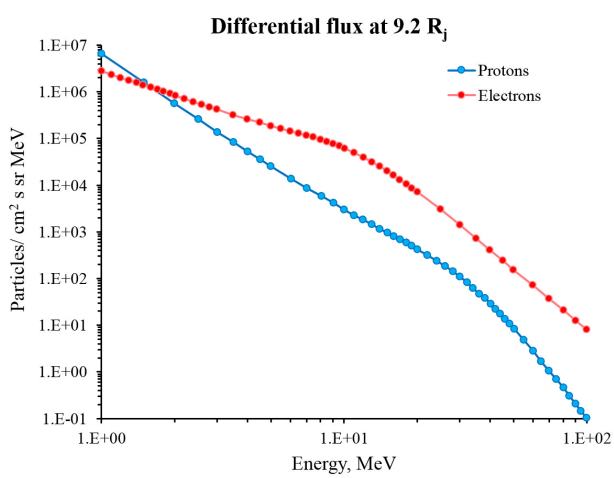

Figure 3. Electron and Proton differential flux at 9.2 Rj based on D-G radiation model

[a]developed by Douglas Baldwin, Computer Science Department, SUNY

The next step is to determine the protons' relative contribution to the total count rate at different energies. Using the proton differential flux at 9.2 Rj based on the D-G radiation model,[3] the count rates for each energy bin were computed. For this purpose, the proton bin fluxes were obtained from the plot in Figure 3 and multiplied by the respective values of the geometric factors for each channels. The resulting contributions of the protons for each channel are plotted as the green and yellow lines in Figures 4 and 5.

Table 3. Comparison between this study and the Jun *et. al.* proton geometric factors for the DC0 channel.

Proton Energy	This study				Jun et al.			
(MeV)	**DC0 counts**	**cm2**	**cm2-sr**	**error**	**DC0 counts**	**cm2**	**cm2-sr**	**error**
3	0	0	0		5	3.14E-05	3.95E-04	45%
3.5	10	6.28E-05	7.90E-04	32%	10	6.28E-05	7.90E-04	32%
4	15	9.42E-05	1.18E-03	26%	11	6.91E-05	8.69E-04	30%
4.5	15	9.42E-05	1.18E-03	26%	10	6.28E-05	7.90E-04	32%
5	21	1.32E-04	1.66E-03	22%	16	1.01E-04	1.26E-03	25%
5.5	29	1.82E-04	2.29E-03	19%	30	1.88E-04	2.37E-03	18%
6	22	1.38E-04	1.74E-03	21%	24	1.51E-04	1.89E-03	20%
6.5	46	2.89E-04	3.63E-03	15%	20	1.26E-04	1.58E-03	22%
7	46	2.89E-04	3.63E-03	15%	22	1.38E-04	1.74E-03	21%
7.5	25	1.57E-04	1.97E-03	20%	31	1.95E-04	2.45E-03	18%
8	40	2.51E-04	3.16E-03	16%	35	2.20E-04	2.76E-03	17%
8.5	34	2.14E-04	2.68E-03	17%	35	2.20E-04	2.76E-03	17%
9	46	2.89E-04	3.63E-03	15%	41	2.58E-04	3.24E-03	16%
9.5	46	2.89E-04	3.63E-03	15%	30	1.88E-04	2.37E-03	18%
10	43	2.70E-04	3.40E-03	15%	34	2.14E-04	2.68E-03	17%
11	47	2.95E-04	3.71E-03	15%	43	2.70E-04	3.40E-03	15%
12	47	2.95E-04	3.71E-03	15%	38	2.39E-04	3.00E-03	16%
13	47	2.95E-04	3.71E-03	15%	55	3.46E-04	4.34E-03	13%
14	50	3.14E-04	3.95E-03	14%	52	3.27E-04	4.11E-03	14%
15	75	4.71E-04	5.92E-03	12%	54	3.39E-04	4.26E-03	14%
16	63	3.96E-04	4.97E-03	13%	49	3.08E-04	3.87E-03	14%
17	84	5.28E-04	6.63E-03	11%	55	3.46E-04	4.34E-03	13%
18	56	3.52E-04	4.42E-03	13%	63	3.96E-04	4.97E-03	13%
19	66	4.15E-04	5.21E-03	12%	49	3.08E-04	3.87E-03	14%
20	74	4.65E-04	5.84E-03	12%	61	3.83E-04	4.82E-03	13%
30	78	4.90E-04	6.16E-03	11%	53	3.33E-04	4.18E-03	14%
40	91	5.72E-04	7.19E-03	10%	58	3.64E-04	4.58E-03	13%
50	106	6.66E-04	8.37E-03	10%	63	3.96E-04	4.97E-03	13%
60	101	6.35E-04	7.97E-03	10%	47	2.95E-04	3.71E-03	15%
70	106	6.66E-04	8.37E-03	10%	56	3.52E-04	4.42E-03	13%

Table 4. Comparison of the proton geometric factors for the B0 channel

Proton Energy	This study				Jun et al. (2002)			
(MeV)	**B0 counts**	**cm2**	**cm2-sr**	**error**	**B0 counts**	**cm2**	**cm2-sr**	**error**
3.5	162	7.36E-04	9.25E-03	7.90%	146	6.63E-04	8.33E-03	8.28%
4	170	7.72E-04	9.70E-03	7.70%	164	7.45E-04	9.36E-03	7.81%
4.5	174	7.90E-04	9.93E-03	7.60%	166	7.54E-04	9.48E-03	7.76%
5	179	8.13E-04	1.02E-02	7.50%	166	7.54E-04	9.48E-03	7.76%
6	187	8.49E-04	1.07E-02	7.30%	166	7.54E-04	9.48E-03	7.76%
7	190	8.63E-04	1.08E-02	7.30%	166	7.54E-04	9.48E-03	7.76%
8	195	0.00E+00	0.00E+00	7.2%	166	7.54E-04	9.48E-03	7.76%
9	185	8.40E-04	1.06E-02	7.40%	166	7.54E-04	9.48E-03	7.76%
10	127	5.77E-04	7.25E-03	8.90%	102	4.63E-04	5.82E-03	9.90%
15	18	8.18E-05	1.03E-03	23.60%	0	0.00E+00	0.00E+00	
20	10	4.54E-05	5.71E-04	31.60%	0	0.00E+00	0.00E+00	
30	6	2.73E-05	3.42E-04	40.80%	0	0.00E+00	0.00E+00	
40	5	2.27E-05	2.85E-04	44.70%	0	0.00E+00	0.00E+00	
50	2	9.08E-06	1.14E-04	70.70%	0	0.00E+00	0.00E+00	
60	2	9.08E-06	1.14E-04	70.70%	0	0.00E+00	0.00E+00	
70	3	1.36E-05	1.71E-04	57.70%	0	0.00E+00	0.00E+00	
80	6	2.73E-05	3.42E-04	40.80%	0	0.00E+00	0.00E+00	
90	20	9.08E-05	1.14E-03	22.40%	0	0.00E+00	0.00E+00	
100	56	2.54E-04	3.20E-03	13.40%	0	0.00E+00	0.00E+00	

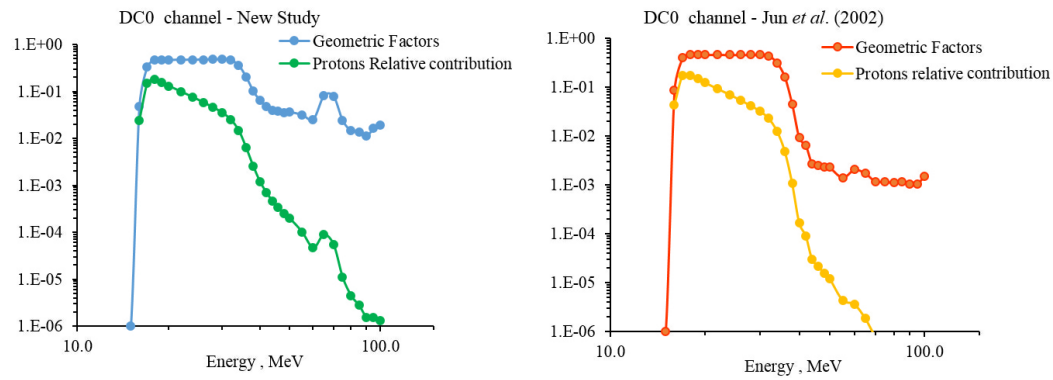

Figure 4. DCO proton geometric factors for this study and previous studies (Jun *et al.* (2002)) compared with the relative contribution of protons

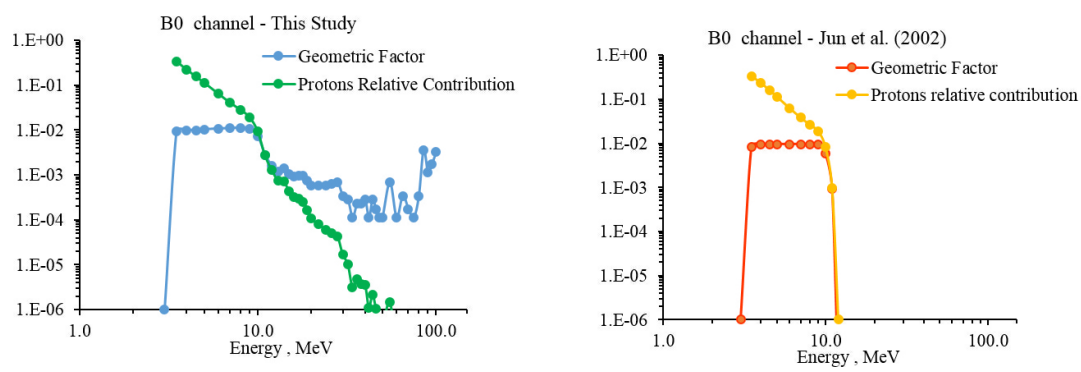

Figure 5. B0 proton geometric factors for this study and previous studies (Jun *et al.* (2002)) compared with the relative contribution of protons

The channels DC0 and B0 are supposed to be sensitive only to protons. Figure 4 and Figure 5 show that the response to protons of these two channels are quite good, indeed it is a few orders of magnitude higher than the response to electrons. There are some differences between the geometric factors previously presented by Jun *et. al* and the ones calculated in this study. The divergence can be seen towards the higher energy range. Here the relative impact of protons is very low as can be infer from the protons' relative contribution. Therefore, we can conclude that the differences between GFs computed in this study and GFs from Jun *et al.* is not that important.

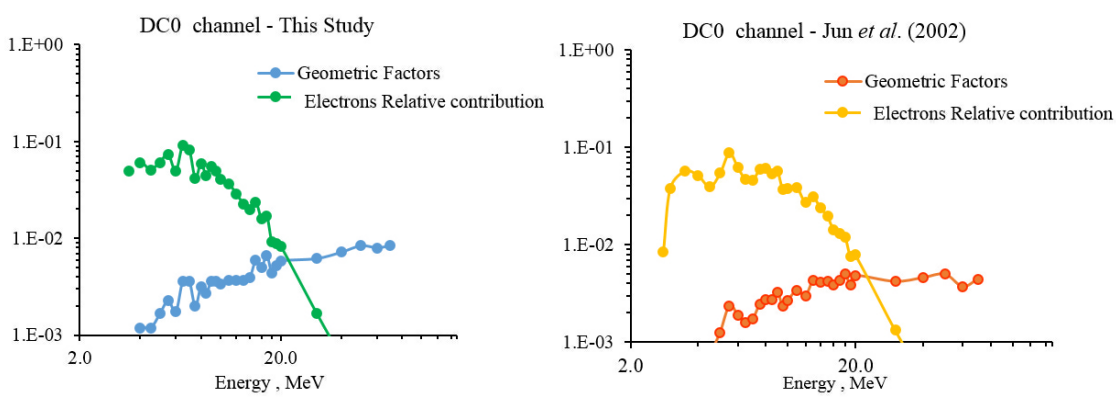

Figure 6. Electron geometric factors for the DC0 channel and their respective contributions from two different studies

The same two channels were next evaluated for the effects of the electron fluxes to verify that the contamination (contributions due to electrons) was negligible. The response of the electrons to the DC0 channel is plotted in Figure 6, where the geometric factor and the relative contributions from different electron energy bins are shown. Table 5 presents the data for the geometric factors calculated for the electrons' response to the DC0 channel. The interactions and tracks of the electrons can be seen in Figure 7, where the scattering of the particles is more noticeable than proton-incident cases. In contrast, the B0 channel was not found to be sensitive to the electrons, and the data are not presented due to the lack of relevant information. The response was nonexistent for the electrons when the channel logic was implemented. This can be verified physically with some LET calculations for the interactions for electrons with each of the detectors involved in the logic.

Table 5. Comparison of the electrons geometric factors for the DC0 channel

Electron Energy	This study				Jun *et al.*			
(MeV)	**DC0 counts**	**cm^2**	**cm^2-sr**	**error**	**DC0 counts**	**cm^2**	**cm^2-sr**	**error**
3.0	0	0.00E+00	0.00E+00		5	3.14E-05	3.95E-04	44.7%
3.5	10	6.28E-05	7.90E-04	31.6%	10	6.28E-05	7.90E-04	31.6%
4.0	15	9.42E-05	1.18E-03	25.8%	11	6.91E-05	8.69E-04	30.2%
4.5	15	9.42E-05	1.18E-03	25.8%	10	6.28E-05	7.90E-04	31.6%
5.0	21	1.32E-04	1.66E-03	21.8%	16	1.01E-04	1.26E-03	25.0%
5.5	29	1.82E-04	2.29E-03	18.6%	30	1.88E-04	2.37E-03	18.3%
6.0	22	1.38E-04	1.74E-03	21.3%	24	1.51E-04	1.89E-03	20.4%
6.5	46	2.89E-04	3.63E-03	14.7%	20	1.26E-04	1.58E-03	22.4%
7.0	46	2.89E-04	3.63E-03	14.7%	22	1.38E-04	1.74E-03	21.3%
7.5	25	1.57E-04	1.97E-03	20.0%	31	1.95E-04	2.45E-03	18.0%
8.0	40	2.51E-04	3.16E-03	15.8%	35	2.20E-04	2.76E-03	16.9%
8.5	34	2.14E-04	2.68E-03	17.1%	35	2.20E-04	2.76E-03	16.9%
9.0	46	2.89E-04	3.63E-03	14.7%	41	2.58E-04	3.24E-03	15.6%
9.5	46	2.89E-04	3.63E-03	14.7%	30	1.88E-04	2.37E-03	18.3%
10.0	43	2.70E-04	3.40E-03	15.2%	34	2.14E-04	2.68E-03	17.1%
11.0	47	2.95E-04	3.71E-03	14.6%	43	2.70E-04	3.40E-03	15.2%
12.0	47	2.95E-04	3.71E-03	14.6%	38	2.39E-04	3.00E-03	16.2%
13.0	47	2.95E-04	3.71E-03	14.6%	55	3.46E-04	4.34E-03	13.5%
14.0	50	3.14E-04	3.95E-03	14.1%	52	3.27E-04	4.11E-03	13.9%
15.0	75	4.71E-04	5.92E-03	11.5%	54	3.39E-04	4.26E-03	13.6%
16.0	63	3.96E-04	4.97E-03	12.6%	49	3.08E-04	3.87E-03	14.3%
17.0	84	5.28E-04	6.63E-03	10.9%	55	3.46E-04	4.34E-03	13.5%
18.0	56	3.52E-04	4.42E-03	13.4%	63	3.96E-04	4.97E-03	12.6%
19.0	66	4.15E-04	5.21E-03	12.3%	49	3.08E-04	3.87E-03	14.3%
20.0	74	4.65E-04	5.84E-03	11.6%	61	3.83E-04	4.82E-03	12.8%
30.0	78	4.90E-04	6.16E-03	11.3%	53	3.33E-04	4.18E-03	13.7%
40.0	91	5.72E-04	7.19E-03	10.5%	58	3.64E-04	4.58E-03	13.1%
50.0	106	6.66E-04	8.37E-03	9.7%	63	3.96E-04	4.97E-03	12.6%
60.0	101	6.35E-04	7.97E-03	10.0%	47	2.95E-04	3.71E-03	14.6%
70.0	106	6.66E-04	8.37E-03	9.7%	56	3.52E-04	4.42E-03	13.4%

For the B0 channel to be activated, the logic required was A7 B1 (C2). This means that the electrons are required to deposit at least 0.820 MeV in detector A and at least 0.075 MeV in detector B and deposit less than 2.170 MeV in detector C. The electrons that come into the detector from the side of the A detector will be most likely stopped by the thick platinum shield (12g/cm^2) before reaching detector C.

The data presented here were intended to provide more accurate determination of the geometric factor for the EPD, compared to those reported by Jun *et al.* in 2002. First, different versions of MCNPX were used by Jun et al. (2002)[2] and in this study. Second, the calculations of the new geometric factors have lower percent error associated with them. This is due in part to the cross-section values inside the Monte Carlo transport code. The nuclear interactions cross-section values are updated with every new released version of the transport code.

To better understand the real data obtained by the instrument, we need a way to determine the contributions of each particle type in the measurements. Table 6 presents the percentage contribution of protons and electrons counts to the DC0 channel response. The true counts were calculated by multiplying the Geometric factor at each energy by the flux. Then, the total contribution of either the electrons or protons could

be determined by adding the individual counts together for each component. The statistical relationship between the number of protons and electrons detected by the instrument in a given time clearly will help to improve the environmental model. The updated model will provide more accurate environment spectra for radiation protection of future missions and radiation hardness assurance for electronic equipment.

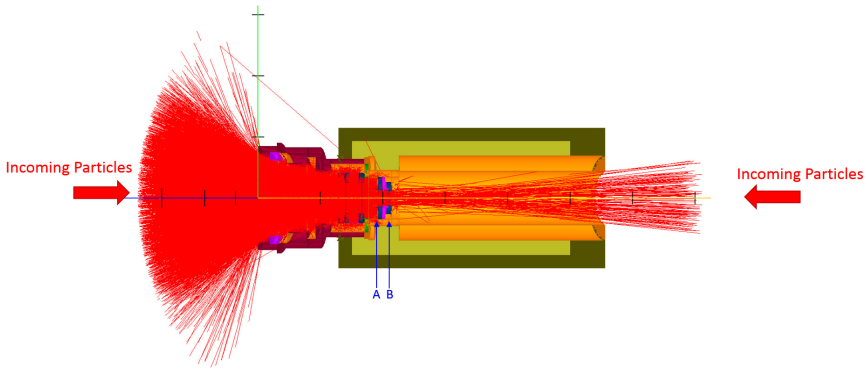

Figure 7. Spherical source of 11 MeV electrons. The red tracks are the particles detected by the EPD instrument in the MonteCarlo simulations. IViPP was used for visualization

The B2 channel was also investigated to study its response to alpha particles and possible contamination from protons. The alpha response was evaluated in a similar manner. The 3D model previously presented was used under a spherical source of alpha particles. Then, the geometric factors were calculated by counting the alpha particles interacting with the detector under the B2 logic. The counts and their respective geometric factors are presented in Table 7. This channel was also evaluated for the proton response. But the results indicated that this channel is insensitive to any protons, which implies that the alpha measurements made by this channel are clean and reliable.

Table 6. Percent contribution of electrons and protons to the DC0 channel counts

Energy	Proton			Electrons			Total		
(MeV)	GF	Flux	Counts	GF	Flux	Counts	Counts	Proton %	Electron %
3.50	0.00E+00	1.37E+05	0.00E+00	7.90E-04	3.18E+05	2.51E+02	251.39	0.00	100.00
4.00	0.00E+00	5.22E+04	0.00E+00	1.18E-03	2.60E+05	3.08E+02	308.12	0.00	100.00
4.50	0.00E+00	5.22E+04	0.00E+00	1.18E-03	2.20E+05	2.60E+02	260.40	0.00	100.00
5.00	0.00E+00	3.56E+04	0.00E+00	1.66E-03	1.88E+05	3.12E+02	311.56	0.00	100.00
5.50	0.00E+00	2.54E+04	0.00E+00	2.29E-03	1.62E+05	3.72E+02	371.86	0.00	100.00
6.00	0.00E+00	2.54E+04	0.00E+00	1.74E-03	1.45E+05	2.52E+02	252.17	0.00	100.00
6.50	0.00E+00	1.39E+04	0.00E+00	3.63E-03	1.30E+05	4.71E+02	471.30	0.00	100.00
7.00	0.00E+00	1.39E+04	0.00E+00	3.63E-03	1.16E+05	4.21E+02	421.28	0.00	100.00
7.50	0.00E+00	8.55E+03	0.00E+00	1.97E-03	1.07E+05	2.12E+02	211.67	0.00	100.00
8.00	0.00E+00	8.55E+03	0.00E+00	3.16E-03	9.59E+04	3.03E+02	302.72	0.00	100.00
8.50	0.00E+00	5.77E+03	0.00E+00	2.68E-03	8.47E+04	2.27E+02	227.42	0.00	100.00
9.00	0.00E+00	5.77E+03	0.00E+00	3.63E-03	8.47E+04	3.08E+02	307.69	0.00	100.00
9.50	0.00E+00	4.17E+03	0.00E+00	3.63E-03	7.74E+04	2.81E+02	281.28	0.00	100.00
10.00	0.00E+00	2.98E+03	0.00E+00	3.40E-03	6.92E+04	2.35E+02	235.02	0.00	100.00
11.00	0.00E+00	2.98E+03	0.00E+00	3.71E-03	6.12E+04	2.27E+02	227.04	0.00	100.00
12.00	0.00E+00	1.82E+03	0.00E+00	3.71E-03	5.00E+04	1.85E+02	185.50	0.00	100.00
13.00	0.00E+00	1.43E+03	0.00E+00	3.71E-03	3.95E+04	1.47E+02	146.53	0.00	100.00
14.00	1.00E-07	1.43E+03	1.43E-04	3.95E-03	3.12E+04	1.23E+02	123.14	0.00	100.00
15.00	1.00E-06	1.15E+03	1.15E-03	5.92E-03	2.55E+04	1.51E+02	150.91	0.00	100.00
16.00	4.71E-02	9.68E+02	4.56E+01	4.97E-03	1.63E+04	8.09E+01	126.46	36.04	63.96
17.00	3.34E-01	7.91E+02	2.64E+02	6.63E-03	1.31E+04	8.71E+01	351.07	75.18	24.82
18.00	4.66E-01	6.84E+02	3.19E+02	4.42E-03	1.31E+04	5.81E+01	376.87	84.59	15.41
19.00	4.68E-01	5.84E+02	2.73E+02	5.21E-03	1.06E+04	5.53E+01	328.51	83.16	16.84
20.00	4.68E-01	5.05E+02	2.36E+02	5.84E-03	8.67E+03	5.07E+01	287.15	82.36	17.64
30.00	4.82E-01	1.44E+02	6.92E+01	6.16E-03	1.41E+03	8.66E+00	77.83	88.88	11.12
40.00	6.38E-02	3.77E+01	2.41E+00	7.19E-03	4.13E+02	2.97E+00	5.38	44.77	55.23
50.00	3.64E-02	1.07E+01	3.90E-01	8.37E-03	1.56E+02	1.30E+00	1.69	23.06	76.94
60.00	2.54E-02	4.88E+00	1.24E-01	7.97E-03	7.33E+01	5.84E-01	0.71	17.52	82.48
70.00	7.82E-02	1.06E+00	8.29E-02	8.37E-03	3.73E+01	3.13E-01	0.40	20.96	79.04

Figure 8 is a graphical representation of the B2 alpha particle GF and shows a well defined response of the B2 channel. It can be seen that alphas with energy lower than 20 MeV will not be detected.

Table 7. B2 alpha response of geometric factors.

Alpha	LMM			
MeV	**B2 counts**	**cm2**	**cm2-sr**	**error**
5	0			
10	0	0.00E+00	1.00E-07	
15	0	0.00E+00	1.00E-07	
20	166	1.04E-03	1.31E-02	
25.0	166	1.04E-03	1.31E-02	7.8%
30.0	166	1.04E-03	1.31E-02	7.8%
35.0	167	1.05E-03	1.32E-02	7.7%
40.0	169	1.06E-03	1.33E-02	7.7%
45.0	170	1.07E-03	1.34E-02	7.7%
50.0	172	1.08E-03	1.36E-02	7.6%
55.0	171	1.07E-03	1.35E-02	7.6%
60.0	174	1.09E-03	1.37E-02	7.6%
65.0	173	1.09E-03	1.37E-02	7.6%
70.0	171	1.07E-03	1.35E-02	7.6%
75.0	172	1.08E-03	1.36E-02	7.6%
80.0	170	1.07E-03	1.34E-02	7.7%
85.0	157	9.86E-04	1.24E-02	8.0%
90.0	99	6.22E-04	7.82E-03	10.1%
95.0	101	6.35E-04	7.97E-03	10.0%
100.0	43	2.70E-04	3.40E-03	15.2%
105.0	41	2.58E-04	3.24E-03	15.6%

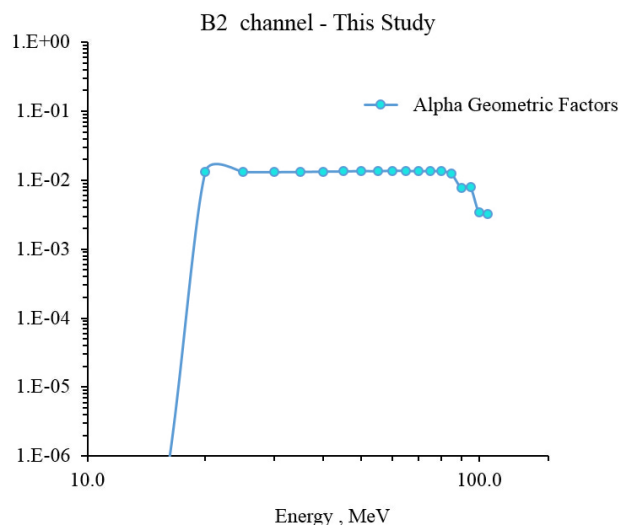

Figure 8. Alpha geometric factors for the B2 channel logic

IV. Conclusion

Several channels of the EPD instrument were studied to determine the sensitivity and contamination level of electrons, protons, and alpha particles. In the DC0 channel for particles with energies higher than 16 MeV, the electron contributions to the counts on the detector were higher compared to the proton contributions in certain energy ranges. An average of roughly 80% − 90% of the DC0 count rates measured is estimated to be from electron contamination. The B0 channel presented a very clean response for protons without any contamination due to electrons. The alpha channel, B2, also presented a flat clean response over the energy range expected.

The verification of the geometric factors and the determination of contamination levels in the instrument

allow us to have better interpretation of the data obtained by Galileo when it orbited Jupiter. The validity of our interpretation of these data will ultimately allow us to develop an update of radiation model for the trapped particles around Jupiter.

References

[1]Pelowitz, D. B., *MCNPX TM USERS MANUAL Version 2.7.0*, Los Alamos National Security, LLC, la-cp-11-00438 ed., apr 2011.

[2]Jun, I., Ratliff, J., Garrett, H., and McEntire, R., "Monte Carlo simulations of the Galileo energetic particle detector," *Nuclear Instruments and Methods in Physics Research Section A: Accelerators, Spectrometers, Detectors and Associated Equipment*, Vol. 490, No. 3, 2002, pp. 465 – 475.

[3]Divine, N. and Garrett, H. B., "Charged particle distributions in Jupiter's magnetosphere," *Journal of Geophysical Research: Space Physics*, Vol. 88, No. A9, 1983, pp. 6889–6903.