Jet Propulsion Laboratory
California Institute of Technology

Low Density Supersonic Decelerators

Pyrotechnically Actuated Gas Generator Utilizing Aqueous Methanol

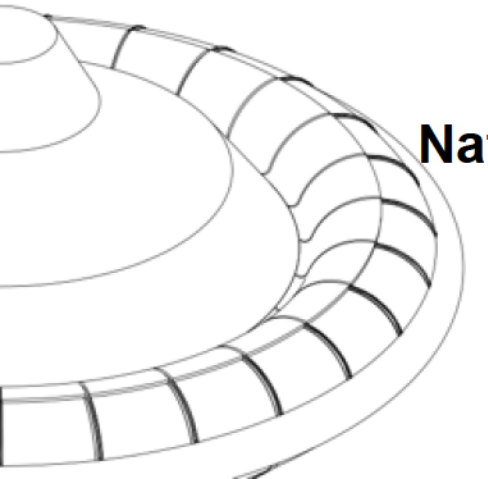

Nathaniel Thompson, Ashley C. Karp, John Gallon, Christopher Tanner

Jet Propulsion Laboratory, Pasadena, CA

LDSD Ballute Overview

- Ram-air inflated isotensoid ballute is used to extract the parachute from the SFDT vehicle.

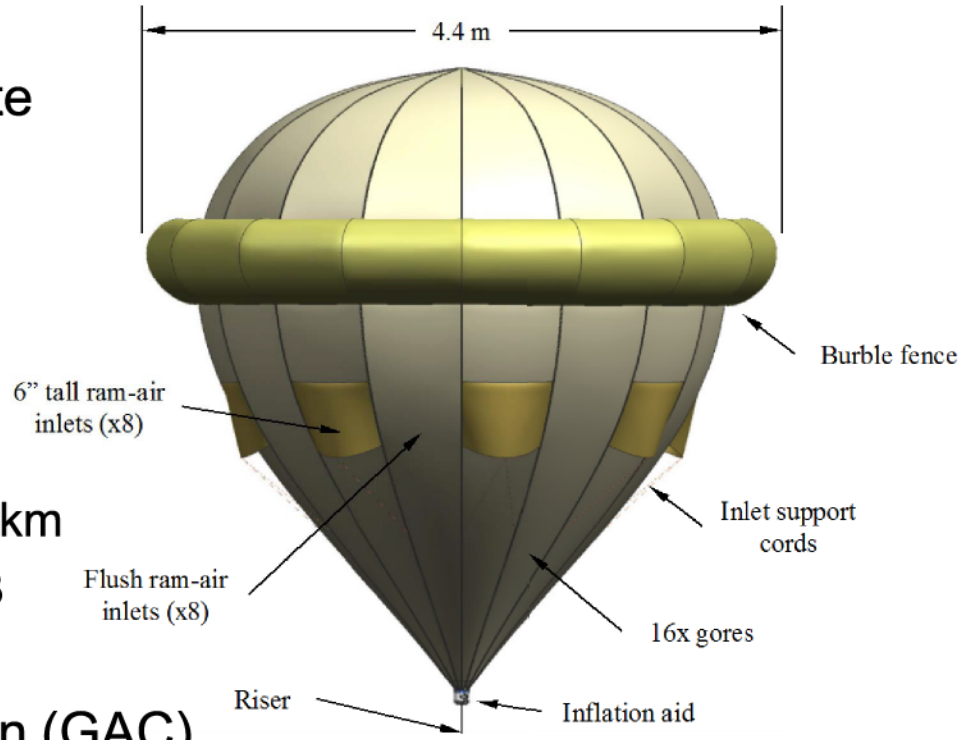

- Ballute Key Stats
  - 4.4 m diameter, 28.1 m^3 volume
  - Nominal deployment altitude 50 km
  - Deployment speed up to Mach 3
- Goodyear Aerospace Corporation (GAC) developed similar ballutes in the 1960's.
  - Ballutes pre-inflated via a device that dispersed methanol, which rapidly evaporated inside the ballute at ambient conditions.
  - A 5.5 m ballute deployed at Mach 3.15 failed to inflate fast enough and was destroyed.
    - Only documented deployment of ballute without pre-inflation device
    - Results drove requirement for pre-inflation device on SFDT.

Design Requirements

- Only two formal requirements levied on Inflation Aid (IA):
  - The IA shall supply at least 50% of the expected ballute internal pressure in approximately 0.4 seconds with a 95% likelihood.
  - The IA must not degrade the aerodynamic performance of the ballute and must not preclude the use of the ram-air inlets for inflation should the IA malfunction in flight.

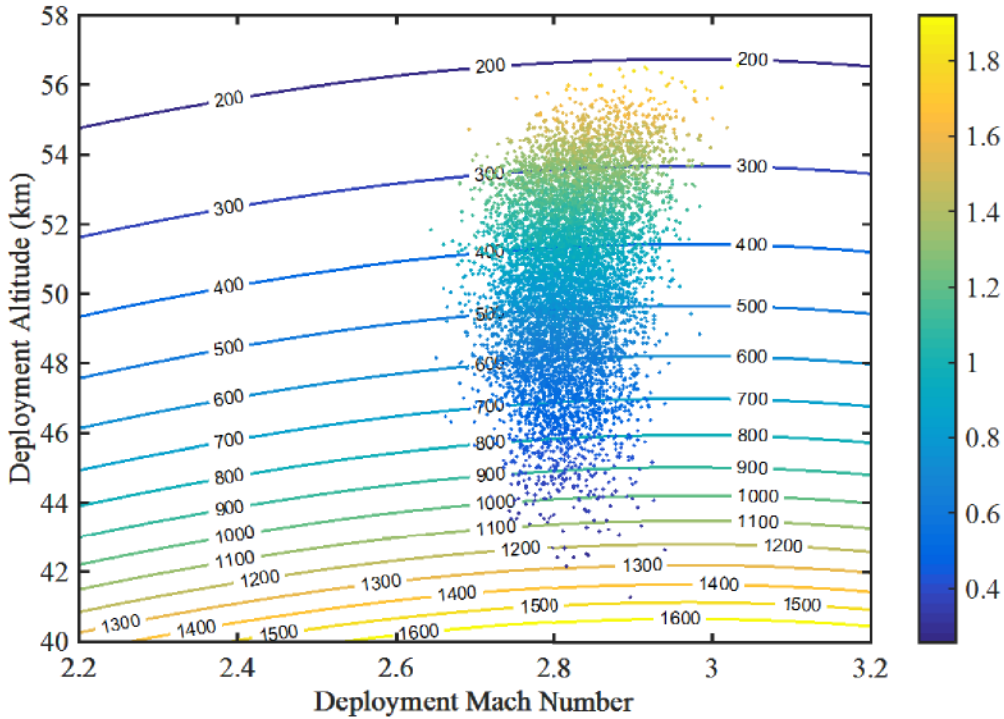

Gas Generation

- Several methods for gas generation were explored:
  - Pyrotechnic propellant
  - Compressed Helium
  - Liquid methanol/water solution
- Methanol solution was ultimately selected due based on lowest risk to ballute hardware, device mass, and personnel safety.
- IA takes advantage of phase change parameters for methanol. Liquid at standard temperature and pressure, vaporizes under reduced pressure experienced at ballute deployment.

$$Q_{v,CH_3OH} = m_{CH_3OH} \Delta H_{CH_3OH}$$

- Energy for vaporization is derived from several sources: sensible heat from depressurization, heat of fusion of water, heat from ballute and IA itself.

$$Q_{avail} = Q_{s,CH_3OH} + Q_{f,H_2O} + Q_b + Q_{IA}$$

Predicted Performance

Deployment at 3°C

Energy	Amount (kJ)
Req'd for methanol vaporization	-317.1
Depressurization	+38.9
Fusion of liquid water	+29.4
Ballute contact	+87.4
Inflation aid contact	+12.0
Deficit for full vaporization	-149.3

Vaporized Mass, m_{avail,CH_3OH}	0.148 kg
Pressure Generated, p_{avail,CH_3OH}	295.1 Pa

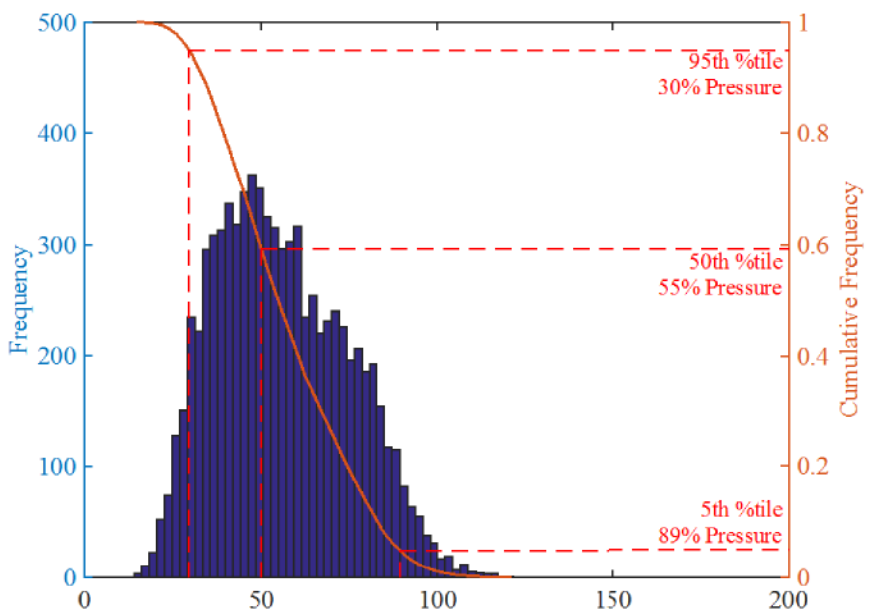

Deployment at 40°C

Energy	Amount (kJ)
Req'd for methanol vaporization	-303.0
Depressurization	+68.4
Fusion of liquid water	+29.4
Ballute contact	+140.7
Inflation aid contact	+19.3
Deficit for full vaporization	-45.2

Vaporized Mass, m_{avail,CH_3OH}	0.246 kg
Pressure Generated, p_{avail,CH_3OH}	489.1 Pa

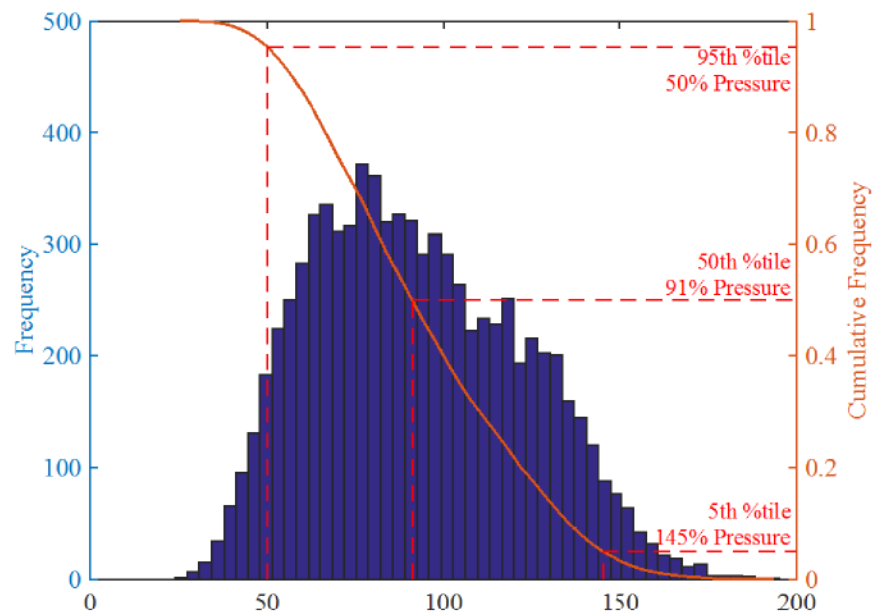

Inflation Aid Architecture

- Possible methanol vessel architectures:
  - Compliant vessel, pulled apart during ballute bag strip (used by GAC)
  - Rigid vessel, pressurized until rupture at desired time.
- Rigid vessel was selected based on large ballute packing pressures, and high acceleration experienced at mortar-fire and line stretch.
- Black powder was selected as a gas-generating propellant to pressurize the reservoir.
- Initiation methods considered:
  - Vehicle-commanded electrical initiation
  - Timer-based electronic initiation
  - Timer-based pyrotechnic fuse
  - Mechanical initiation by ballute itself
- Selected method involved mechanical initiation via lanyard connected to ballute.

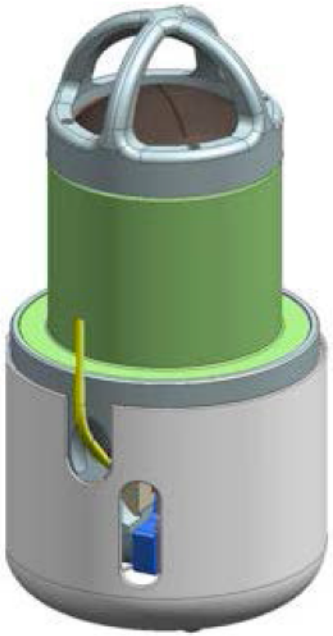

Device Components, Cont'd.

Section A

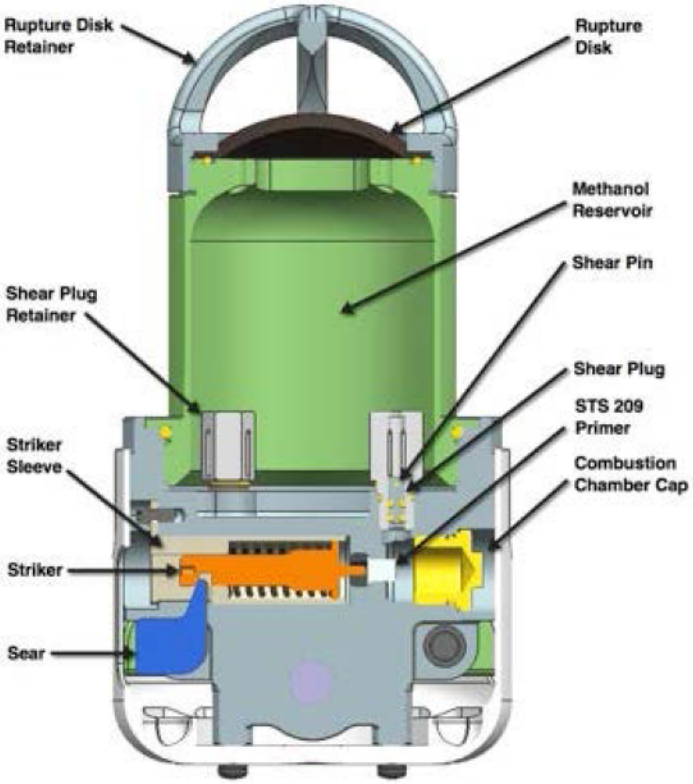

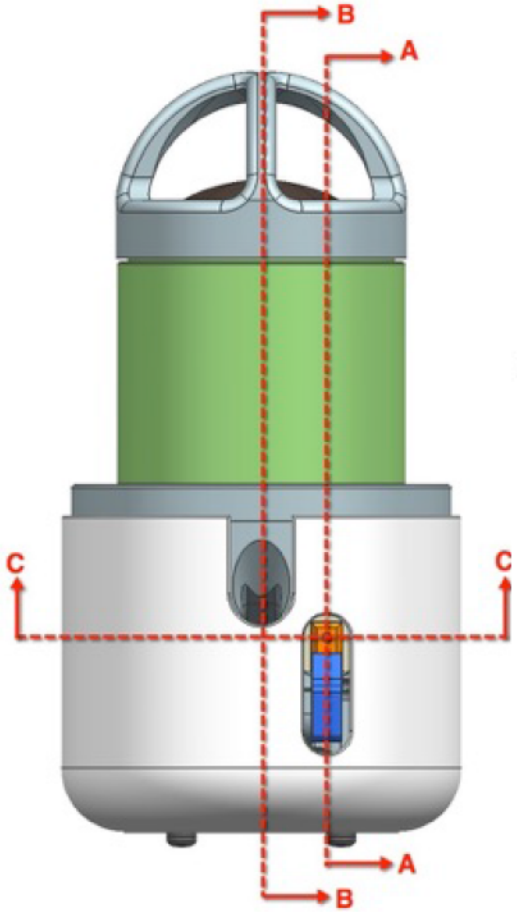

Section B

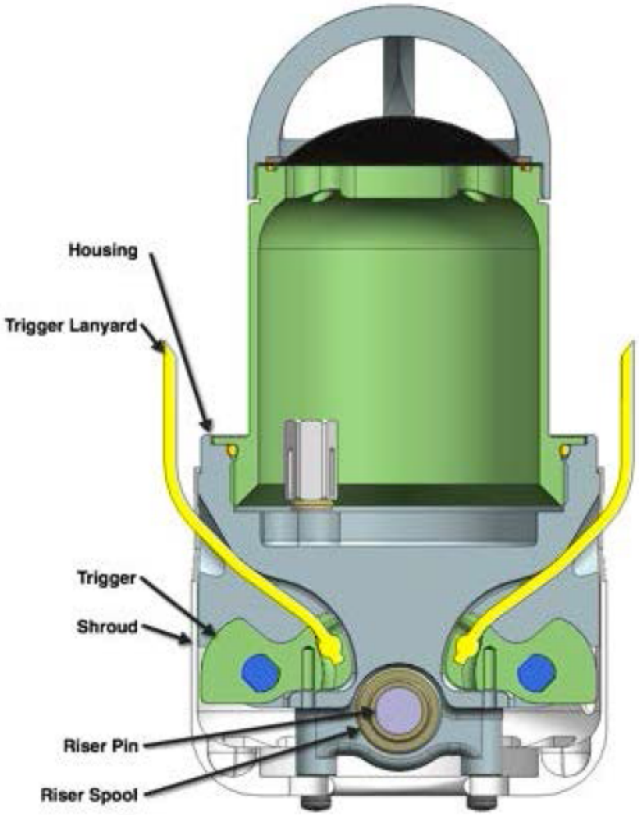

Interfaces

- IA interfaces to ballute via an aluminum attachment collar.
  - Collar attaches to 16 meridianal tapes
- IA interfaces to to SFDT vehicle via a 1” kevlar riser and pin.
- IA is initiated via two trigger lanyards that run along side the ballute, and are attached at the burble fence.

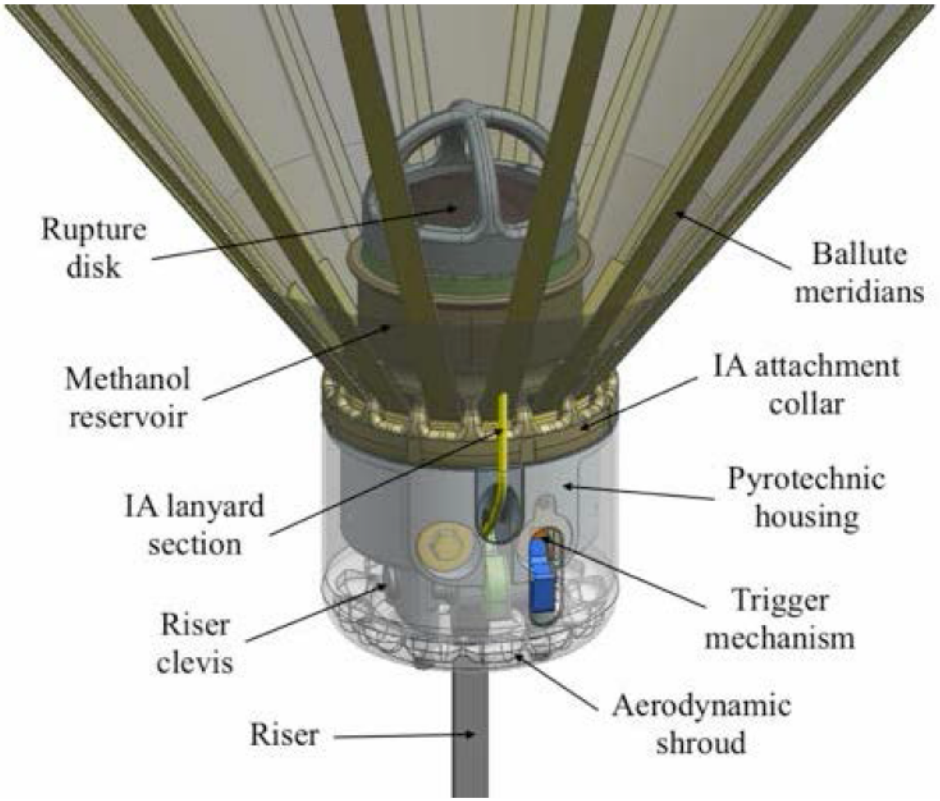

Device Components

- Firing mechanism contains the same basic components as modern small firearms.
- Lanyards are extracted from ballute as it is stretched taught during bag strip.
- Lanyard extraction initiates firing mechanism.

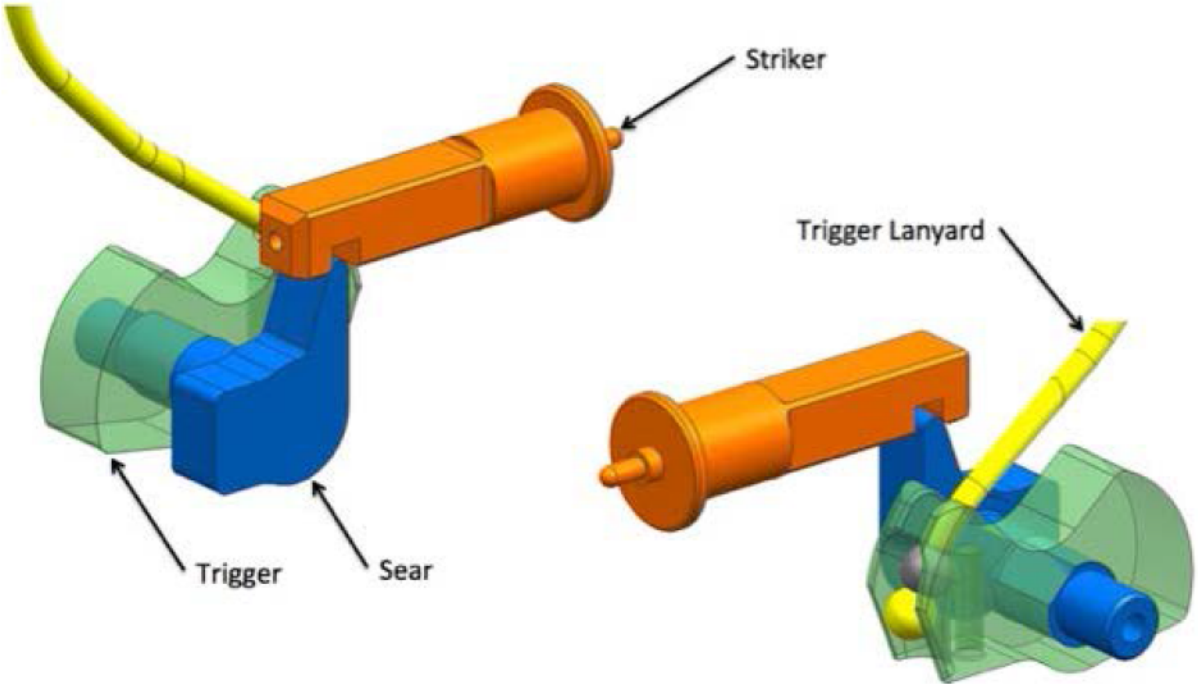

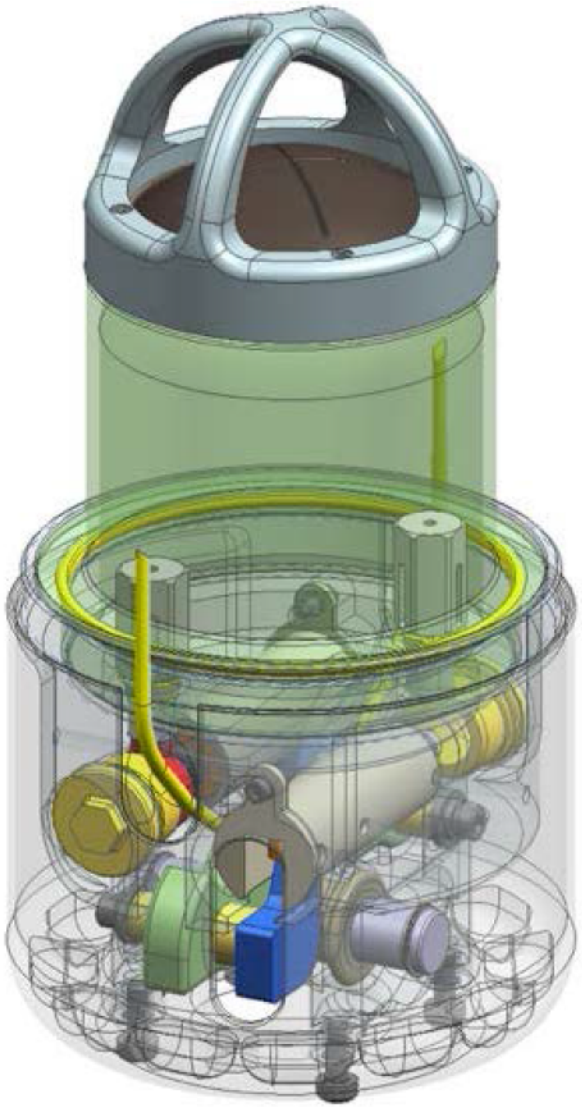

Mechanism Test Video

Mechanism Test, primer only, 100 lb tension in trigger lanyard

Vacuum Chamber Inflation Testing

Deployment of a 4.2 m ballute in 10 ft diameter vacuum chamber at 300 mTorr

Vacuum Chamber Deployment Video

Deployment of a 4.2 m ballute in 10 ft diameter vacuum chamber at 300 mTorr

Bench Top Mechanism Testing

- Verified operation of firing mechanism under a variety of conditions
  - Hot, cold temperature
  - Varying Lanyard orientations
  - Varying Lanyard Actuation Methods
    - Hand pull with load cell
    - Preloaded to various forces
    - Preloaded via various amounts of lanyard deflection
  - Helped to inform development of trigger lanyard design

Propellant Margin Testing

- Qualification of mechanism performance and hardware safety was verified using two propellant margin tests.
  - In both tests, chamber was filled with water to simulate the proper amount of ullage.
  - Strength margin test
    - 120% of nominal amount of propellant in both chambers.
    - No catastrophic hardware failure was observed.
  - Energy margin test
    - 67% of nominal amount of propellant in only one chamber.
    - Rupture of burst disk and fluid discharge were acceptable.

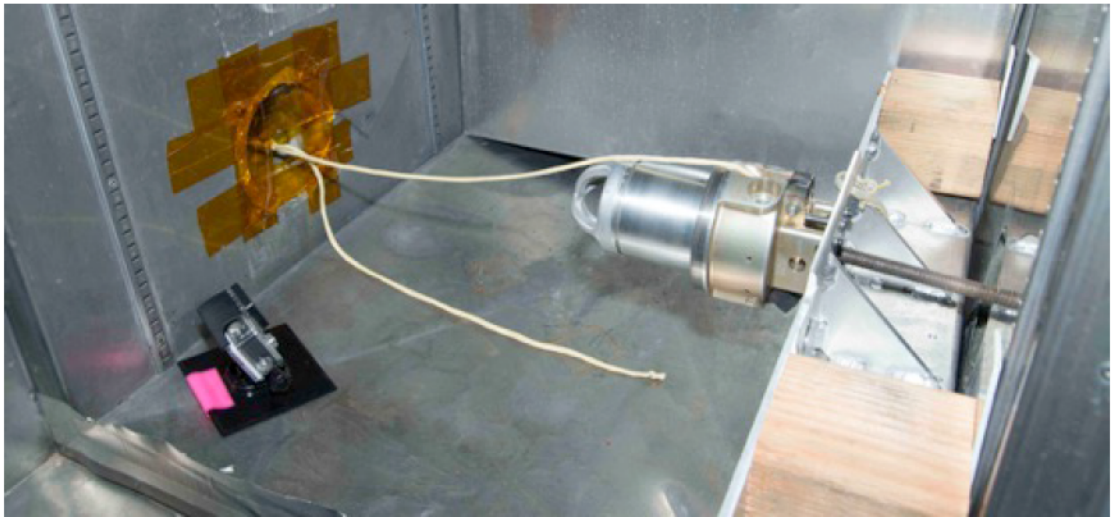

Margin Test Video

Energy Margin Test, 67% propellant load, H_2O in reservoir, ambient conditions

Propellant Testing Issues

Abnormal Dispersion

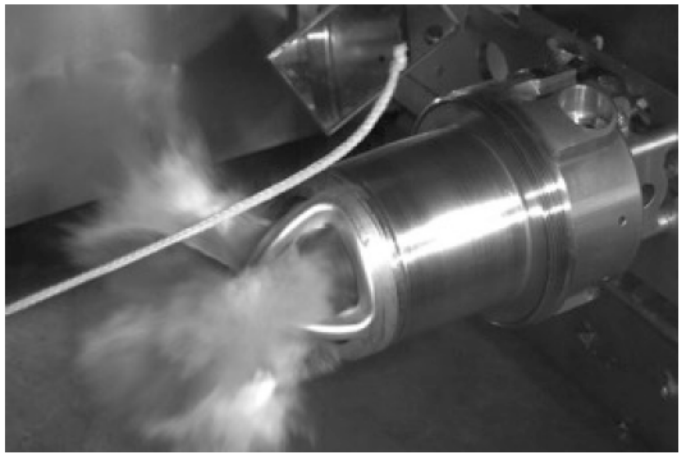

Nominal Dispersion

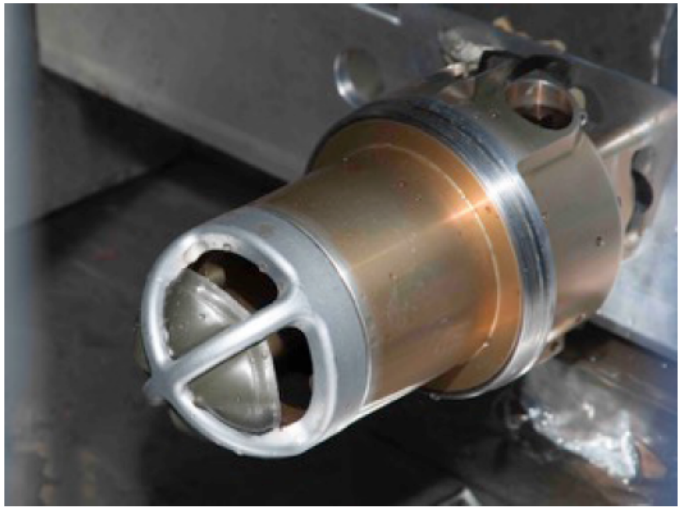

Abnormal Disk Failure, Post Test

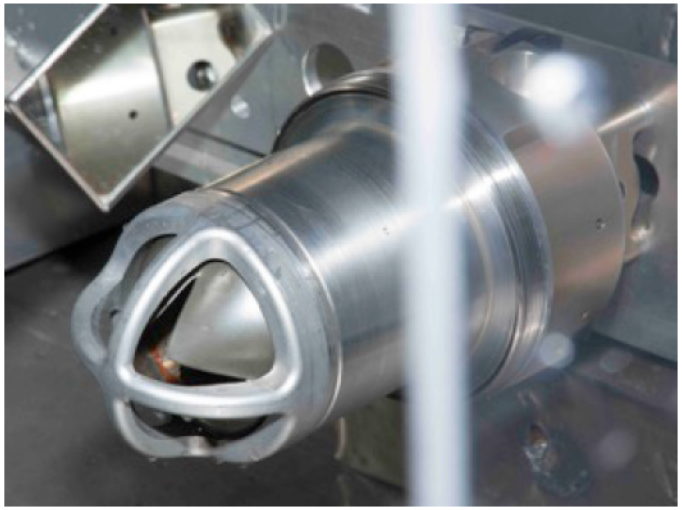

Nominal Disk Failure, Post Test

Vacuum Chamber Functional Testing

- Final verification of flight hardware operation prior to delivery.
- Reservoir filled with methanol solution, nominal amount of propellant
- In-flight conditions simulated using a vacuum chamber
  - 300 mTorr initial pressure
  - Ambient temperature
- Actuated using solenoids, operated from outside chamber.

Full Functional Test Video

Full Functional Test, 100% propellant load, methanol in reservoir, 300 mTorr, 20°C

In-Flight Performance

- SFDT-1 Test conducted on June 28, 2014
- PDD Deployment at altitude of 50 km, Mach 2.73
- Predicted temperature of IA at deployment was 50°C
- Predicted inflation pressure was 99% of expected ballute pressure
- Complete inflation occurred in approximately 0.56 seconds

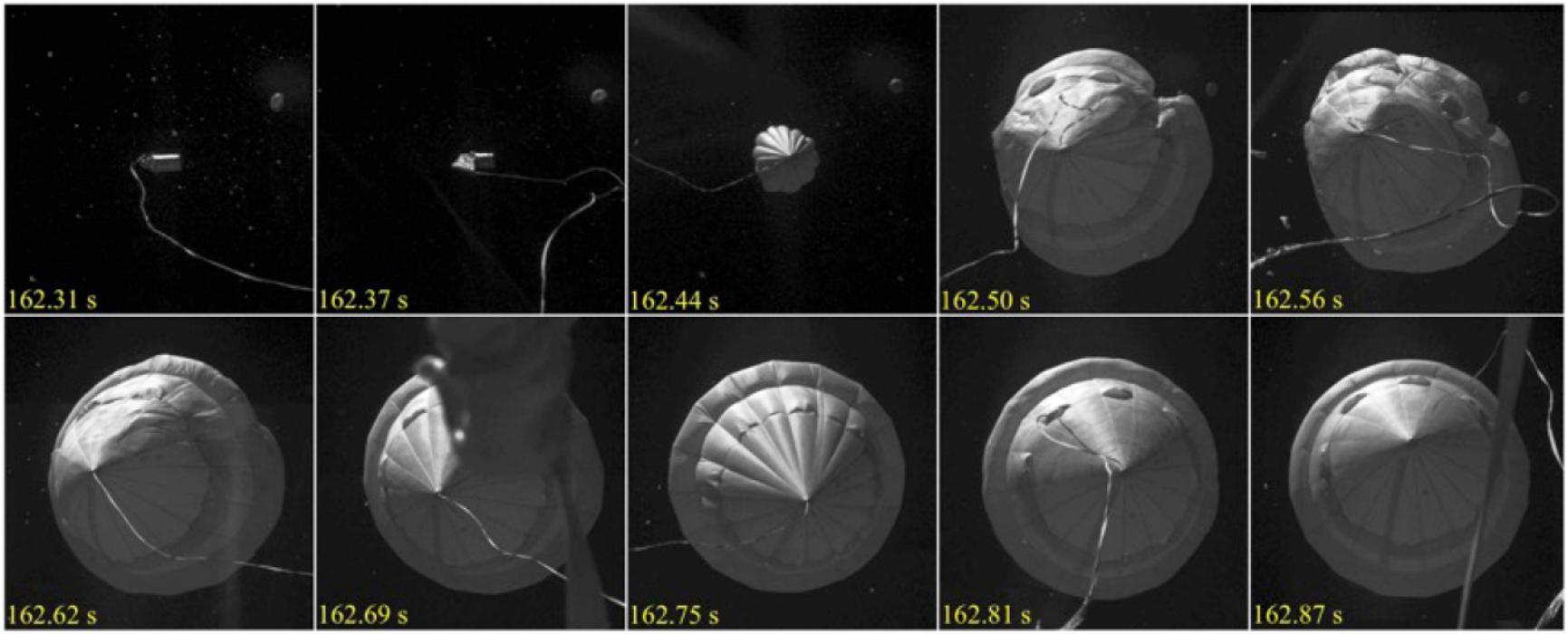

In-flight Performance Video

Deployment altitude 50 km, Mach 2.73, predicted PDD temperature 50°C