Advanced Computational Modeling Approaches for Shock Response Prediction

Armen Derkevorkian, Ali R. Kolaini, and Lee Peterson

Jet Propulsion Laboratory
California Institute of Technology

29th Aerospace Testing Seminar

27 October 2015

© 2015 California Institute of Technology. Government sponsorship acknowledged.

Jet Propulsion Laboratory
California Institute of Technology

Outline

- Introduction
- Description of the System
- Simulation Results
- Conclusion

© 2015 California Institute of Technology. Government sponsorship acknowledged.

Motivation

- The activation of pyroshock devices such as explosives, separation nuts, pin-pullers, etc. produces high frequency transient structural response, typically from few tens of Hz to several hundreds of kHz.

- Lack of reliable analytical tools makes the prediction of appropriate design and qualification test levels a challenge.

- In the past few decades, several attempts have been made to develop methodologies that predict the structural responses to shock environments.

- Currently, there is no validated approach that is viable to predict shock environments overt the full frequency range (i.e., ~100 Hz to 10 kHz).

© 2015 California Institute of Technology. Government sponsorship acknowledged.

Scope

- Model, analyze, and interpret space structural systems with complex interfaces and discontinuities, subjected to shock loads
- Assess the viability of a suite of numerical tools to simulate transient, non-linear solid mechanics and structural dynamics problems, such as shock wave propagation

© 2015 California Institute of Technology. Government sponsorship acknowledged.

Simulations on the Mini-Module from the Mars Science Laboratory (MSL)

Image Credit: NASA/JPL-Caltech

Mini-Module

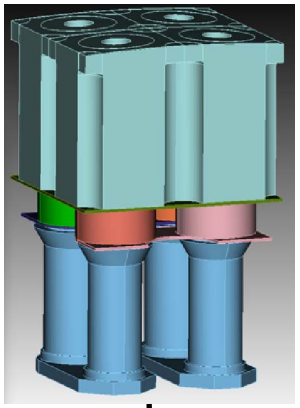

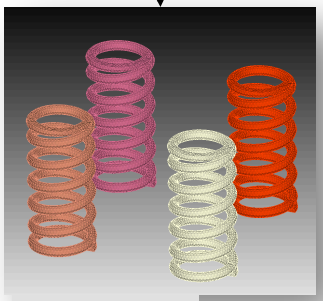

Springs

© 2015 California Institute of Technology. Government sponsorship acknowledged.

Jet Propulsion Laboratory
California Institute of Technology

Computational Tools Used for this Study

- **Cubit** (Pre-processor)
  - Geometry and Mesh Generation Toolkit
  - Robust generation of 2D and 3D Finite Element meshes
  - Geometry Power Tool to help detect and repair problems
  - Efficient algorithm for large hex meshes of complicated assemblies

- **Sierra/Solid Mechanics** (Solver)
  - Adagio (implicit) and Presto (explicit) are part of the Sierra multi-physics codes developed by Sandia National Laboratory
  - Lagrangian, three-dimensional code for finite element analysis of solids and structures
  - Efficient and robust solution of models with extensive contact interfaces subjected to large, suddenly applied loads

- **Paraview** (Post-processor)
  - Stands for "Parallel Visualization Application", open-source, multi-platform
  - Designed to visualize data sets of varying sizes from small to very large

© 2015 California Institute of Technology. Government sponsorship acknowledged.

Pyroshock Simulation Protocol

- Commanded z acceleration on the top (dz_dot_dot)

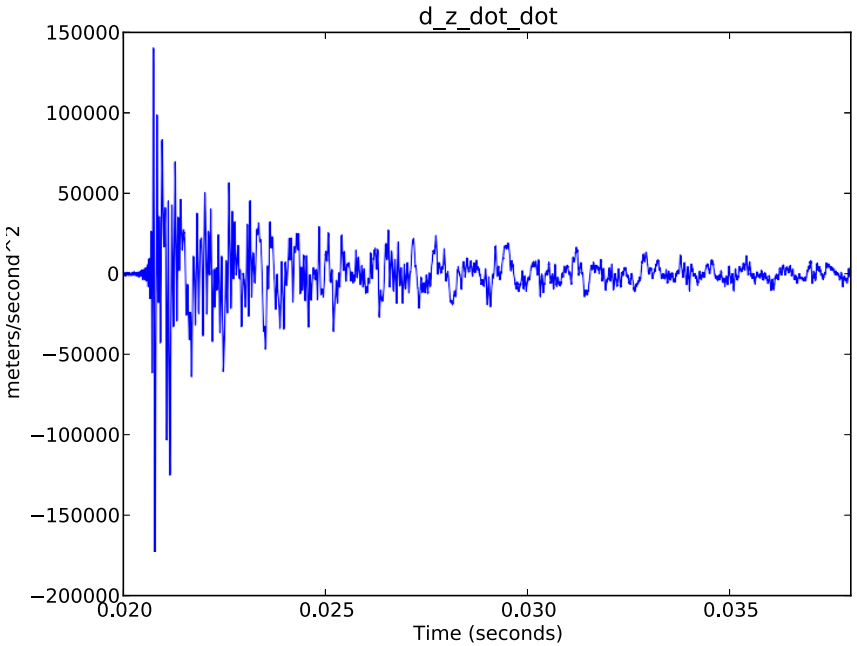

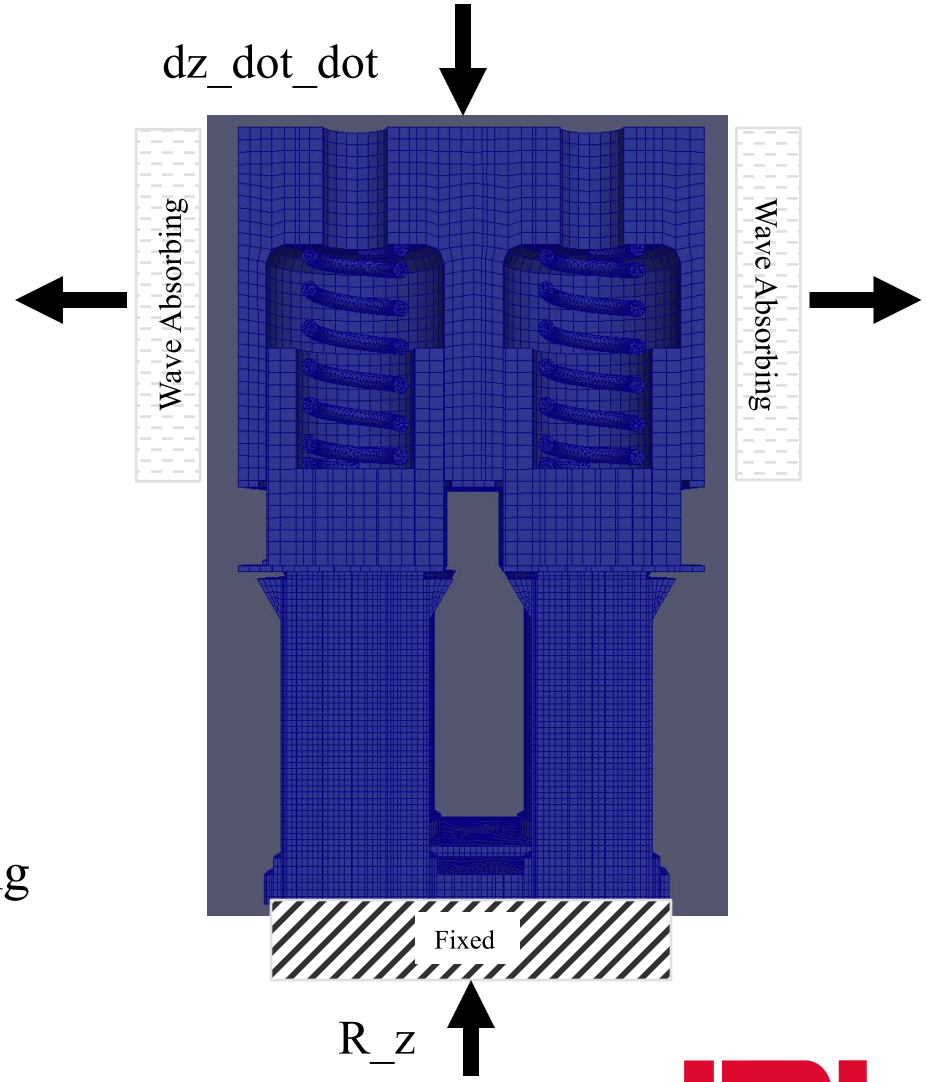

- Silent (absorptive) boundaries on housing sides
- Hot shoes constrained (no sliding)
- Sliding contact with friction elsewhere

© 2015 California Institute of Technology. Government sponsorship acknowledged.

Low Frequency Preload at the Beginning of the Simulation

- Applied preload with the explicit solver
  - Required due to instability in the spring initial CAD configuration
  - Buckles slightly to the right to seat in the off-center flats (non-symmetric coil ends)
  - Nearly doubles the computer time required
- Applied preload displacement
  - 0.02 seconds
  - Induced loads insignificant
  - 51N preload (two pairs of legs)

Before Preload

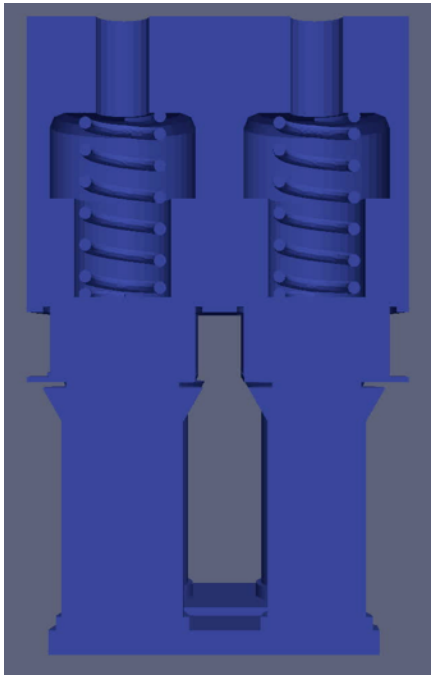

After Preload

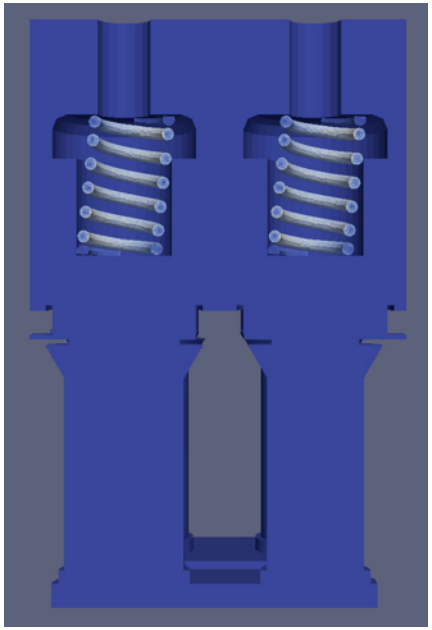

© 2015 California Institute of Technology. Government sponsorship acknowledged.

Shock Response - (Zoomed Von Mises Stress)

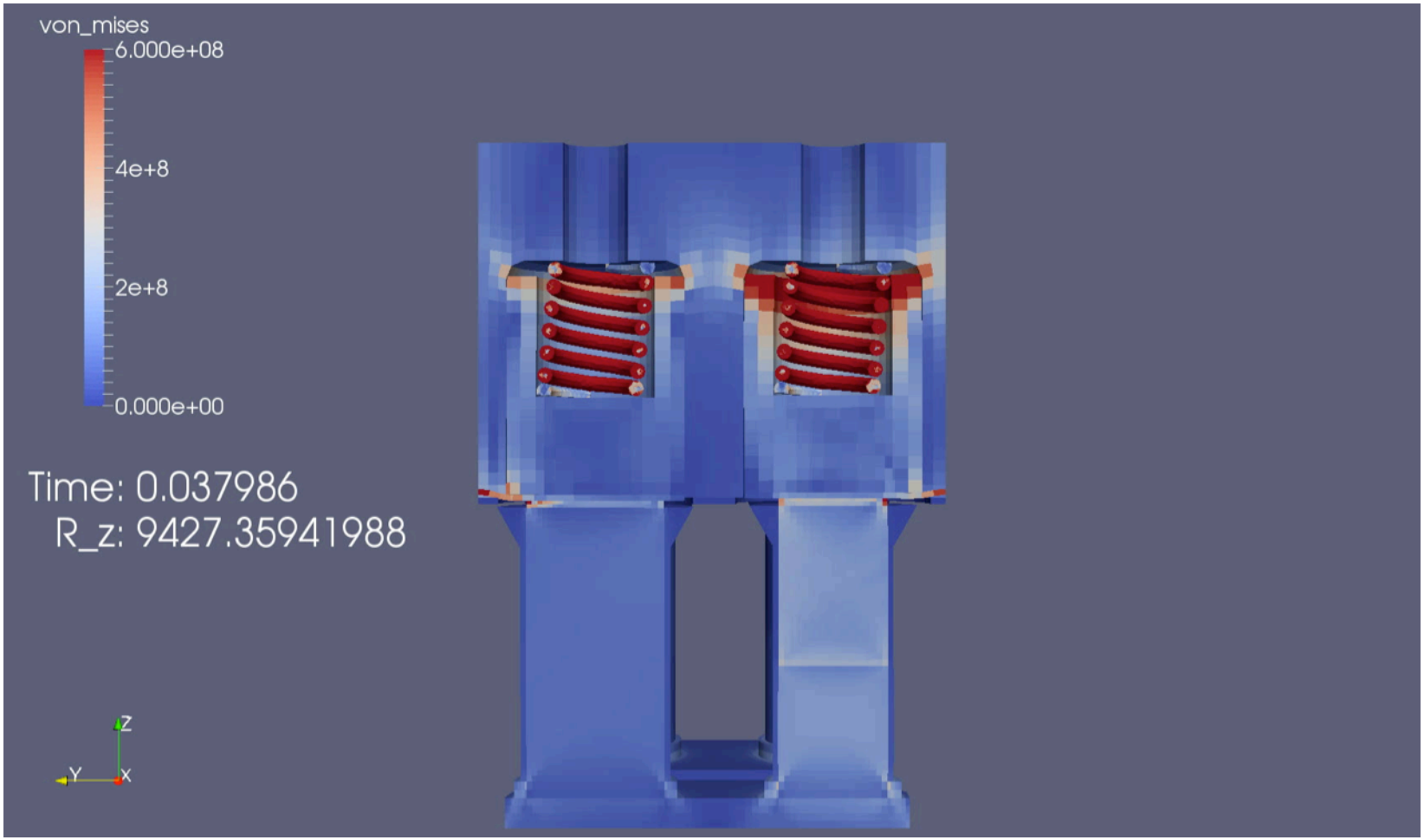

© 2015 California Institute of Technology. Government sponsorship acknowledged.

Jet Propulsion Laboratory
California Institute of Technology

Shock Response Animation - (Zoomed Von Mises Stress)

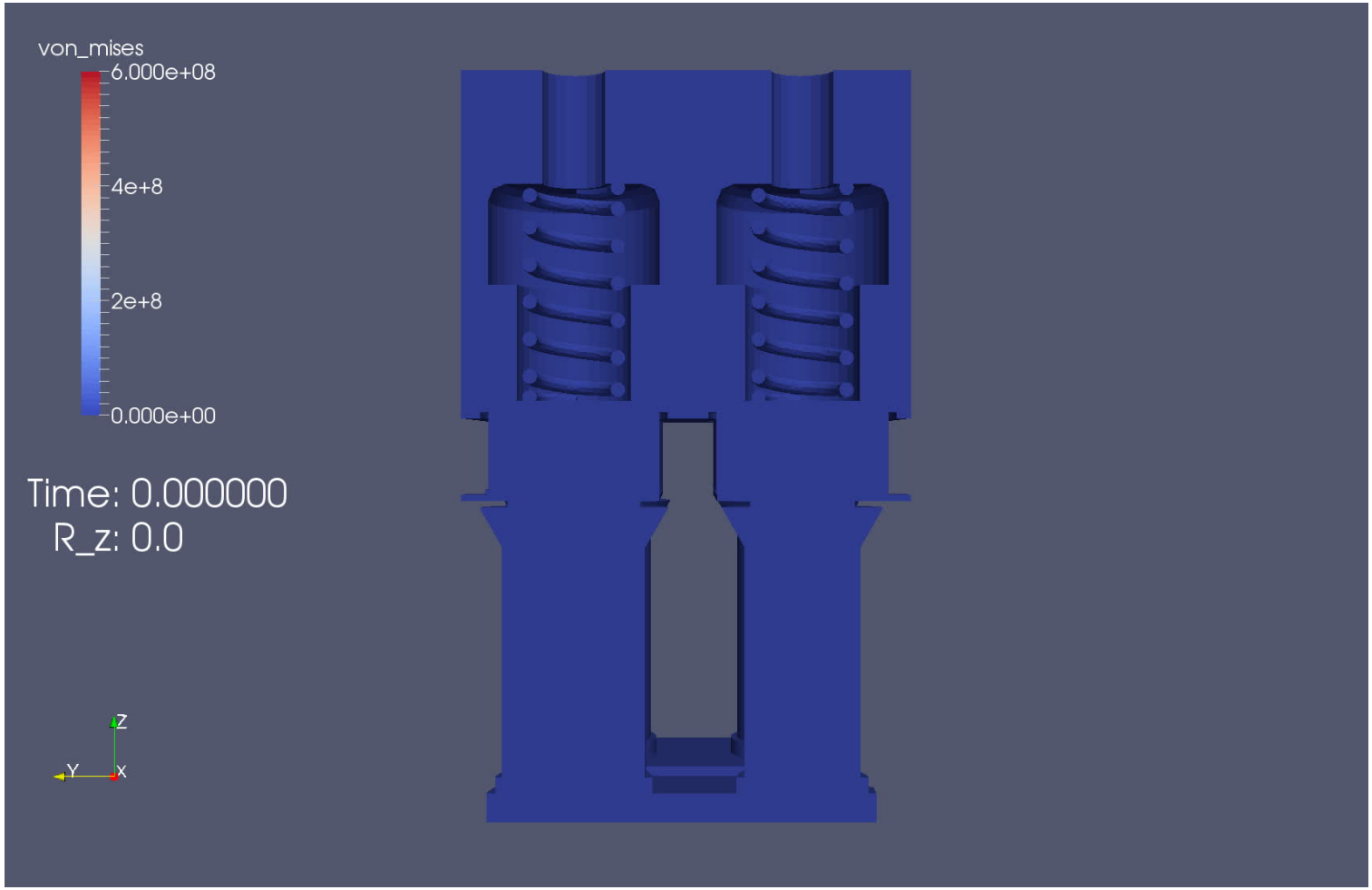

- Springs tilting after the preload, due to non-symmetric nature of the spring ends
- Contacts between springs and piston edges at some locations were observed

© 2015 California Institute of Technology. Government sponsorship acknowledged.

Initial Time Delay in the Pyroshock Response

- The first structural response is seen after ~0.0005 sec from the initial input signal.
- Preload unloads twice
  - At approximately 2x and 4x the initial delay
- A ramp-up phenomenon is observed in the force time-history. May be due to numerical errors

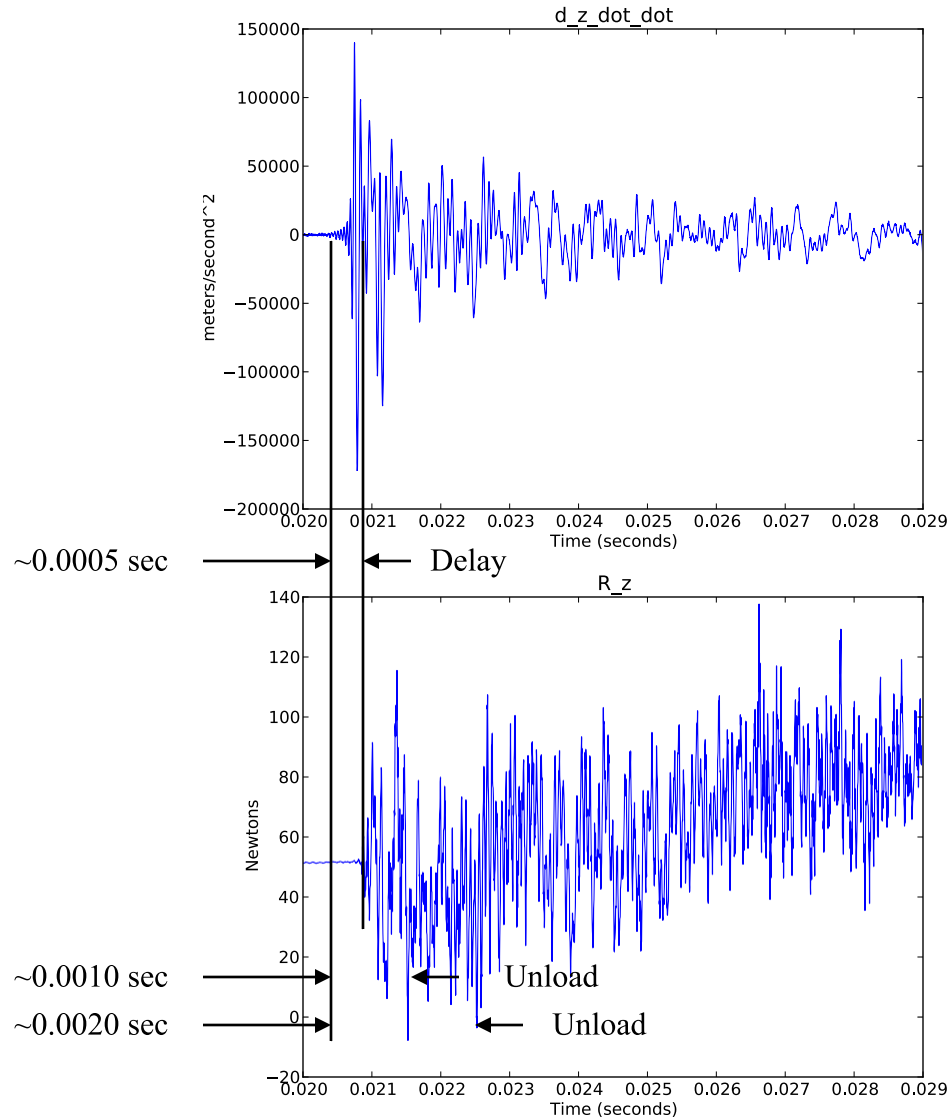

© 2015 California Institute of Technology. Government sponsorship acknowledged.

Jet Propulsion Laboratory
California Institute of Technology

Reaction Force During the Full Simulation

- Total of 40 milliseconds
  - First half is the preload. Second half is the pyroshock
  - 20 milliseconds was used for the preload to avoid invoking any undesired dynamic effects that may generate from applying the force faster

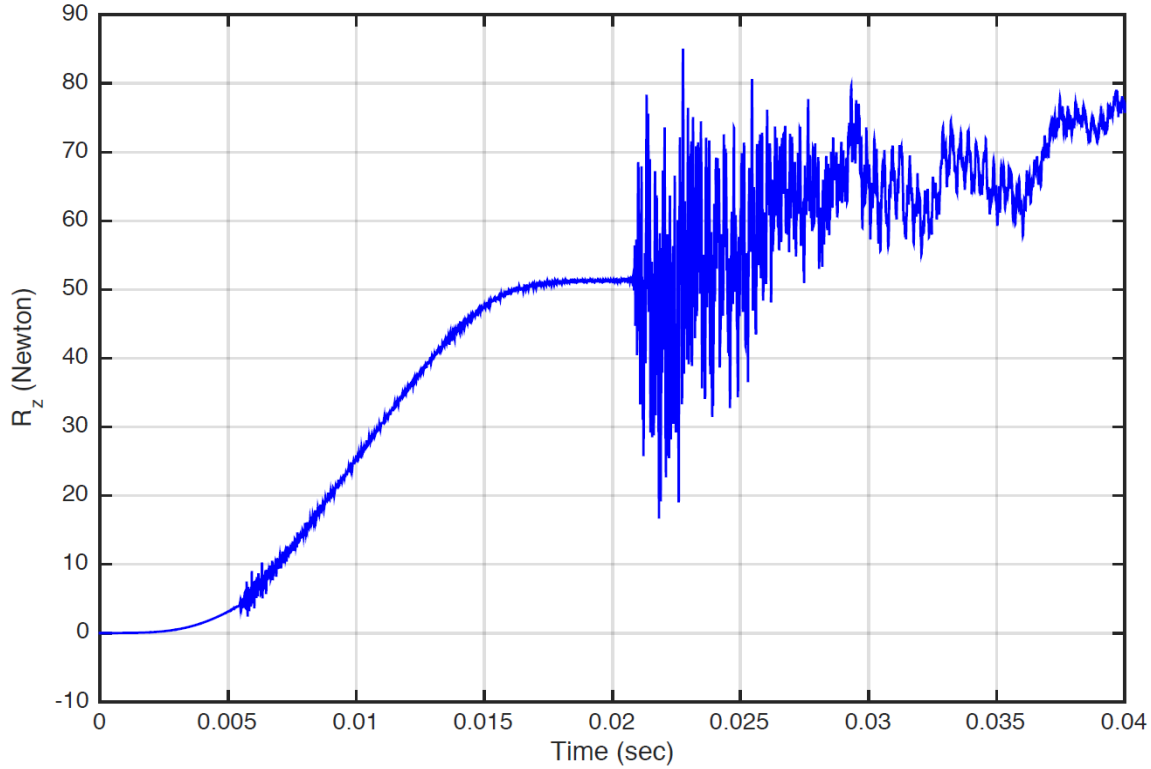

- Reaction force diverging. May be due numerical errors, as a result of an inadequate data processing of the input signal
- Low frequency component in the response at about ~3KHz, potentially due to spring oscillation

© 2015 California Institute of Technology. Government sponsorship acknowledged.

Conclusions

- The computational tools used in this study can potentially become a viable method to predict shock response in complex structures
- These numerical tools can detect details of the structural response and wave propagation in high frequency ranges
- Large-scale cases can be solved using parallel processors. However, this leads to significant computational cost
- Just like other numerical analysis, the results shown in this study need to be validated with experimental test results
    - Experimental validation is in progress
- Given the intricate details of these sophisticated tools one has to be very careful in the modeling, interpretation, and the choice of the inputs that go in the model. Avoid "junk-in-junk-out"

© 2015 California Institute of Technology. Government sponsorship acknowledged.

Selected References

- Hamelblau, H., Dennis L. Kern, Jerome E. Manning, Allan G. Pierson, and Sheldon Rubin, "Dynamics Environmental Criteria," *NASA Technical Handbook*, NASA-HDBK-7005, December 4, (2000).

- Kolaini, A.R., Reza Nayeri, and Dennis L. Kern, "Pyroshock Simulation Systems: Are We Correctly Qualifying Flight Hardware for Pyroshock Environments?" *Proc. 25th Aerospace Testing Seminar*, Oct. (2009), Los Angeles, CA.

- Thomas, J.D., "Sierra/Solid Mechanics 4.22 User's Guide." No. SAND2011-7597. *Sandia National Laboratories*, (2011).

- Kotzias, B., and Albus, J., "Pyrotechnique Shocks in Launch Vehicles." *Proc. 5th European Conference for Aerospace Sciences (EUCASS)*, July (2013), Munich, Germany.

© 2015 California Institute of Technology. Government sponsorship acknowledged.

Acknowledgments

The authors acknowledge the help and support of David Woerner, Terry Hendricks, and Bill Nesmith of the Jet Propulsion Laboratory.

© 2015 California Institute of Technology. Government sponsorship acknowledged.