National Aeronautics and Space Administration

# Mars Surface Habitability Options

A. Scott Howe, JPL
Matt Simon, LaRC
David Smitherman, MSFC
Robert Howard, Larry Toups, JSC
Stephen Hoffman, SAI

9 March 2015

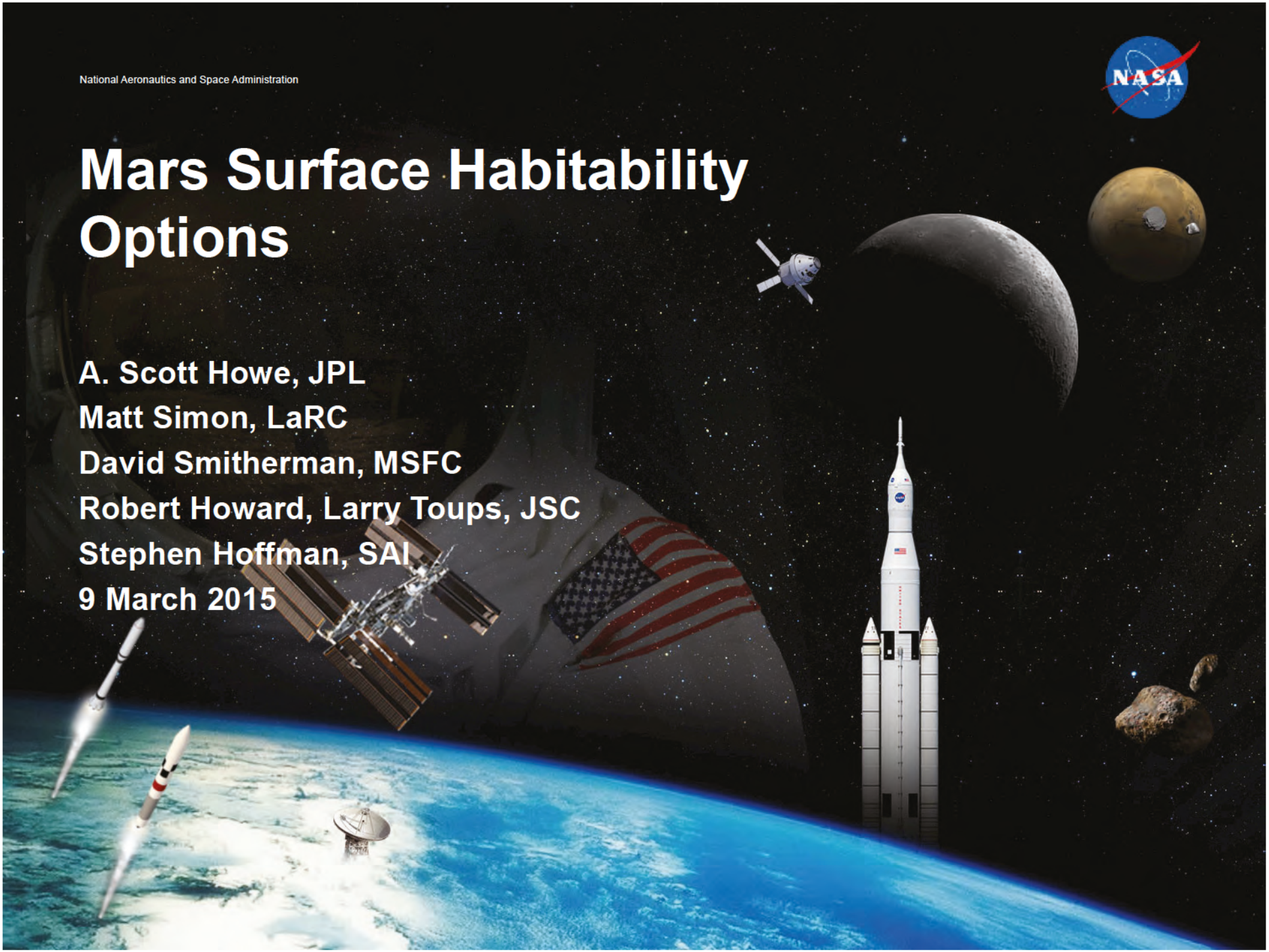

# Mars Surface Habitability Options

- **Base assumptions**
  - 500 day, 4 crew
  - 2 MMSEV rovers
  - Maintenance airlock (internal or external)
  - Four possible landers: 15t, 18t, 27t, 41t
  - Crew lander and ascent vehicle delivered separately
  - Surface power and exploration equipment delivered separately
  - Flat-top lander vs sky crane delivery
- **Habitation options**
  - Baseline monolithic
  - Vertical modular
    - Core + hab module
    - Core + inflatable (HDU)
  - SLS-EUC derived
    - Bottom docking
    - Side docking
  - Small-diameter horizontal modular
    - Multi-module
    - Mid-expandable
    - Inflatable hybrid

# Baseline Assumptions

## BASELINE ASSUMPTIONS

**Structure and Mechanisms**

- Metallic, cylindrical habitat: max 7.2 m diameter
- 0.3 m for port extrusions, attachments, structure
- Min.2.5 m barrel length for reasonable ceiling height
- ~22 $m^3$/person habitable volume
- Secondary structure 2.46 km/$m^2$ of habitat surf area
- Launch integration 2% of habitat gross mass
- Four 0.5 m diameter windows
- 1 exterior hatch
- 2 docking mechanisms, 1 docking tunnels
- Atmospheric pressure = 70.3 kPa (10.2 psi)

**Avionics**

- Provide CC&DH, GN&C, communications

**Thermal Control**

- External fluid loop using Ammonia
- Internal fluid loop using 60% prop glycol/water
- Xx kW heat rejection using ISS-type radiators

**Maintenance and Spares**

- Sized using Monte Carlo simulation engine (EMAT)

**Reserves**

- Margin Growth Allowance: 20% of basic mass
- Project Manager's Reserve: 10% of basic mass

**Protection**

- 20 layers multi-layer insulation
- 5.8 cm water-wall on crew quarters for SPE protection

**Power**

- ~XX kWe end of life power provided by SEP
- 120 V DC power management (92% efficient)
- 3 Li-ion batteries (200 W-hr/kg) ~XX kW-hr storage

**Environmental Control and Life Support**

- Scaled ISS level ECLSS (100% air, ~85% water) hardware for 380 days
- 10% mass for advanced diagnostics and maintainability
- 30 days open loop contingency consumables

**Crew Equipment & Accommodations**

- Standard suite for 180-360 day deep-space
- Assume freezer for missions longer than 1-year
- Crew items, sink (spigot), freezer, microwave, washer, dryer, 2 vacuums, laptop, trash compactor, printer, hand tools, test equipment, ergometer, photography, exercise, treadmill, table

**Logistics**

- Sized based upon ISS usage rates for 1000 days + 30 days contingency

**Extra-Vehicular Activity (EVA)**

- 600 kg 6 $m^3$ internal airlock
- 2 person EVAs using shuttle-class internal airlock
- 2 spare per suit for every suit component
- 1 EVA per 3 days

# Monolithic Outpost Baseline

Monolithic

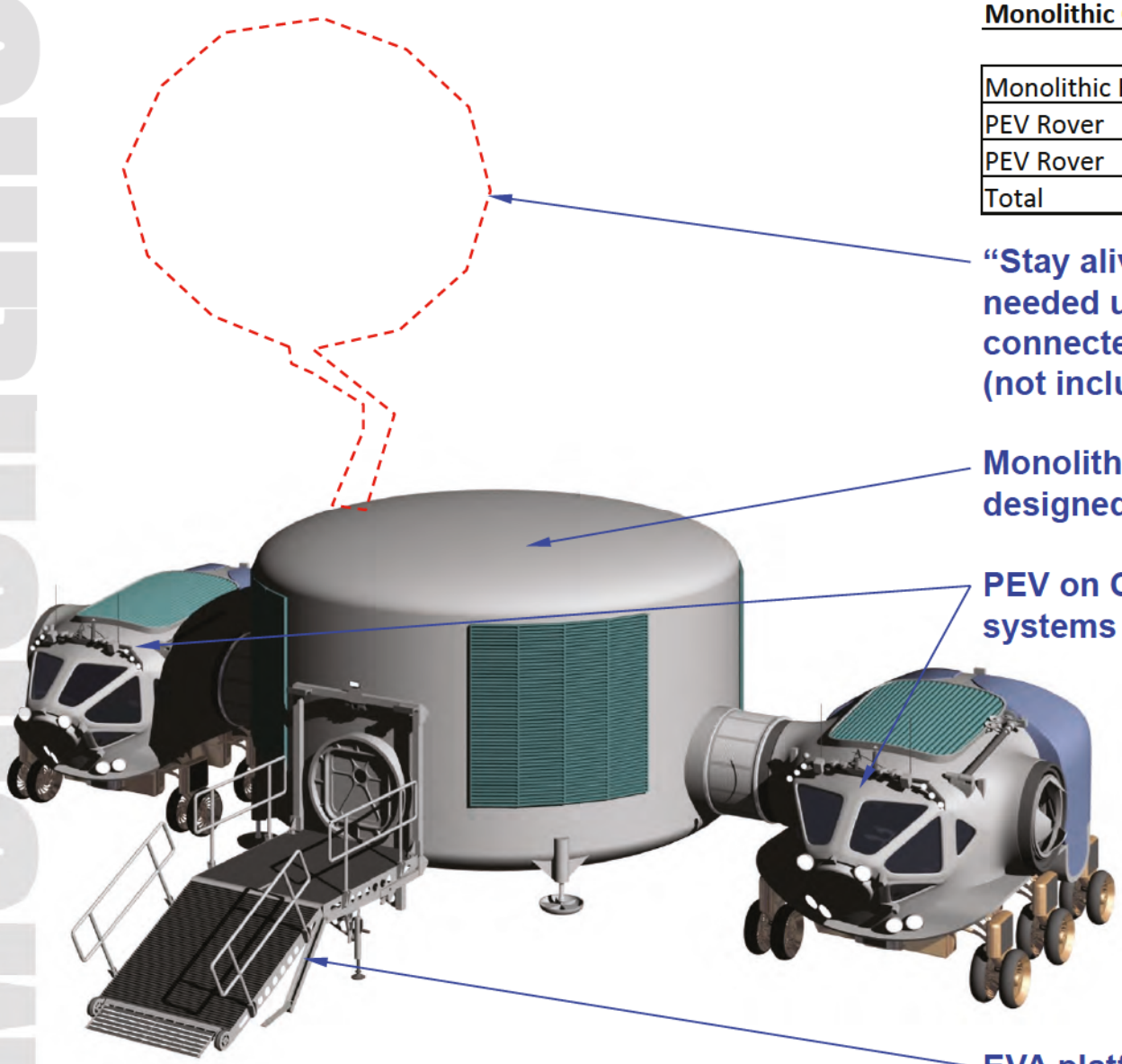

**Monolithic Outpost**

| | kg | $m^3$ |
|---|---|---|
| Monolithic Hab | 28440.0 | 159.7 |
| PEV Rover | 6809.0 | 12.0 |
| PEV Rover | 6809.0 | 12.0 |
| Total | 42058.0 | 183.7 |

**"Stay alive" power as needed until habitat is connected to power system (not included in study)**

**Monolithic Habitat, custom designed for 500 days**

**PEV on Chariot mobility systems**

**EVA platform**

# Modular Vertical Assumptions

- **The Modular Vertical system is derived from well-studied vertical habitat concepts such as the Habitat Demonstration Unit (HDU)**
- **Base Assumptions**
  - 500 day
  - 4 crew
  - 2 MMSEV rovers
  - Maintenance airlock (internal or external)
  - Crew lander and ascent vehicle delivered separately
  - Surface power and exploration equipment delivered separately

Vertical

# Modular Vertical Precedents

# Modular Vertical Precedents

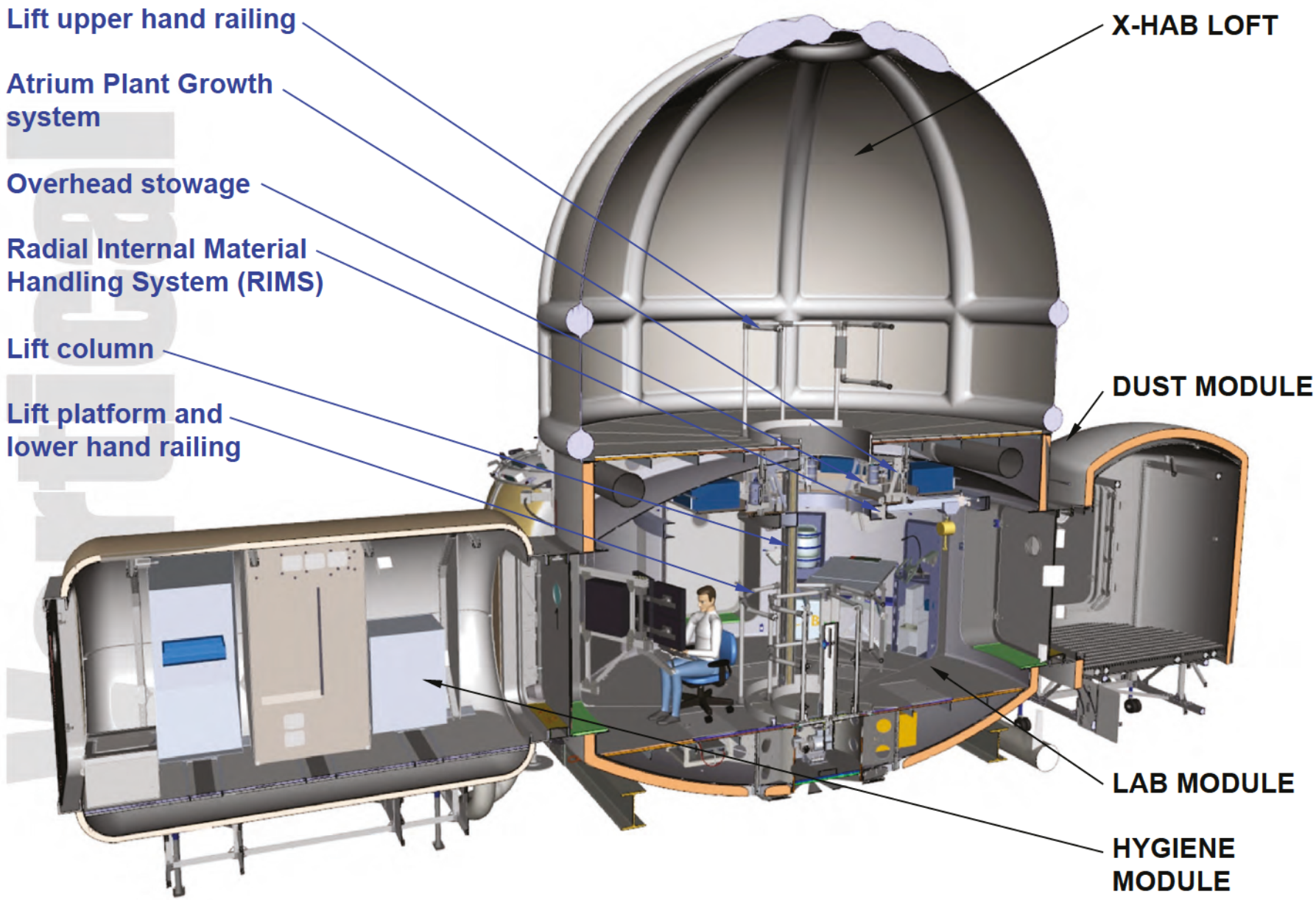

# Modular Vertical Precedents: Lunar Scenario

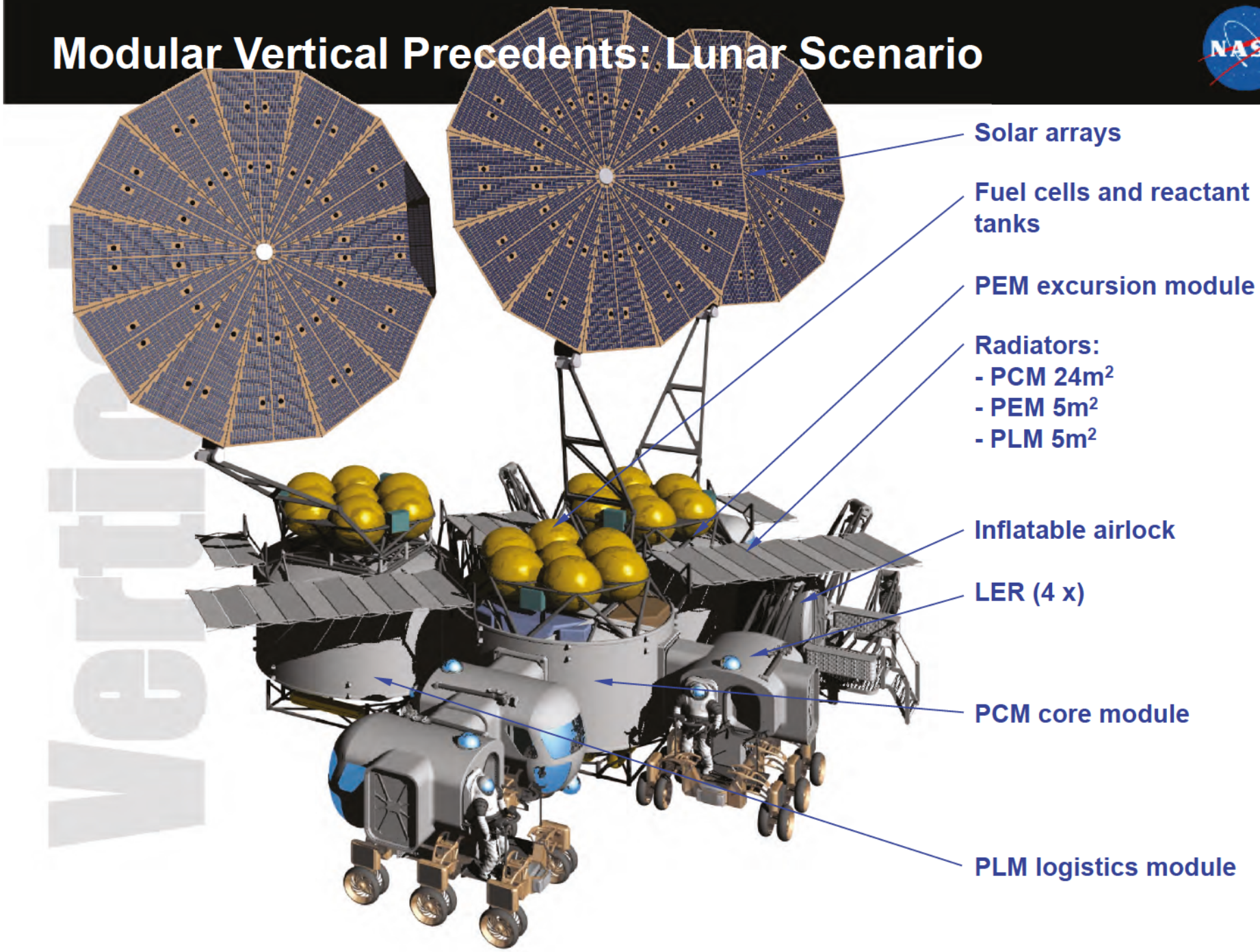

# Modular Vertical Outpost

**Modular Vertical Outpost**

| | |
|---|---|
| Habitable Volume (m3) | 117.4 |
| Non-habitable Volume | 100.6 |
| Pressurized Volume | 218.0 |

| | |
|---|---|
| Vertical Core (kg) | 12482.0 |
| Vertical Hab | 18793.0 |
| Rover | 6492.0 |
| Rover | 6492.0 |
| Total Mass | 44259.0 |

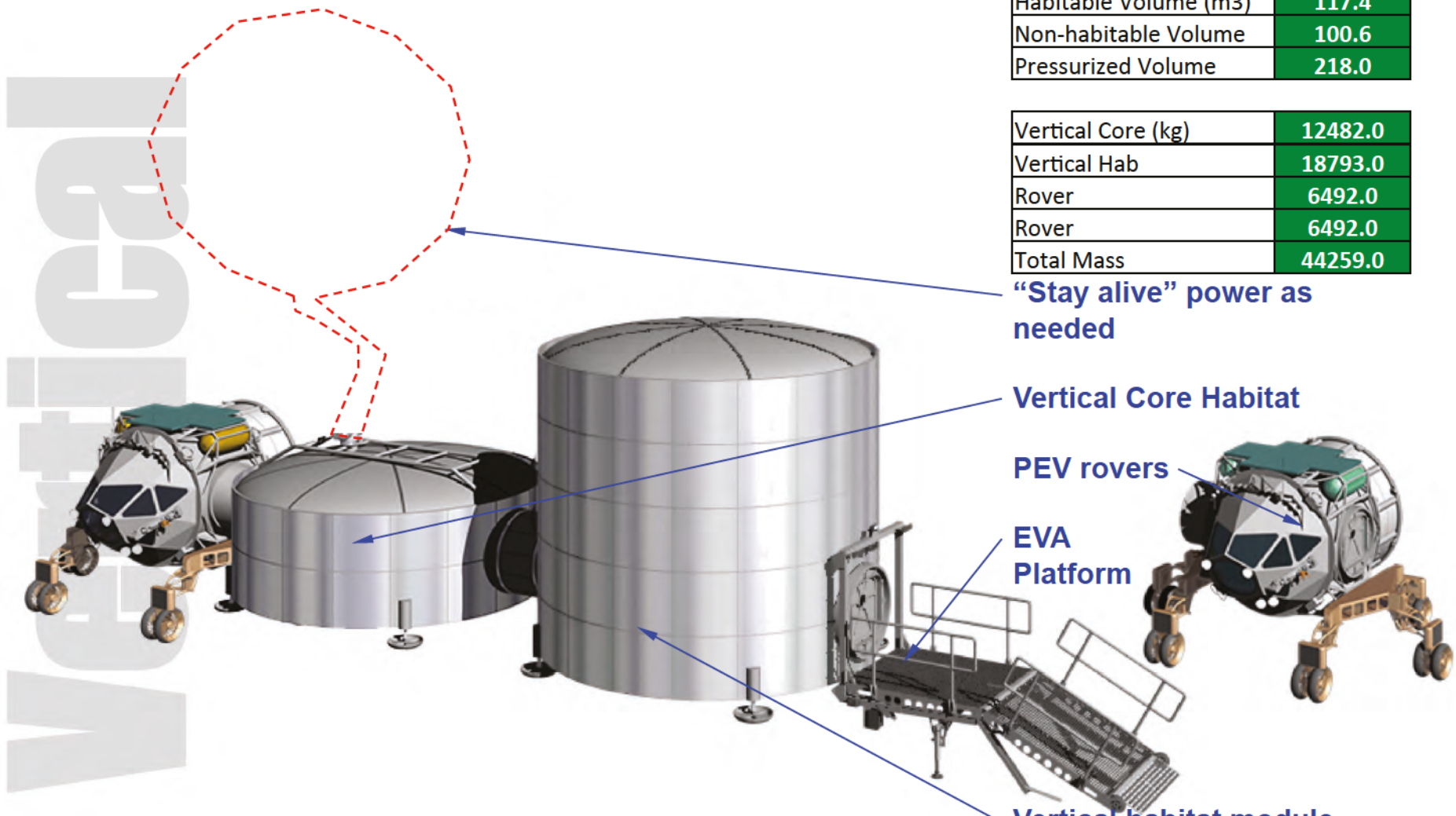

# Modular Vertical Inflatable Outpost

**Modular Vertical Inflatable Outpost**

| | kg | $m^3$ |
|---|---|---|
| Vertical Core | 12482.0 | 52.8 |
| Vertical Inflatable | 17732.0 | 123.8 |
| PEV Rover | 6809.0 | 12.0 |
| PEV Rover | 6809.0 | 12.0 |
| Inflatable Airlock | 3464.0 | 10.6 |
| Total | 47296.0 | 211.2 |

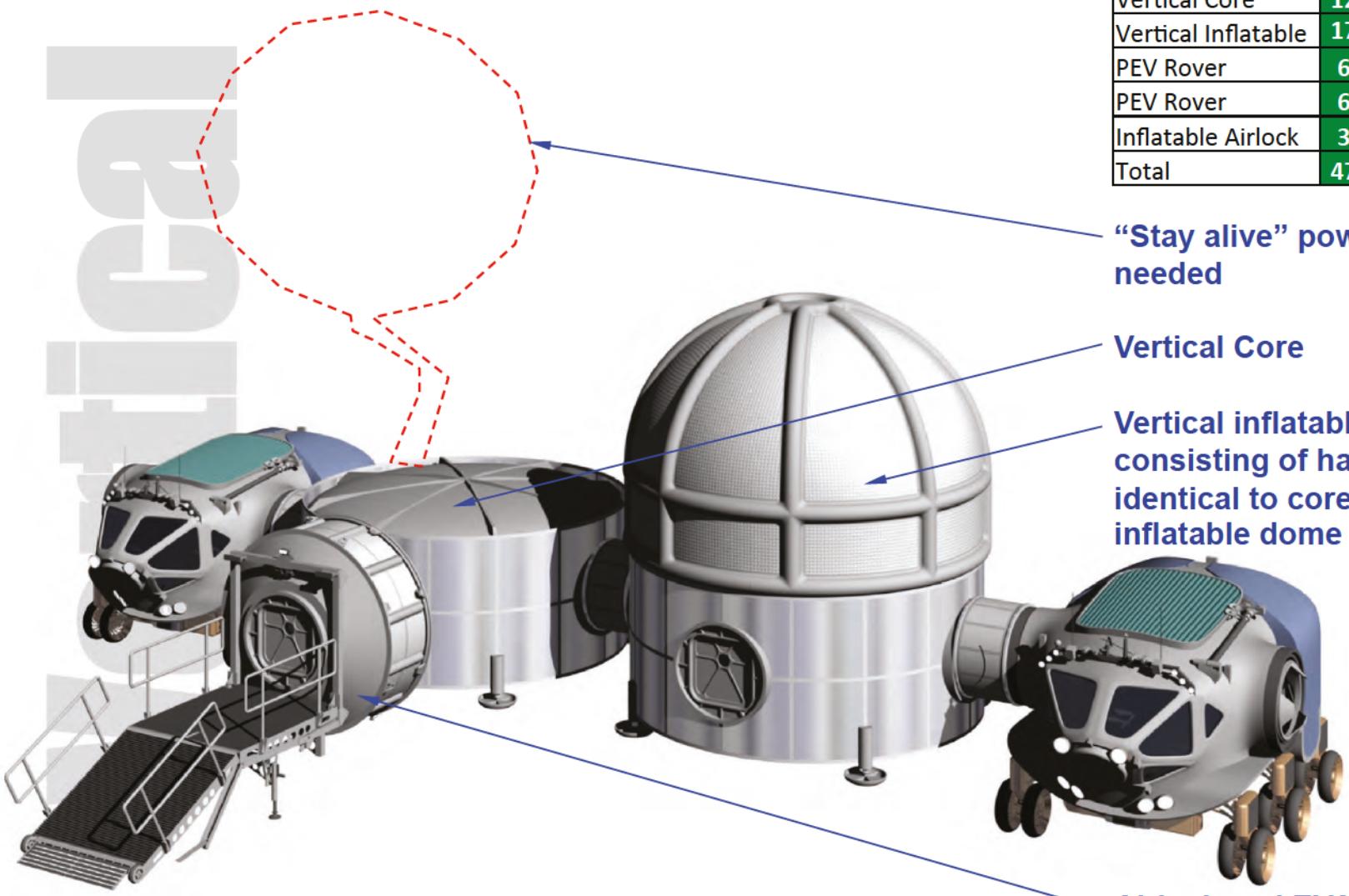

# SLS-Derived Transit / Surface Common

- **Habitat design dilemma:**
  - Cannot take a habitat designed for microgravity and use it in a planetary environment
  - Cannot take a habitat designed for planetary environments and use it in microgravity
  - Cannot afford to set up distinct habitat project offices for each destination:
  - Lunar Surface, Mars Surface, NEA Transit, Mars Transit, Cislunar, Captured Asteroid, Martian Moons
- **Is it possible to consider all environments upfront and design a habitat applicable to all destinations?**

SLS-EIS

# SLS / Transit / Mars Forward

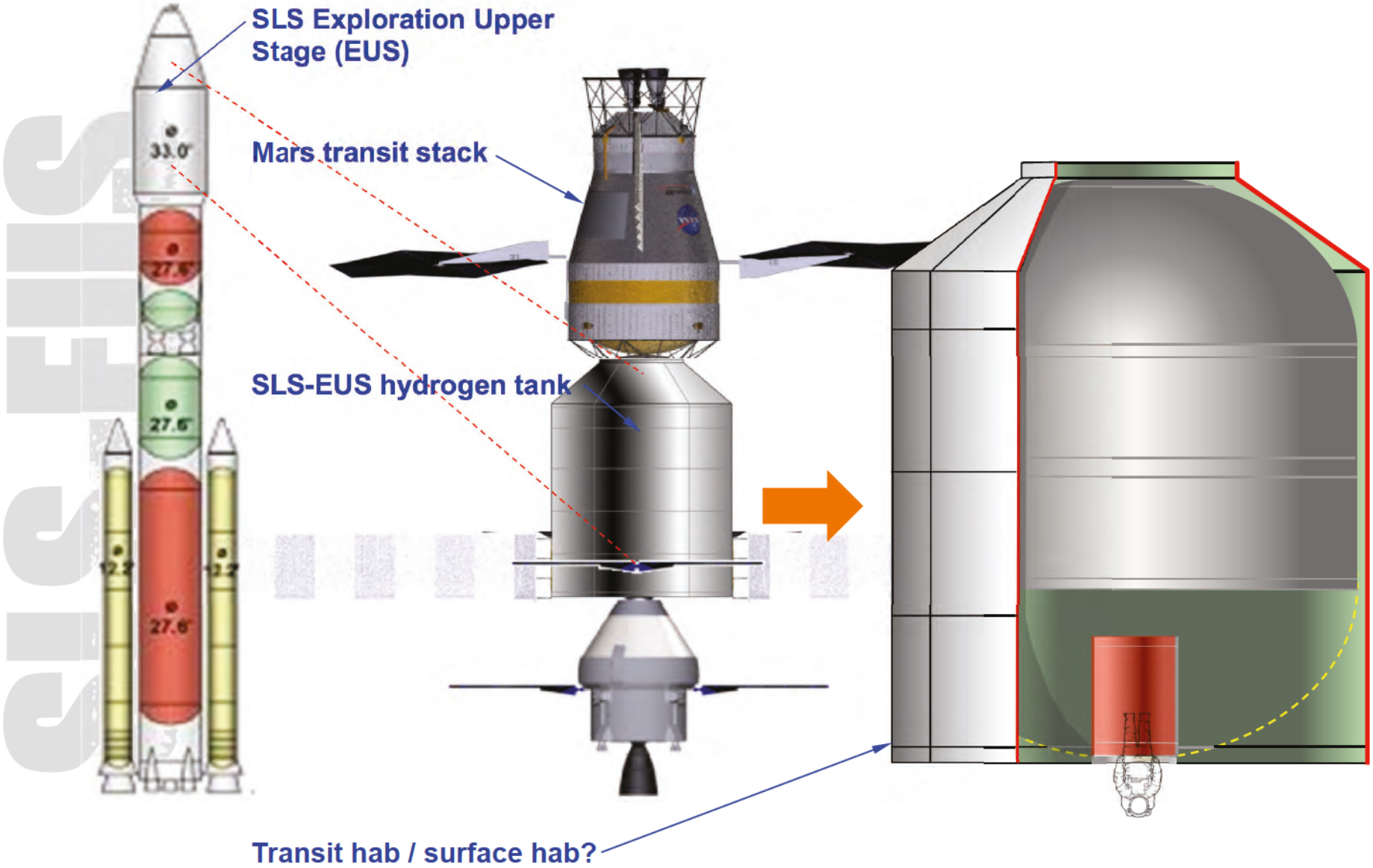

# SLS-EUS Ground Rules & Assumptions

## Mars Habitat Lander

- 4 crew
- 500 days on the surface
- Logistics provided with pressurized rovers delivered separately
- Crew lander and Mars Ascent Vehicle delivered separately
- Surface power and exploration equipment delivered separately
- Logistics, subsystem masses and volumes taken from Matt Simon's Monolithic baseline

## Mass and Volume Estimate

- Mass estimates are derived from previous Skylab II and EUS studies, and were not derived by new subsystem designs. Further mass reductions are likely with more detailed design and analysis.
- Pressurized volume is based on designs.
- Habitable volume is derived from previous Skylab II systems estimates.

# SLS-EUS Bottom-dock Outpost

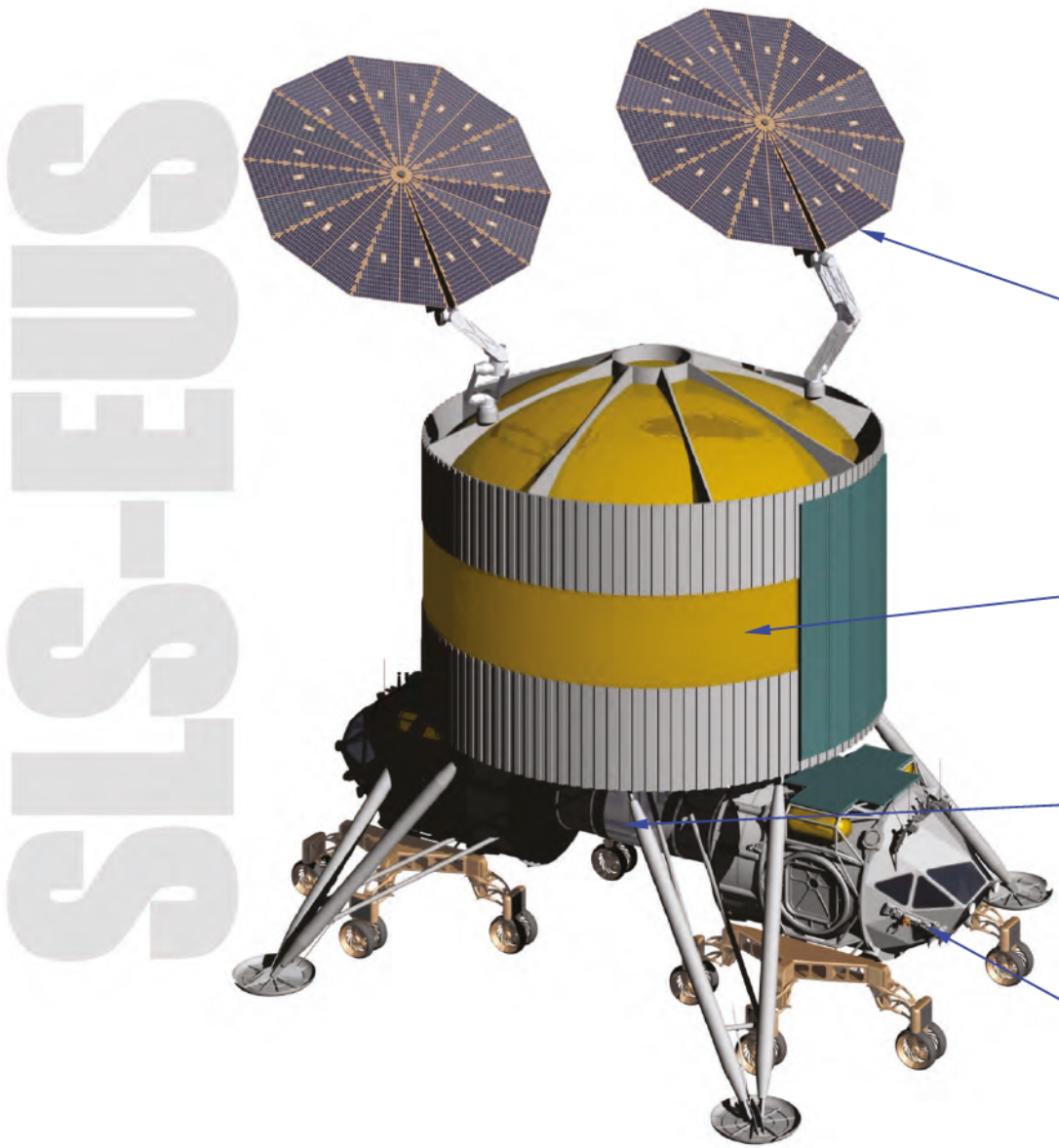


**SLS-EUS Bottom Dock Outpost**

| | |
|---|---|
| Habitable Volume (m3) | 177.0 |
| Non-habitable Volume | 176.0 |
| Pressurized Volume | 353.0 |

| | |
|---|---|
| SLS-EUS Bottom (kg) | 37525.0 |
| Rover | 6809.0 |
| Rover | 6809.0 |
| Total Mass | 51143.0 |

**"Stay alive" power as needed until habitat is connected to power system (not part of study)**

**SLS hydrogen tank derived habitat adaptable to 500 day and 500+500 day missions**

**Underslung airlock**

**PEV rovers**

# SLS-EUS Side-dock Outpost

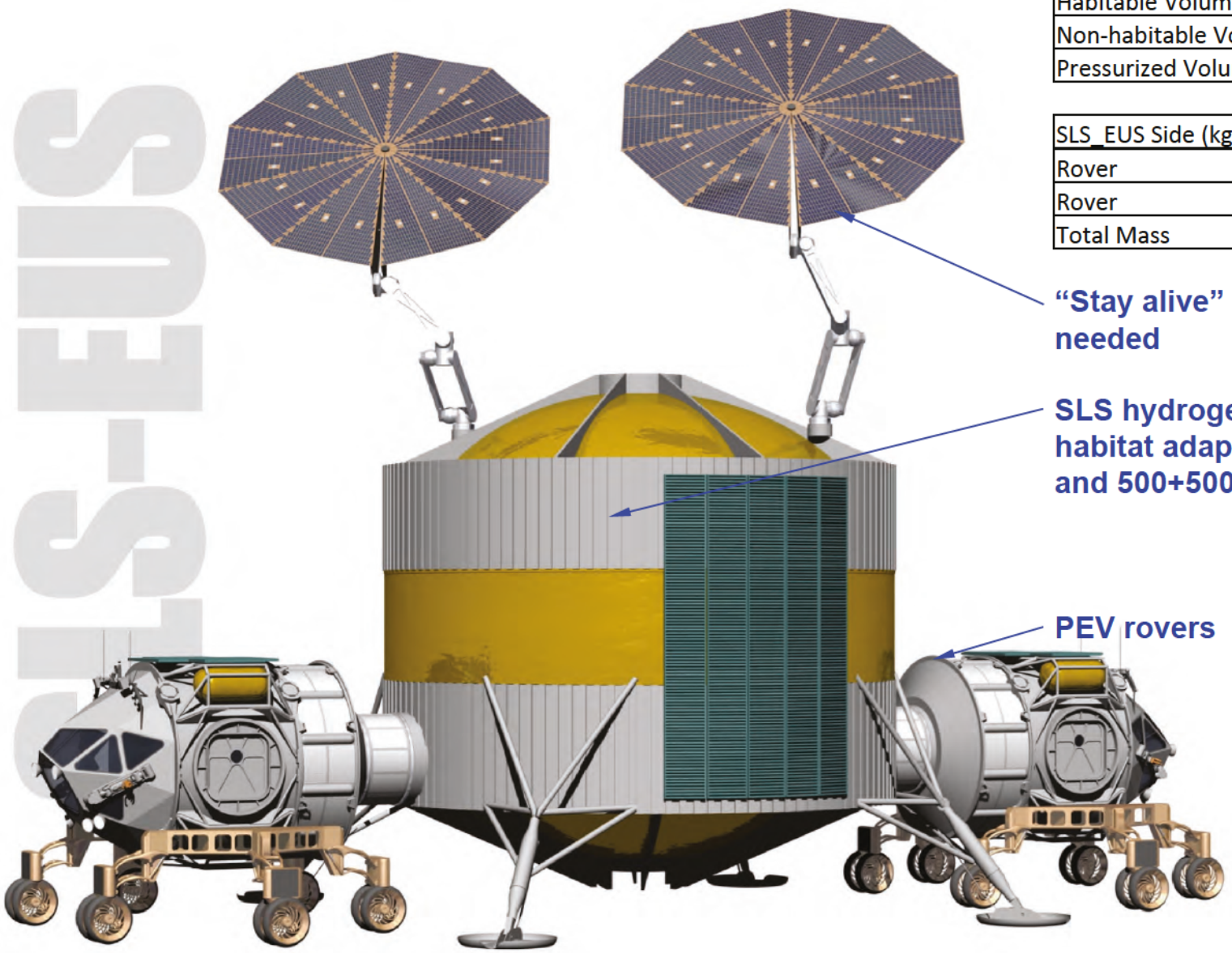


**SLS-EUS Side Dock Outpost**

| | |
|---|---|
| Habitable Volume (m3) | 167.0 |
| Non-habitable Volume | 176.0 |
| Pressurized Volume | 343.0 |

| | |
|---|---|
| SLS_EUS Side (kg) | 35966.0 |
| Rover | 6492.0 |
| Rover | 6492.0 |
| Total Mass | 48950.0 |

**"Stay alive" power as needed**

**SLS hydrogen tank derived habitat adaptable to 500 day and 500+500 day missions**

**PEV rovers**

# Small-diameter Modular Horizontal Habitability

- **Assumptions:**
  - Assume only small-diameter 3m pressure vessel for every habitable cabin, both habitats and vehicles
  - Structures masses calculated from Dorsey, et al (2008)*
  - Design constraints / parameters and subsystem masses taken from Matt Simon's Monolithic baseline studies
  - Modular pressure vessel components will be assembled on Earth in factory
  - This is a preliminary study – elements are shown in table

| element target parameters (from Matt Simon) | | | | | | modular actual resulting volumes (m3) | | | | | | |
|---|---|---|---|---|---|---|---|---|---|---|---|---|
| config | description | crew | hab vol (m3) | non-hab vol (m3) | total vol (m3) | packed vol (m3) | packed dia (m) | single packed (est) L (m) | hab vol (m3) | non-hab vol (m3) | total deployed vol (m3) | total structures mass |
| | STAR Node | 2 | 6.5 | 5.5 | 12 | | | | | | | |
| A | single module | | | | | 14.1 | 3 | 2.0 | 8.1 | 6.0 | 14.1 | 616.0 |
| | *Core Node* | 4 | *32.0* | *20.8* | *52.8* | | | | | | | |
| B | single module | | | | | 45.9 | 3 | 7.0 | 20.4 | 25.5 | 45.9 | 1344.3 |
| | 500 day | 4 | 68.6 | 79.6 | 148.2 | | | | | | | |
| C | single module | | | | | 151.9 | 3 | 22.0 | 72.2 | 79.7 | 151.9 | 2862.1 |
| D | multimodule | | | | | 151.8 | 3 | 7.7 | 71.3 | 80.5 | 151.8 | 4279.7 |
| E | midex | | | | | 117.9 | 3 | 6.1 | 84.7 | 81.3 | 166.0 | 4139.6 |
| F | hybrid-inflatable | | | | | 91.8 | 3 | 7.0 | 128.6 | 57.8 | 186.4 | 3614.1 |
| | 500 + 500 | 4 | 68.6 | 123 | 191.6 | | | | | | | |
| G | single module | | | | | 201.4 | 3 | 29.0 | 78.2 | 123.2 | 201.4 | 3471.3 |
| H | multimodule | | | | | 201.3 | 3 | 10.0 | 81.1 | 120.2 | 201.3 | 4952.4 |
| I | midex | | | | | 122.9 | 3 | 9.2 | 98.4 | 120.6 | 219.0 | 3817.5 |
| J | hybrid-inflatable | | | | | 127.1 | 3 | 9.5 | 139.6 | 82.2 | 221.8 | 4040.2 |
| | 300 + 300 | 4 | 68.6 | 86.5 | 155.1 | | | | | | | |
| K | single module | | | | | 159.0 | 3 | 23.0 | 72.5 | 86.5 | 159.0 | 2921.9 |
| L | multimodule | | | | | 158.9 | 3 | 8.0 | 71.7 | 87.2 | 158.9 | 4403.0 |
| M | midex | | | | | 90.4 | 3 | 6.9 | 76.3 | 86.2 | 162.5 | 3214.8 |
| N | hybrid-inflatable | | | | | 91.8 | 3 | 7.0 | 136.1 | 50.3 | 186.4 | 3614.1 |
| | 190 + 190 | 2 | 68.6 | 67.4 | 136 | | | | | | | |
| O | single module | | | | | 137.8 | 3 | 20.0 | 69.7 | 68.1 | 137.8 | 2129.7 |
| P | multimodule | | | | | 137.7 | 3 | 7.0 | 68.8 | 68.9 | 137.7 | 4033.0 |
| Q | midex | | | | | 76.3 | 3 | 5.9 | 72.4 | 68.9 | 141.3 | 3004.4 |
| R | hybrid-inflatable | | | | | 84.7 | 3 | 6.5 | 126.4 | 52.9 | 179.4 | 3490.8 |
| | MAV cabin | 2 | 10.13 | 1.87 | 12 | | | | | | | |
| S | large (4 crew) | | | | | 17.6 | 3 | 3.0 | 13.5 | 4.1 | 17.6 | 319.9 |
| T | minimal (2 cr) | | | | | 10.6 | 3 | 2.0 | 7.6 | 3.0 | 10.6 | 260.1 |
| | rover cabin | 2 | 6.5 | 5.5 | 12 | | | | | | | |
| U | STAR node | | | | | 20.7 | 3 | 4.2 | 14.7 | 6.0 | 20.7 | 940.3 |
| V | deployable EVA | | | | | 22.9 | 3 | 4.5 | 21.8 | 6.0 | 27.8 | 1031.2 |

*Dorsey; Wu; Smith (2008). Structural Definition and Mass Estimation of Lunar Habitats for the Lunar Architecture Team Phase 2 (LAT-2) Study. Note: structures were calculated based on 1-g Earth analog loads, so difference of Mars and Lunar gravities are not considered significant.

# Modular Horizontal Core Hab / STAR Node concept

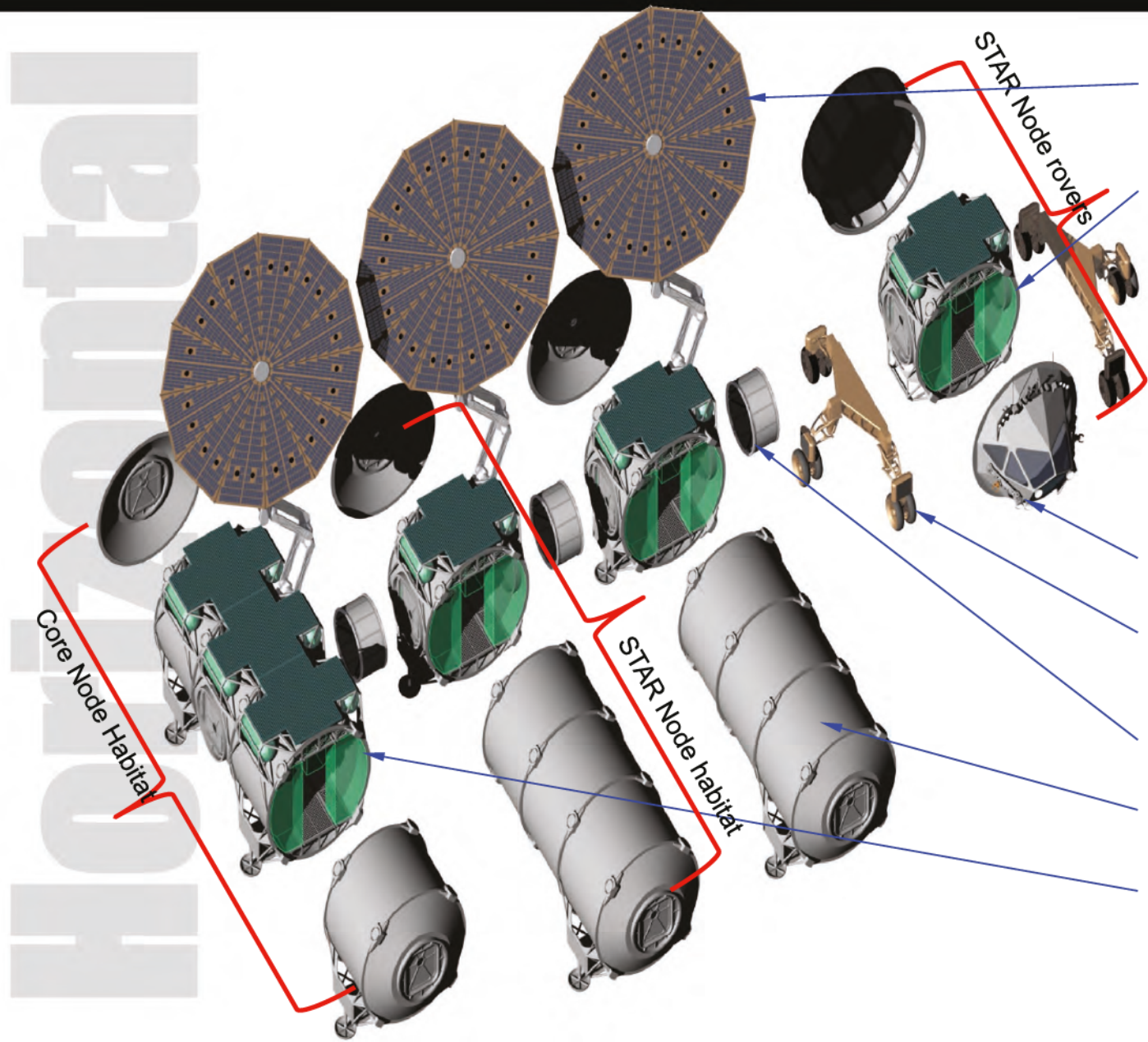


- Solar arrays optional each STAR Node
- Space Technology & Advanced Readiness (STAR) Node (open loop ECLSS, air ventilation, fire suppressant, thermal, limited PMAD): STAR Node is central open loop ECLSS module for rovers as well
- Cockpits or end cones
- Modular mobility systems
- Active-active adapter
- Additional volume
- Core Hab (closed ECLSS, air / water revitalization, thermal, PMAD, avionics)

# Phobos / Mars-forward Adaptable

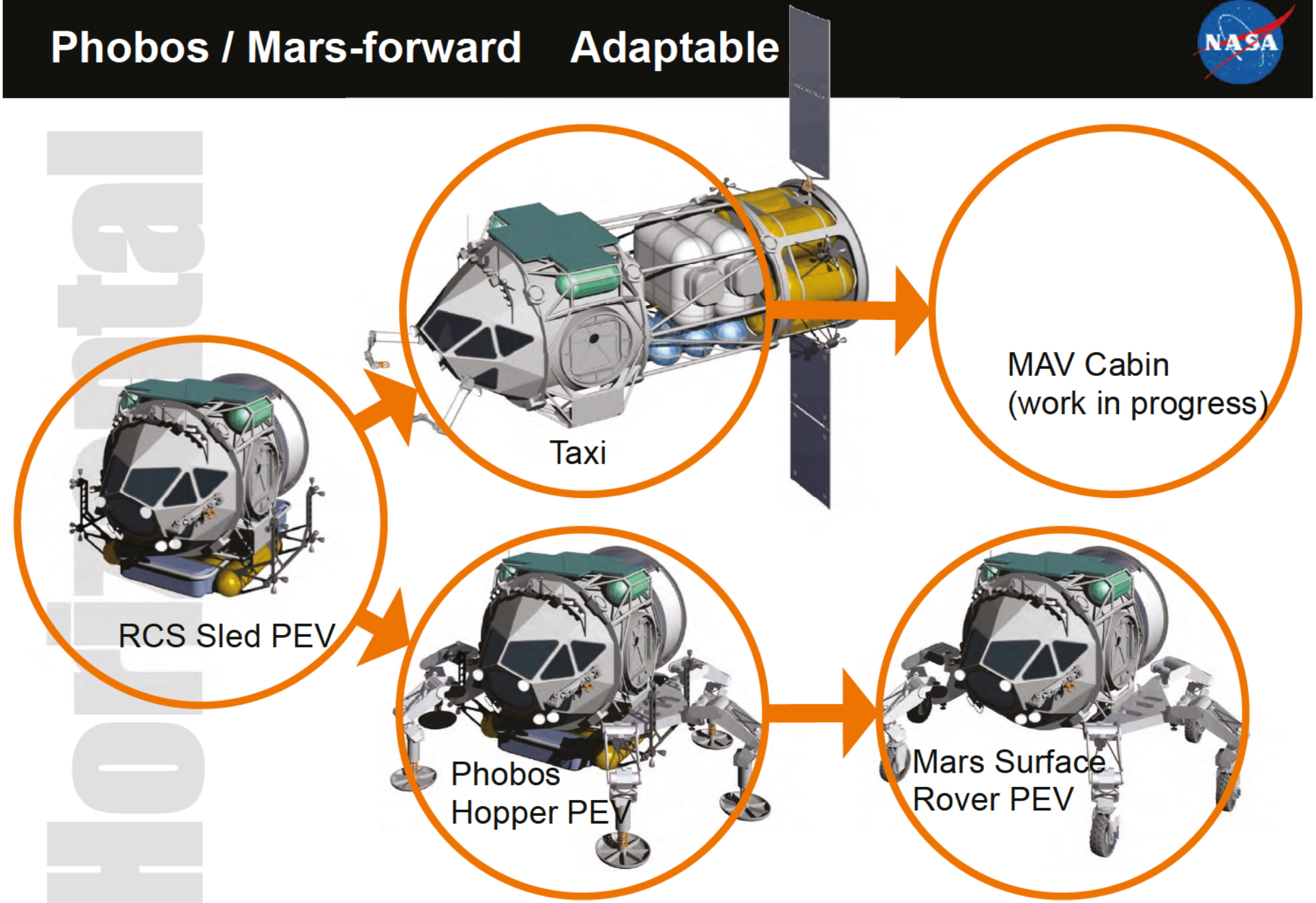

# Modular Horizontal Outpost

**Modular Horizontal Midex Outpost**

| | |
|---|---|
| Habitable Volume (m3) | 121.8 |
| Non-habitable Volume | 78.7 |
| Pressurized Volume | 200.5 |

| | |
|---|---|
| Core Hab Module (kg) | 9827.0 |
| Midex Module | 11280.0 |
| Midex Module | 11280.0 |
| Rover | 6809.0 |
| Rover | 6809.0 |
| Inflatable Airlock | 3464.0 |
| Total Mass | 49469.0 |

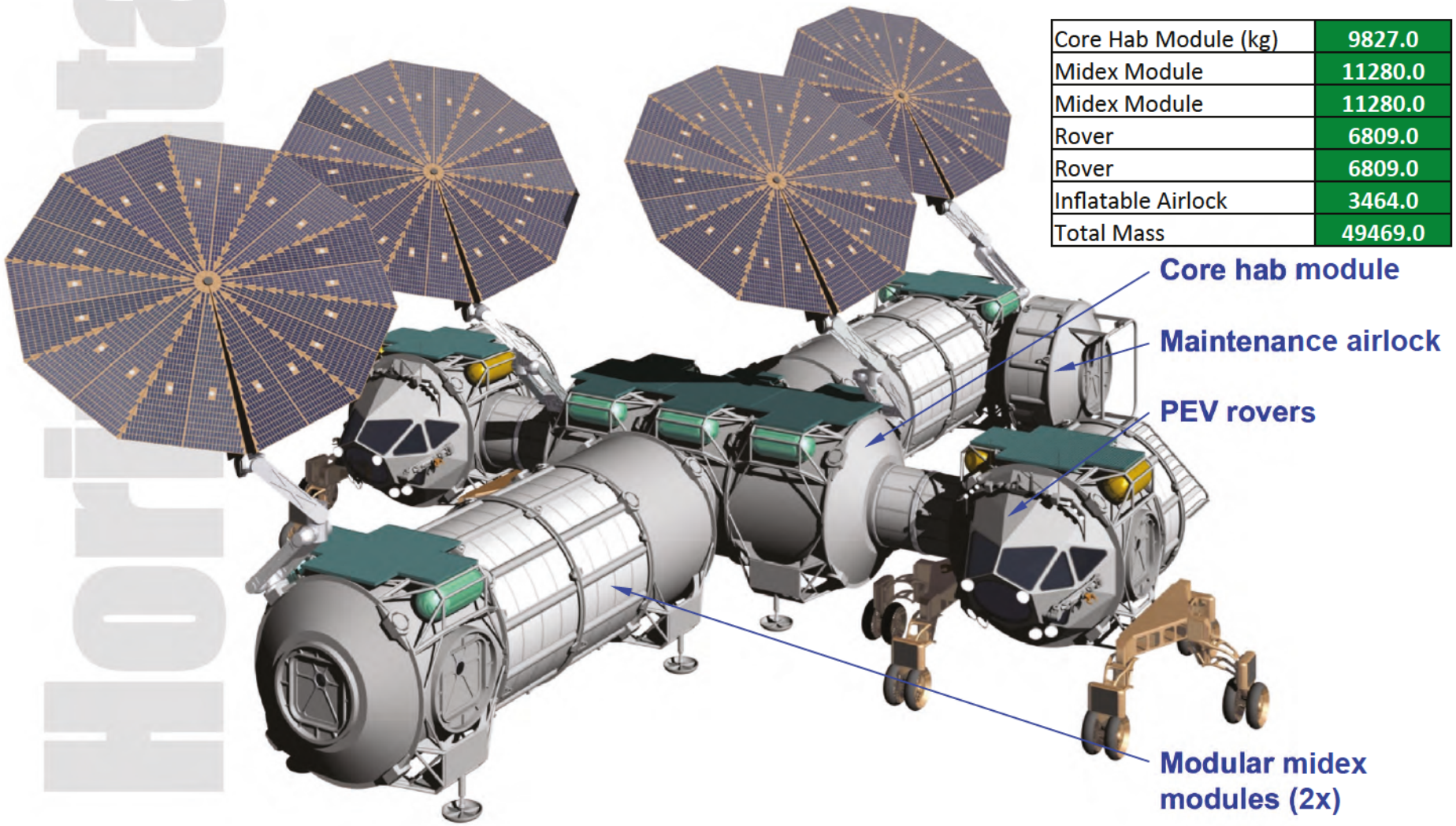

# Core Habitat: Phobos Concepts

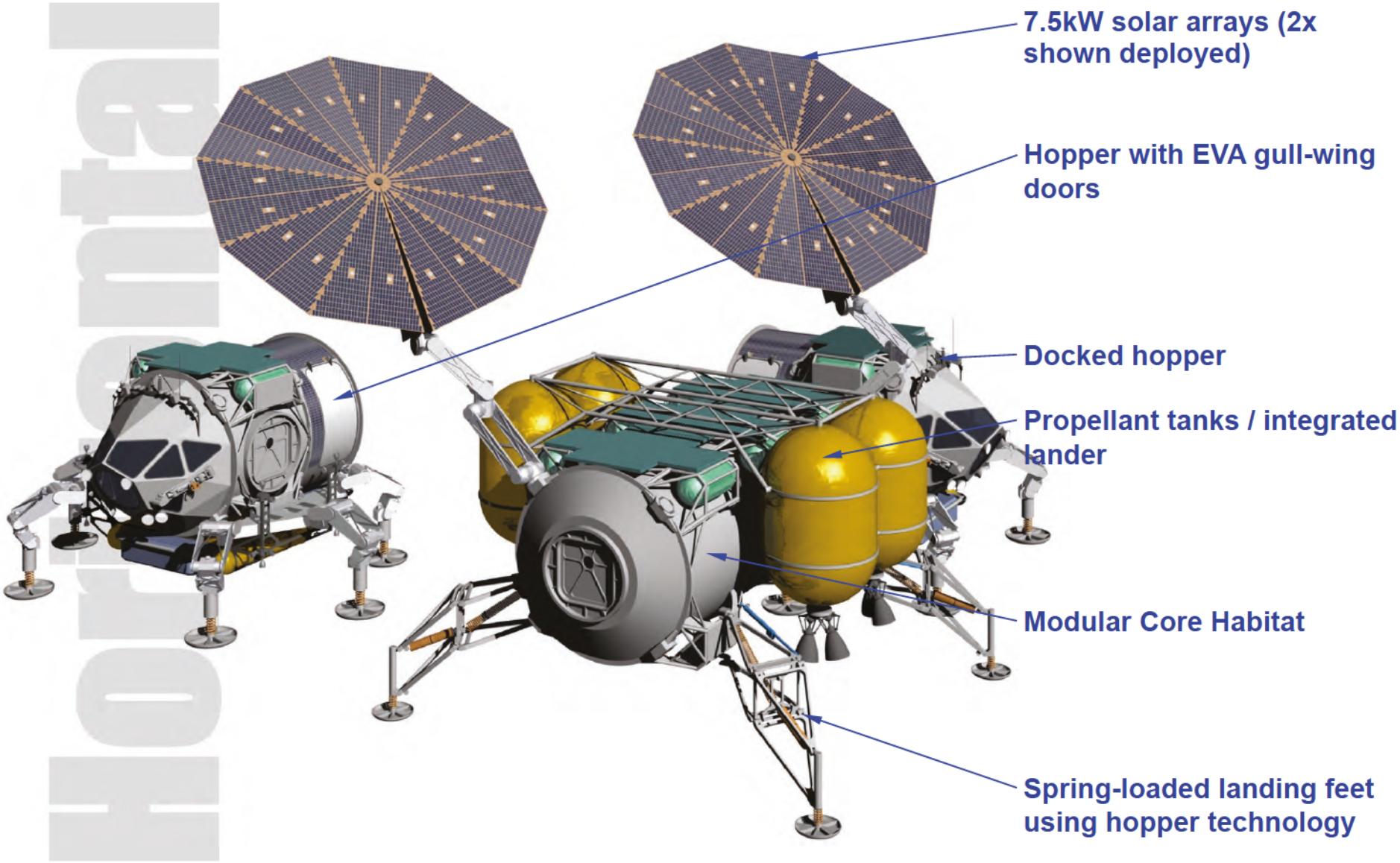

# Mars Surface Habitability Conclusions

- Habitats can be monolithic or broken up into small modular units if required
- Multiple pressure vessel types will need to be developed, but commonality is possible – small common cabin can be used for rovers, taxi, logistics, and MAV
- Small cabin habitats are possible, but larger volume means many small units that need to be docked together
- Monolithic modules reduce risk for docking but require a large lander to deliver
- Multiple modules have risk for docking and transportation, but can use smaller landers
- Inflatable volume can extend habitable volume of hard-can habitats
- Surface habitats and rovers have special needs for docking together that compensate for variable terrain – a flexible adapter
- Recommended: converge on two sizes of pressure shells (small cabin and larger habitat) for all architecture elements, but ultimately lander size will govern

# THANK YOU

A. Scott Howe, PhD <a.scott.howe@jpl.nasa.gov>
Jet Propulsion Laboratory, California Institute of Technology
Copyright 2015 all rights reserved