National Aeronautics and Space Administration

RADIOISOTOPE POWER SYSTEMS

Enabling Future Low-cost Small Mission Concepts

Young Lee, Brian Bairstow, Rashied Amini - NASA JPL/Caltech
and
June Zakrajsek, Steven Oleson, Robert Cataldo - NASA GRC

Space Ops 2014, Pasadena, CA May 5-9, 2014

POWER TO EXPLORE

rps.nasa.gov

Copyright 2014. All rights reserved.

RPS Program Office

The RPS Program directly responds to Agency Goal 2 from the 2011 Strategic Plan: “Expand scientific understanding of the Earth and the universe in which we live.”

- Specifically, Sub-Goal 2c states: “Ascertain the content, origin, and evolution of the solar system and the potential for life elsewhere.”
- The Solar System Exploration Roadmap further supports the need for Radioisotope Power Systems Recommends the assurance of the availability of RPS for the exploration of the solar system
- One of the major roles of the RPS Program is to identify new RPS requirements and plan product improvements and new system developments to support competed, PI-led missions

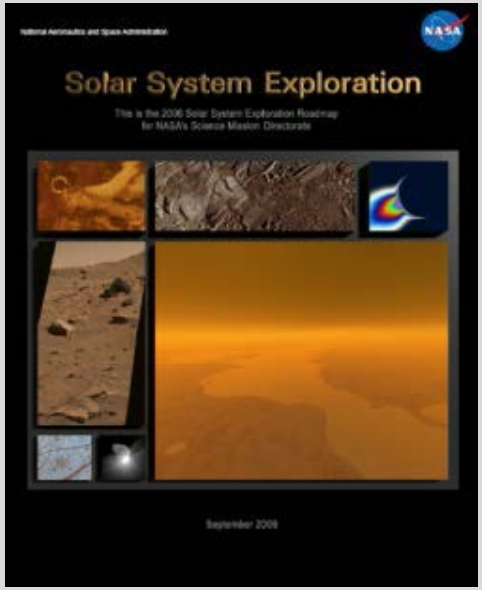

RPS Mission Analysis Team

- The MA Team supports RPS Program by identifying needed RPS systems and related products that will be responsive to anticipated science requirements and potential mission timelines. The MA Team:
  - Leads/coordinates a variety of mission studies that support the advocacy of new RPS for future missions – this supports the Program in preserving the long-term vision of RPS for solar system exploration.
  - Identifies, designs, coordinates, directs, and conducts mission studies to explore the trades and issues related to implementation of the range of RPS Product Line options for future missions.
  - Plans, designs, and conducts studies at multiple centers (JPL, GRC and APL) to maximize the technical and cost benefit by using the unique skills and capabilities at each location.
  - Documents study results annually in a technology recommendations report.

RPS Powered Missions: Past and Current

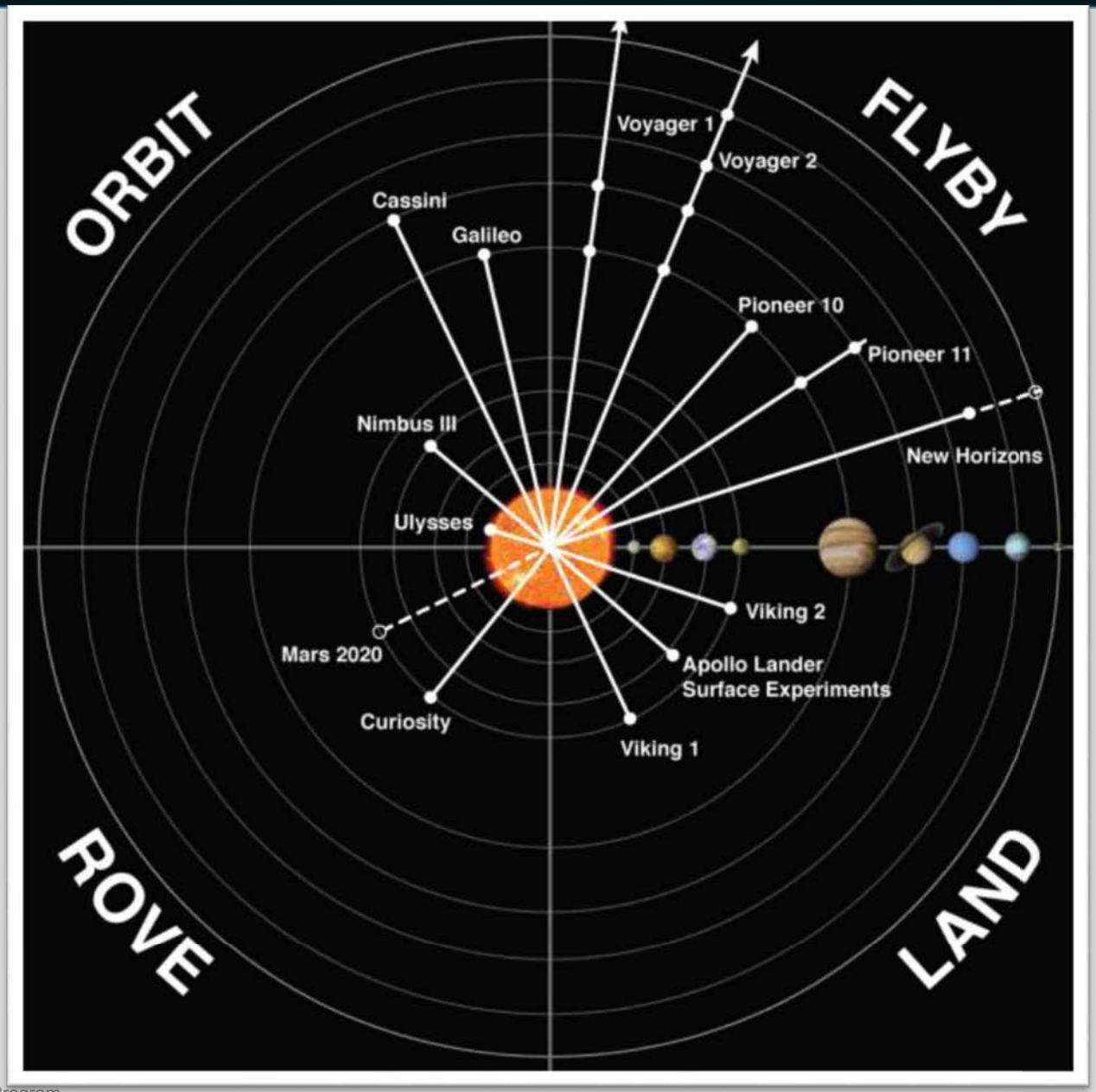

MA Mission Study Process

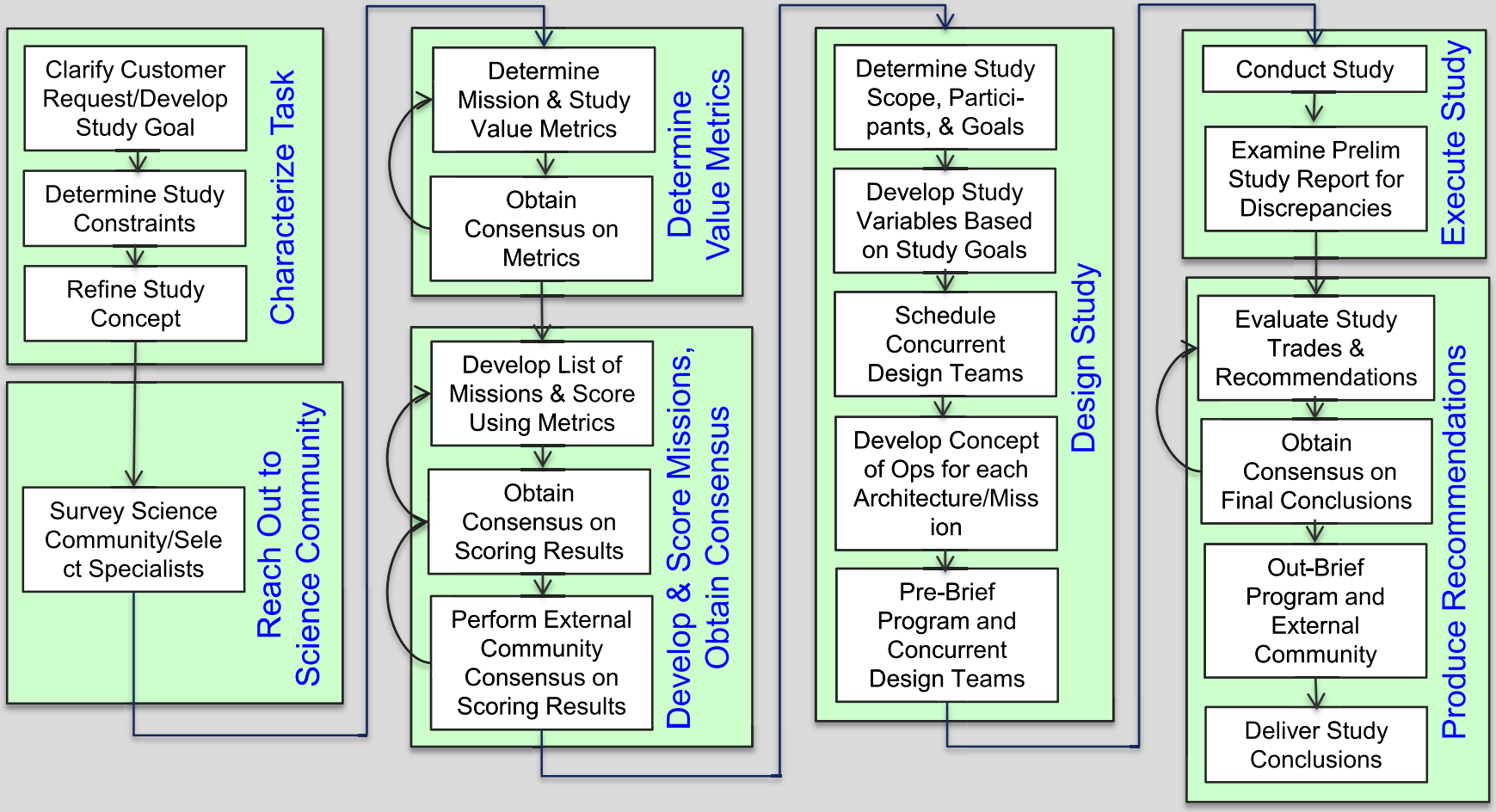

To ensure active involvement from the science and RPS product user communities and proactively inform status of mission studies to stakeholders and interested parties

Why Low-Cost Small Mission Concepts?

- Considering NASA's increasingly constrained budgets, scientists and mission designers are exploring ways to develop effective, affordable planetary missions
  - Implementable at a fixed cost that includes spacecraft and science payload development, launch, operations, science data analysis and all relevant mission-specific technology development.
  - Low-cost, low-mass, and long-lived applications are being examined as a part of a wider study of standalone, piggy-backed, and landed missions that may not be feasible with available power options

- There are potential mission applications for small (10-100 W scale) RPS and very small (milliwatt scale) RPS for low-cost low-mass missions with:
  - Long mission durations and deep space destinations, particularly outer planet missions
  - Stricter mass and volume constraints
  - Lower power requirements

- Recently, a pair of mission concepts were studied by the RPS Program Mission Analysis Team to explore mission need for low scale power options and determine optimal qualities of small and very small RPS.

- This talk focuses on the studied mission concept using small RPS.

Small RPS Mission Concept Study Team

- RPS Mission Analysis Team worked with COMPASS Team, JPL and APL to plan the studies and select the mission concepts for study
  - JPL team explored mission concepts for study, study goals, notional RPS characteristics, and participated in study
  - Collaborative Modeling for Parametric Assessment of Space Systems (COMPASS) Analysis Team at GRC, is a design team similar to JPL's Team X or A Team, and ran the studies.
  - APL provided science expertise for the studies

Study Questions

- Can Discovery-class science and a Discovery-class cost profile using multiple SmallSats, with mission duration of up to 14 years, be enabled by small RPS?
- Can mission concepts ‘close’ with one General Purpose Heat Source (GPHS) module?
- What are the mission drivers for small RPS-enabled mission power needs? Number of spacecraft? Number of instruments? Or number of objects to fly by?
- What are the mission concept parameters that are key trade attributes when using small RPS in a Discovery-class mission?
- What are the optimal qualities of small RPS that could meet the needs of small RPS-enabled missions?

Small RPS Concepts

- Small RPS: General Purpose Heat Source (GPHS) based RPS producing power in the 10-100 W_e range
  - Small RTG: GPHS-based Small Radioisotope Thermal Generator
  - Small SRG: GPHS-based Small Stirling Radioisotope Generator

General Purpose Heat Source (GPHS) Components

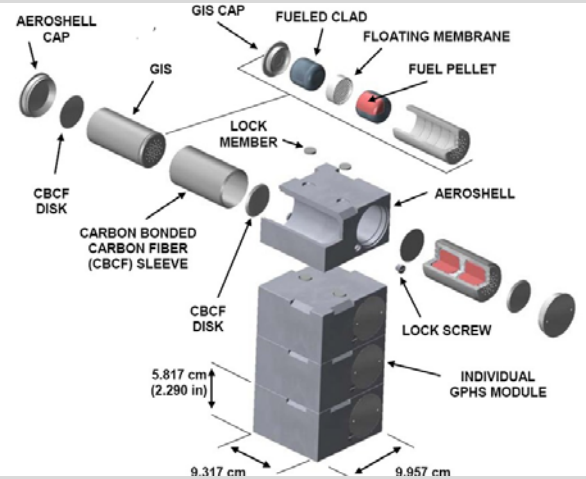

Small RTG

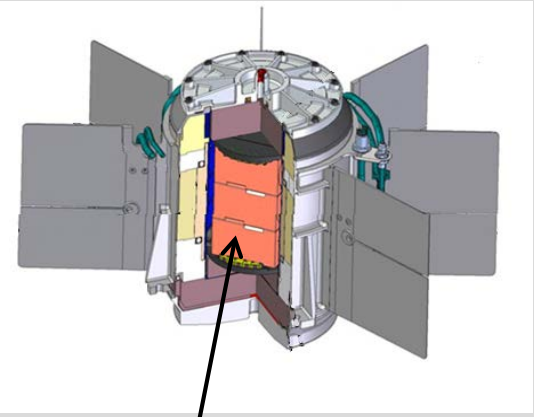

3 GPHS Modules

Small SRG

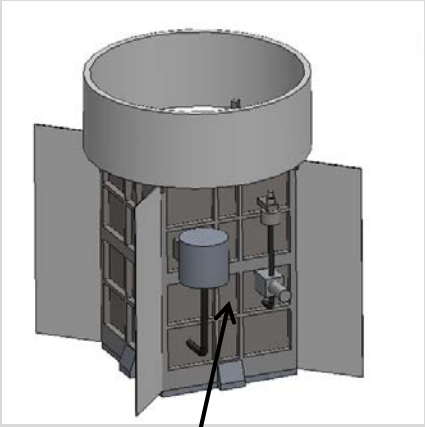

1 GPHS Module (inside)

Pre-Decisional Information -- For Planning and Discussion Purposes Only

Representative Small RPS Attributes

Parameter	1-GPHS Small SRG	1-GPHS Small RTG	3-GPHS Small RTG
BOL Power	65 W	21 W	64 W
EOM Power (12 year mission)	57 W	16 W	48 W
Mass	18 kg	10 kg	20 kg
Dimensions	49 x 39 x 38 cm	64 cm dia (inc fins) 17 cm hgt	64 cm dia (inc fins) 31 cm hgt
Cold-side Temp (BOM, 4K sink)	38 C	50 C	50 C
Voltage	28 +/- 6 V	5 +/- 1 V	28 +/- 8 V
Degradation	1.16 %/year	2.5 %/year	2.5 %/year
Efficiency (BOM)	26%	8.5%	8.5%

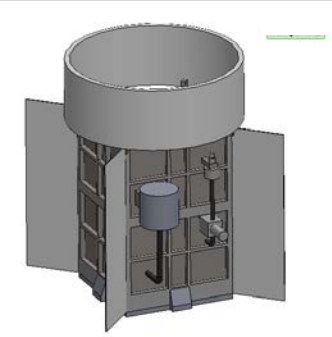

Small Stirling Radioisotope Generator

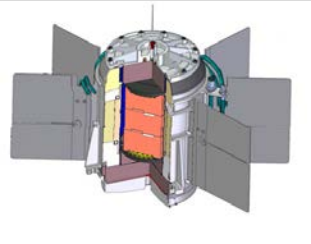

3-GPHS Small Radioisotope Thermoelectric Generator

- BOM values are at Beginning of Mission: at launch after 3 years in storage. EOM values are at End of Mission after an additional 12 years of operations.
- Small SRG: One Advanced Stirling radioisotope generator (ASRG) engine with a passive balancer and a two-card controller. The controller is included in the mass above, but not in the volume or diagram. Attributes are based on ASRG current best estimate.
- Small RTG: Follows Multi-Mission Radioisotope Thermoelectric Generator (MMRTG) design but with 1 or 3 GPHS modules and advanced PbTe/TAGS/BiTe thermocouples. Estimated 6 parallel strings for average 28 V power. Attributes are estimated requirements.
- Systems assumed qualified for 17-year lifetime, including 3 years of storage.

Centaur Flyby Mission Concept

- Send ~4 similar or identical SmallSats (of about 100-200 kg) to at least two different Centaur objects, focusing primarily on 2060 Chiron.
  - A representative science mission which should remain relevant at a point when small RPS would become available
  - A breadth of architectures with varying mission parameters.
- Why Centaur objects?
  - Difficult to observe remotely due to distance and albedo.
  - Previously unexplored
  - Appropriate fly-by target
  - Exhibit diverse spectra
  - May be related to the Kuiper-Belt Objects (KBO) but are significantly more accessible
  - New Frontiers 2009 AO recommended Centaur reconnaissance mission
- Why 2060 Chiron?
  - One of several unique Centaurs with detected coma activity
    - Indicating it was perturbed from an orbit at a larger heliocentric distance.
    - Possibly KBO
  - Large Centaur object with ephemeris reasonably well known
- Andy Rivkin from APL provided science expertise

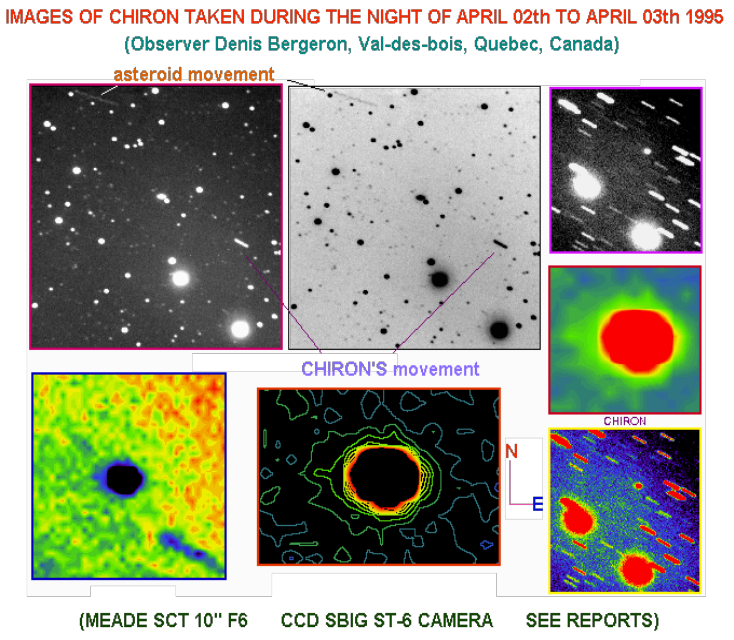

Study Constraints and Assumptions

- Study constraints were:
  - Stand-alone spacecraft enabled by small RPS
  - Low cost mission as a Discovery class cost profile with multiple SmallSats
  - Use of 1 GPHS module
  - Mission duration to be up to 14 years
  - Data return phase up to 1 year
  - Launch date to be after 2020
- Study assumptions were:
  - Availability of small RPS to be within 7 years from today
  - 4 spacecraft each in 100 kg range
  - Same spacecraft configurations with same science instruments
  - All spacecraft could be launched on the same launch vehicle
  - Use of small, 20-60 W_e, radioisotope power to supply a reasonable power level for timely data return while batteries supply additional power during science operations and data return communications periods
  - Secondary science instrument contributed
  - Small RPS systems assumed to be Government Furnished Equipment (GFE)

Mission Scenarios

- Baseline Mission Scenario for Study
  - Four identical SmallSats targeting two Centaur objects (two SmallSats to each object)
    - Redundant spacecraft
    - More angles for observations
    - More time on target
    - Better gravity science
- Other Considered Mission Scenarios
  - Four identical SmallSats targeting four Centaur objects (one SmallSat to each object)
    - Difficult with a single launch in a 2020-2022 launch window
  - Four SmallSats with two different payloads targeting two Centaur objects (one SmallSat of each payload to each object)
  - Four SmallSats with four different payloads targeting one Centaur object

Specific Science Goals

- Characterize Chiron: surface morphology, structure, and composition
  - Surface Morphology determined via camera
    - Maps of target and flyby closest approach images
      - Based on MESSENGER MDIS NAC heritage
      - 2048 x 2048 pixel, 1.5º FOV
      - 2.4 kg, 5 W

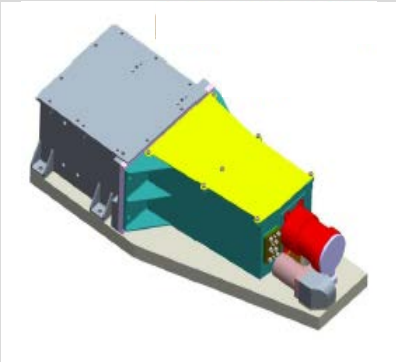

  - Structure determined via gravity science with two-way Doppler radio
    - 2-way ranging through medium gain antenna to/from DSN
  - Composition determined via hyperspectral IR spectrometer (Contributed instrument)
    - Maps of target and flyby closest approach images
      - Based on Marco Polo VIS-IR heritage
      - 128 pixel pushbroom with 10 spectral bands, 0.014º FOV
      - 4 kg, 12.5 W

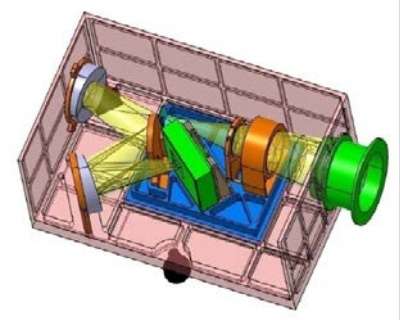

Science Operations Concept

- Science measurements could begin when target could be resolved to 5 pixels
- Initial Science Observation would begin 1 week before closest flyby
  - OPNAV Observation by S/C (with camera) to better determine target ephemeris and rotation properties
  - @ 5km/s camera could resolve target ~ 1 week before flyby, spectrometer ~1 day before
  - Mapping: Image every ½ hr (30º rotation of object), 50 Mb per image uncompressed
- Flyby Observation (starting at 4 hrs before closest approach ~800 km)
  - Simultaneously run NAC/Spectrometer and 2-way Doppler
  - Spectrometer and NAC closest approach imaging from T-30m to T+30m
  - DSN Track from T-4 h to T+4h (2-way ranging thru MGA to/from DSN. 12 dBHz S/N)
- Post-flyby observation (similar to initial science observation mode from other side)
- Data Return 91 days of one 8 hr pass/day
  - 10,200 Mb uncompressed, 3.4 Gb compressed (3x lossless)

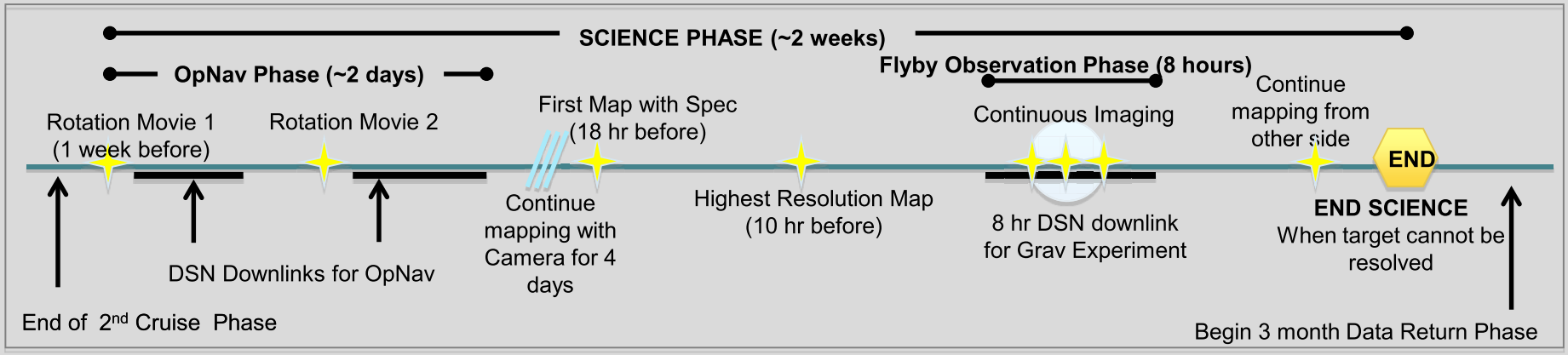

Mission Design Concept

- Trajectory constraints:
  - C3 ~ 100 km^2/s^2
  - Cruise time must be < 13 years
    - Based on spacecraft and RPS lifetime
  - Flyby speed at target body must be ~5 km/s or lower
    - Based on surface mapping science requirements
- Jupiter flyby for gravity assist trajectories were developed
  - **Phase 1 Cruise**: 1.5-2 years depending on Centaur target
  - Jupiter Flyby/Gravity Assist
  - **Phase 2 Cruise**: 8-10 years depending on Centaur target
    - During this phase the spacecraft split to different targets via propulsive burns

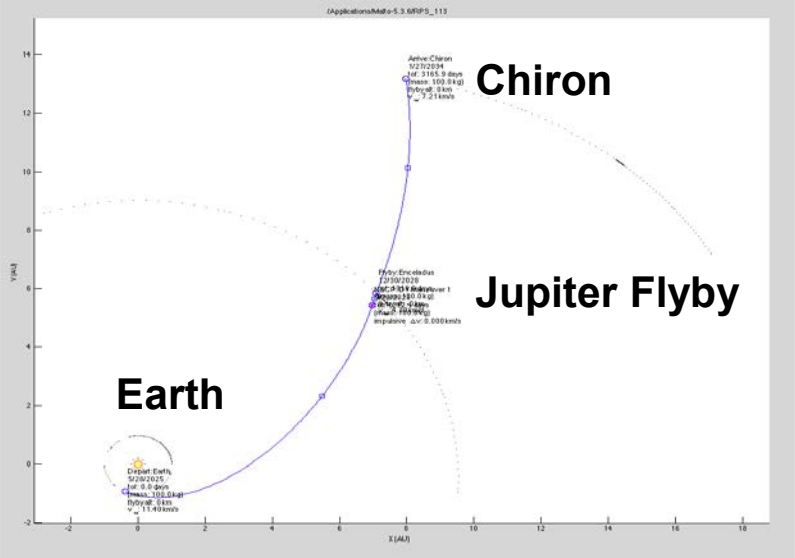

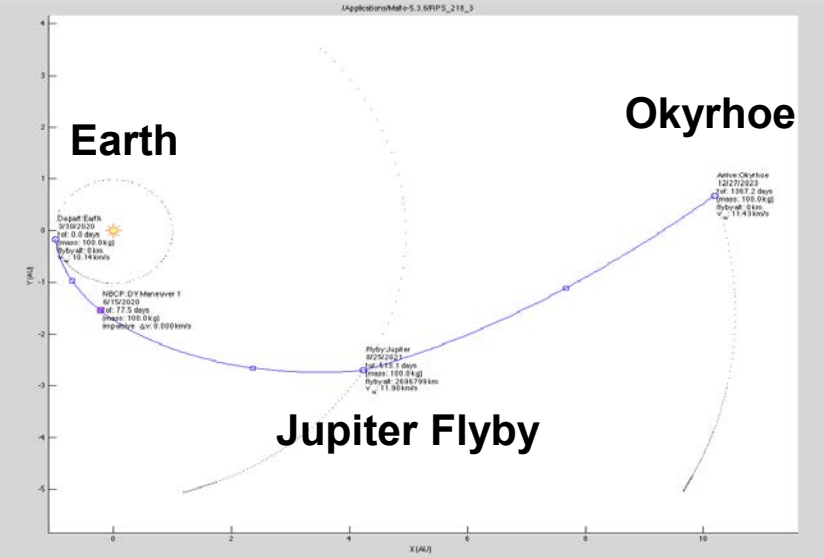

SmallSat and Launch Stack Configuration

Atlas 431 with STAR 48B kick stage

Four identical SmallSats each with radioisotope power system

Conceptual Design

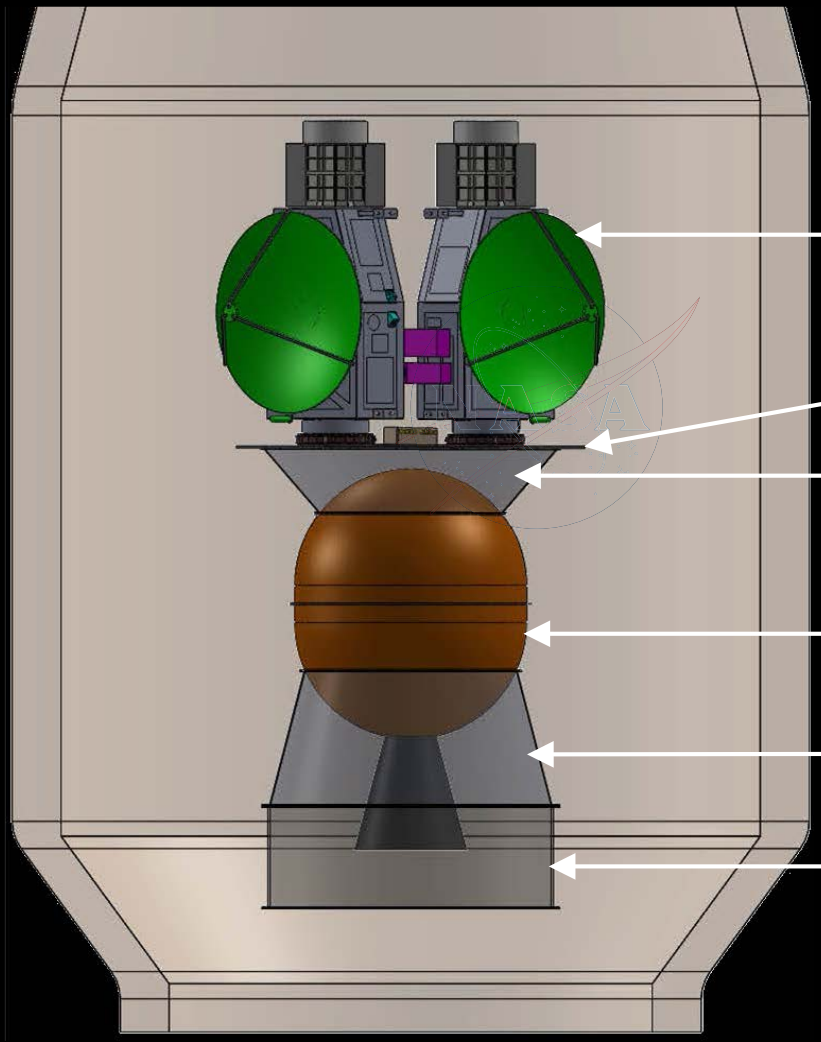

* 3-Axis Stabilization Stage for the Star 48 BV not shown

SmallSat Launch Vehicle Configuration

Conceptual Design

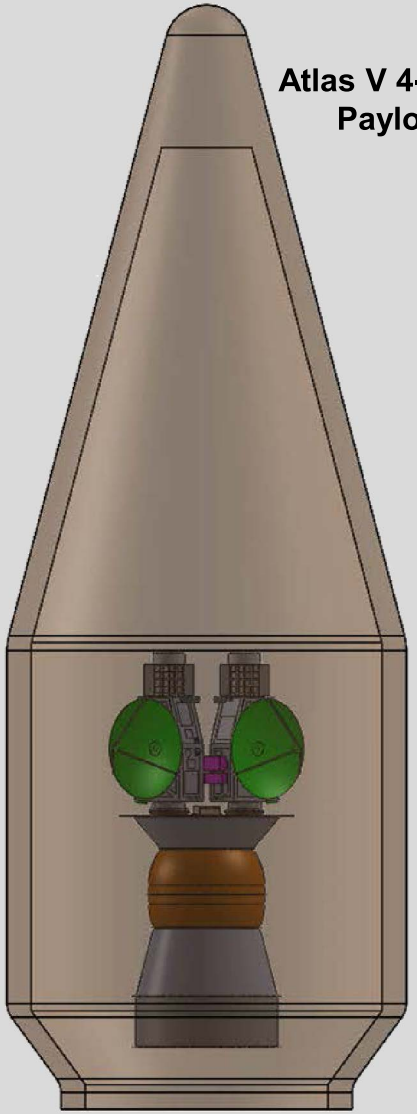

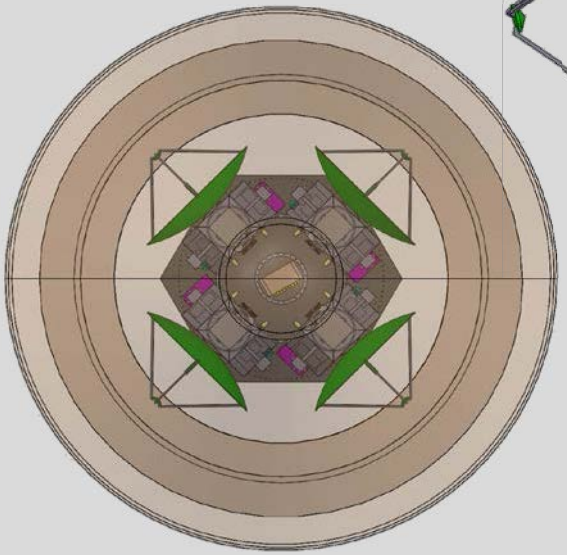

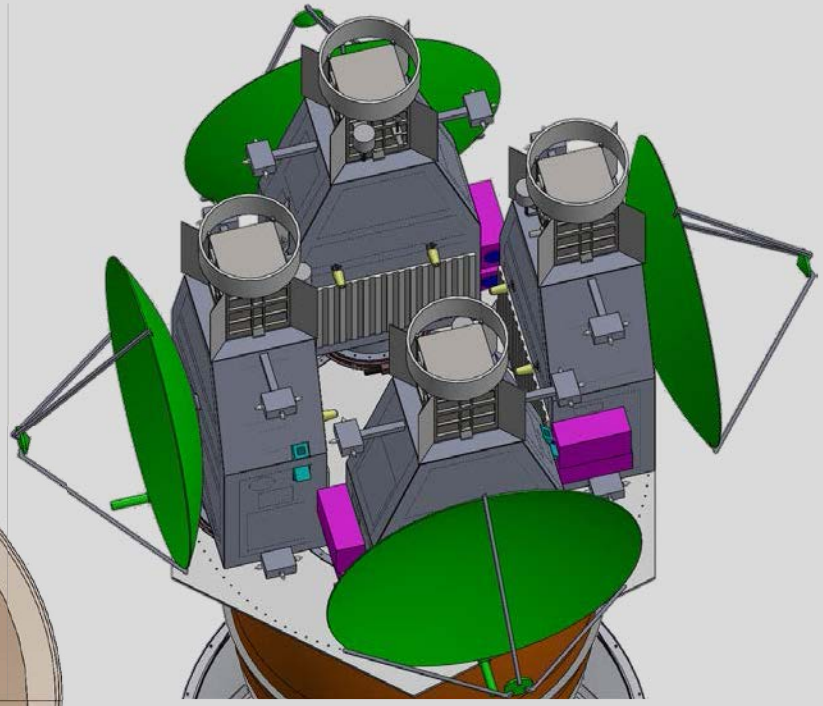

SmallSat Components

Conceptual Design

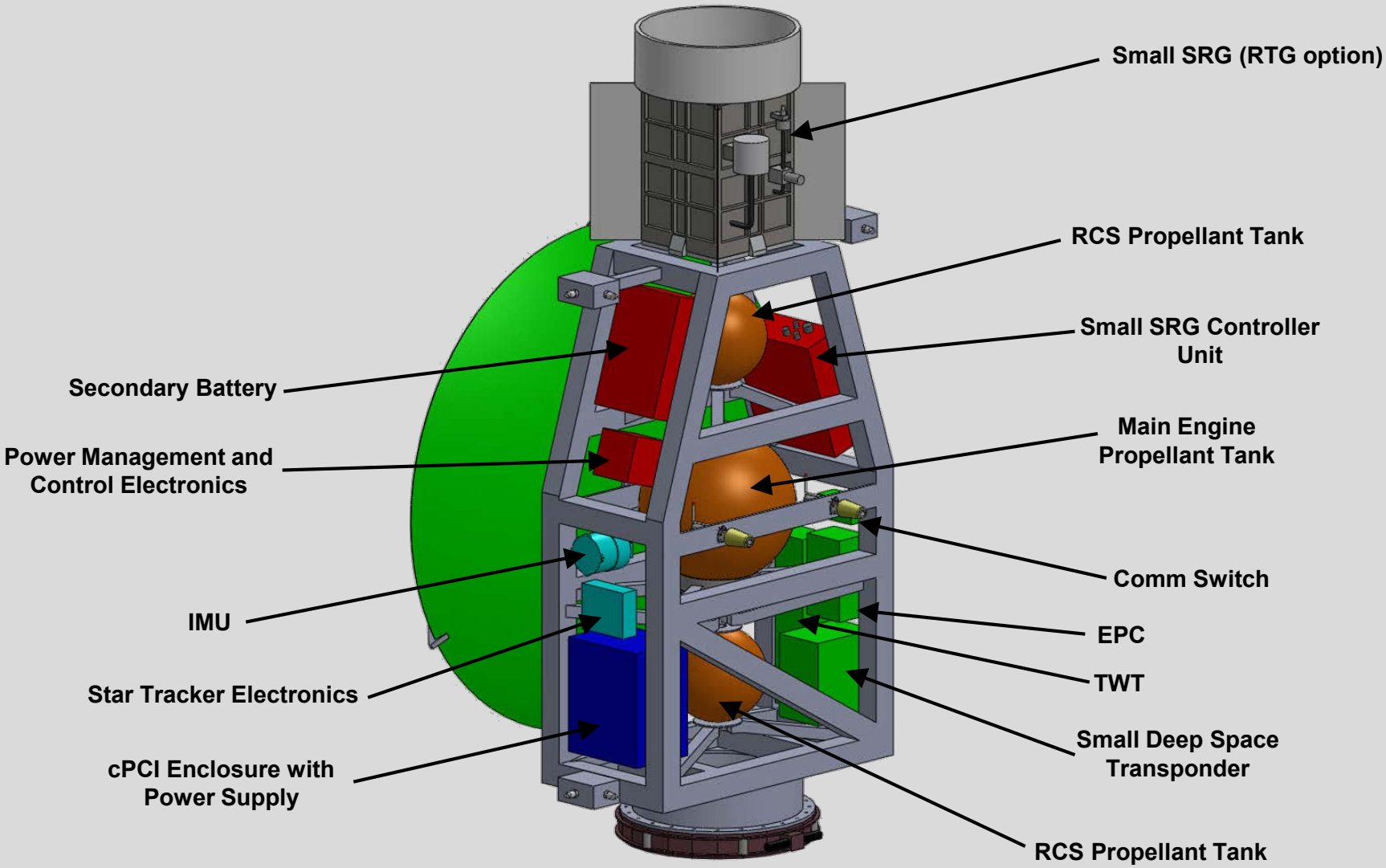

Study Spacecraft MEL (Small SRG case)

SmallSat MEL				
Main Subsystems	Basic Mass (kg)	Growth (kg)	Predicted Mass (kg)	Aggregate Growth (%)
RPS SmallSat	**261.36**	**40.25**	**301.61**	
Microsat Bus	***139.31***	***18.28***	**157.58**	13%
Science Payload	7.40	2.10	**9.50**	28%
Attitude Determination and Control	3.61	0.11	**3.71**	3%
Command & Data Handling	13.80	3.73	**17.53**	27%
Communications and Tracking	10.05	2.48	**12.53**	25%
Electrical Power Subsystem	40.18	6.03	**46.20**	15%
Thermal Control (Non-Propellant)	12.94	1.94	**14.89**	15%
Propulsion (Chemical Hardware)	12.75	0.53	**13.29**	4%
Propellant (Chemical)	**12.73**		**12.73**	0%
Structures and Mechanisms	25.85	1.36	**27.21**	5%
Estimated Spacecraft Dry Mass (no prop,consum)	**126.58**	18.28	**144.85**	**14%**
Estimated Spacecraft Wet Mass	139.31	18.28	157.58	
System Level Growth Calculations				**Total Growth**
Dry Mass Desired System Level Growth	126.58	37.97	**164.55**	**30%**
Additional Growth (carried at system level)		19.69		**16%**
Total Wet Mass with Growth	139.31	37.97	**177.28**	

Mission Concept Highlights

Mission	Four 170 kg RPS powered SmallSats would flyby Jupiter then flyby two Centaur objects (two SmallSats flyby each object). Flybys would occur 4-12 years after launch at 4-10 km/s velocity.
Mission Duration	Up to 14 years
Launcher	Atlas 431 with Star 48BV to C^3 97 km^2/s^2
Science	Narrow Angle Camera, Gravity Science, Spectrometer; 3 Gb of data (~200 10m/pixel resolution images from NAC per spacecraft, ~148 200m/pixel resolution images from the spectrometer per spacecraft, gravity science estimates mass of Centaur to 1% accuracy)
Spacecraft	
Power	~60W provided by RPS, 9.3 kg Li-ion battery.
Communications	~ 1,350 bps data rate with X-band, 1 meter dish
AD&CS	IMU, Sun sensors, Star trackers, N_2 Cold Gas, 3 axis RCS pointing to 0.5 degree accuracy
Propulsion	N_2 cold gas for RCS and Hydrazine for mid-course corrections
C&DH	Microsat class processor (LEON)
Mechanical	Star 48 final burn, pointing mirror for science
Cost	Discovery Class assuming RPS systems are Government Furnished Equipment as in 2010 Discovery Announcement of Opportunity

Mission Phased Power Requirements

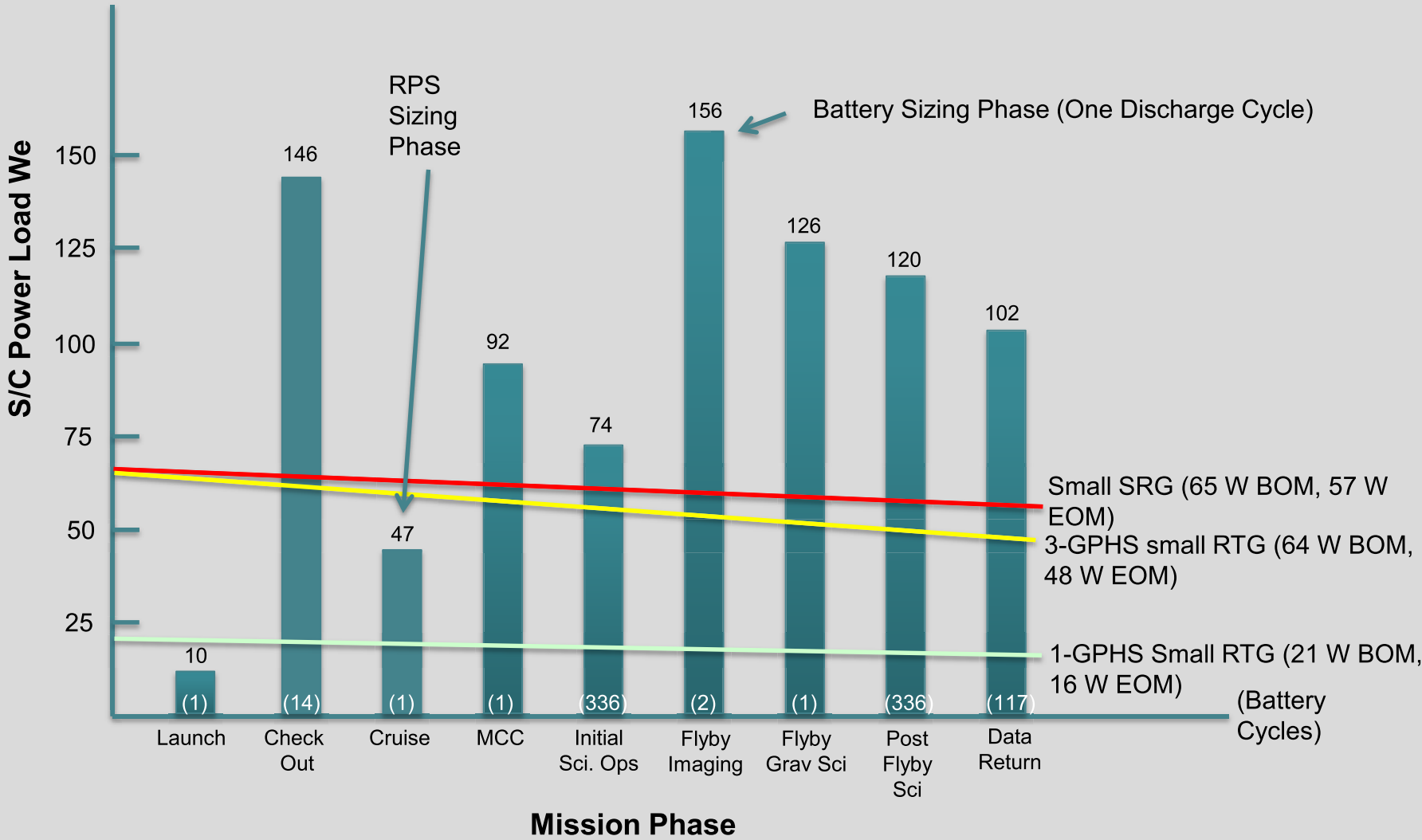

Study Findings: Power System

- Power Systems Requirements
  - Batteries cannot supplement RPS for 10-12 years of cruise
  - There must be a power mode for recharging secondary batteries
- During the study, it became apparent that the driving power case is the cruise/hibernation mission phase.
  - Requires ~40 W with science instruments off and C&DH in a low-power mode
  - Also to supply sufficient battery recharge rates for data return duration
- High power mission phases do not drive RPS power level
  - Use supplemental power from the 9kg Li-ion battery during shorter telecom and science operations modes
- The mission was initially studied with a single 1-GPHS small RTG producing 16 W EOM
  - This case could not get power usage low enough to recharge even after turning off the IMU and further reducing the C&DH power.
  - To be feasible with a 1-GPHS small RTG, the mission would need to take on more risk by turning off the star tracker, computer, and/or receiver, or by using lower-power components.
  - The 3-GPHS small RTG configuration met the mission's power requirements.

Study Conclusions

- A SmallSat using a small Radioisotope Power System for deep space destinations could potentially fit into a Discovery class mission cost cap and perform significant science with a timely return of data.
  - Only applicable when the Discovery 12 guidelines were applied
  - Commonality of hardware and science instruments among identical spacecraft enabled to meet the Discovery Class mission cost cap
  - Multiple spacecraft shared the costs of the Launch Approval Engineering Process
  - Assumed a secondary science instrument was contributed
- Small RPS could provide small spacecraft with a relatively high power (~60 We) option for missions to deep space destinations (> 10 AU) with multiple science instruments.
  - Study of Centaur mission demonstrated the ability to achieve New Frontiers level science
- Multiple spacecraft possible with small RPS, allowing for multiple targets, science from multiple platforms, and/or redundancy.

Why Space Ops 2014 Presentation?

- The mission is interesting and challenging from a mission operations perspective.
  - Invite feedback and conversation to ensure that the concept is feasible and cost is credible from operations perspective
- This multiple spacecraft mission architecture offers high science value for the cost, and would be a useful option for future missions.
  - Suggest consideration of this mission architecture approach for future missions
- Need to find solutions for operations challenges and constraints
  - Operations architecture that allows for simultaneous operation of constellation of four RPS-powered SmallSats
  - Ways to de-conflict spacecraft critical events, given four SmallSats launching together
  - Resolution of unique mission planning concerns for each SmallSat depending on target body and science goals

Acknowledgements

This research was carried out at the Glenn Research Space Center and Jet Propulsion Laboratory, California Institute of Technology, under a contract with the National Aeronautics and Space Administration.

The cost information contained in this document is of a budgetary and planning nature and is intended for informational purposes only. It does not constitute a commitment on the part of NASA, JPL and/or Caltech.

Special thanks to Dr. Andrew Rivkin from the Johns Hopkins University Applied Physics Laboratory, Dr. Julie Castillo from the Jet Propulsion Laboratory and COMPASS Team from the Glenn Research Center.

Members of the COMPASS Team were:

- Melissa Mcguire (System Integration, MEL),
- Jeff Woytach (PEL, CONOPs, Launch Vehicle),
- Waldy Sjauw (Mission),
- Mike Martini (GN&C),
- James Fittje (Propulsion),
- John Gyekenyesi (Structures),
- Tony Colozza (Environmental),
- Paul Schmitz (Power),
- Glenn Williams (C&DH/Software),
- Joe Warner (Communications),
- Tom Packard (Configuration)
- Jon Drexler (Cost).

Questions?