SPACECRAFT ENVIRONMENTAL TESTING
SMAP (Soil, Moisture, Active, Passive)

Keith Fields
Jet Propulsion Laboratory,
California Institute of Technology
Pasadena California

ABSTRACT

Testing a complete full up spacecraft to verify it will survive the environment, in which it will be exposed to during its mission, is a formidable task in itself. However, the "test like you fly" philosophy sometimes gets compromised because of cost, design and or time. This paper describes the thermal-vacuum and mass properties testing of the Soil Moisture Active Passive (SMAP) earth orbiting satellite. SMAP will provide global observations of soil moisture and freeze/thaw state (the hydrosphere state). SMAP hydrosphere state measurements will be used to enhance understanding of processes that link the water, energy, and carbon cycles, and to extend the capabilities of weather and climate prediction models. It will explain the problems encountered, and the solutions developed, which minimized the risk typically associated with such an arduous process. Also discussed, the future of testing on expensive long lead-time spacecraft. Will we ever reach the "build and shoot" scenario with minimal or no verification testing?

KEY WORDS

Chamber

Thermal

Flight

Spacecraft

Mission

Schedule

SMAP Spacecraft in JPL/ETL 25' Chamber

INTRODUCTION

SMAP observatory will provide global observations of soil moisture and freeze/thaw state (the hydrosphere state). SMAP hydrosphere state measurements will be used to enhance the understanding of processes that link the water, energy and carbon cycles, and to extend the capabilities of weather and climate prediction models. The observatory consists of the RBA (Reflector Boom Assembly), Spun Platform Assembly (SPA), Spacecraft (Bus, LVA (launch vehicle adaptor), and Solar Arrays).

The SMAP mission is scheduled to launch in 2014 on A Delta IV launch vehicle. The Boom assembly, Reflector, and Solar array are stowed for launch as shown below. Marmon clamp or separation band is used to separate the observatory from the launch vehicle. The mass of the entire observatory at launch is not to exceed 1197.8 kg (2640.7 lbs) .

SMAP will provide global measurements of soil moisture and its freeze-thaw state. These measurements will enhance understanding of processes that link Earth's water, energy, and carbon cycles. SMAP will extend current capabilities in weather and climate prediction. SMAP data will be used to develop improved flood prediction and drought monitoring capabilities. NASA's Jet Propulsion Laboratory (JPL) in Pasadena, Calif. manages SMAP.

SMAP MISSION CONCEPT

The NRC (National Research Council) decadal survey report recommends early launch of a Soil Moisture Active/Passive (SMAP) mission to provide global measurements of soil moisture and freeze/thaw state via L-band radar and radiometry. Following the publication of the NRC report, NASA Headquarters tasked the Jet Propulsion Laboratory (JPL) to perform a mission study based on the decadal survey's SMAP description to assess the mission science, its requirement maturity, implementation readiness, and cost realism.

The mission study team started by refining the science objectives described in the NRC report, filling in details as needed to extract the core science and instrument requirements. The team then considered the mission architecture required to meet those requirements, using the suggested implementation approach provided in the survey as a starting point. The study's primary goal was to address the core science and applications requirements within the suggested cost range. Consistent with report recommendations, the team considered additional science and applications areas that could benefit from the baseline SMAP mission, or the baseline mission with small augmentations, in order to allow consideration of the entire trade space.

Mission study results included an evaluation of the maturity and technical readiness of the SMAP mission, cost estimate, and list of suggested next steps to move the concept forward toward the implementation phase. Results of the SMAP mission study were presented to the workshop participants in plenary session and are summarized here.

SCIENCE OBJECTIVES

SMAP will provide a capability for global mapping of soil moisture and freeze/thaw state with unprecedented accuracy, resolution, and coverage. SMAP science objectives are to acquire space-based hydrosphere state measurements over a three-year period including:

- Understand processes that link the terrestrial water, energy and carbon cycles
- Estimate global water and energy fluxes at the land surface
- Quantify net carbon flux in boreal landscapes
- Enhance weather and climate forecast skill
- Develop improved flood prediction and drought monitoring capabilities

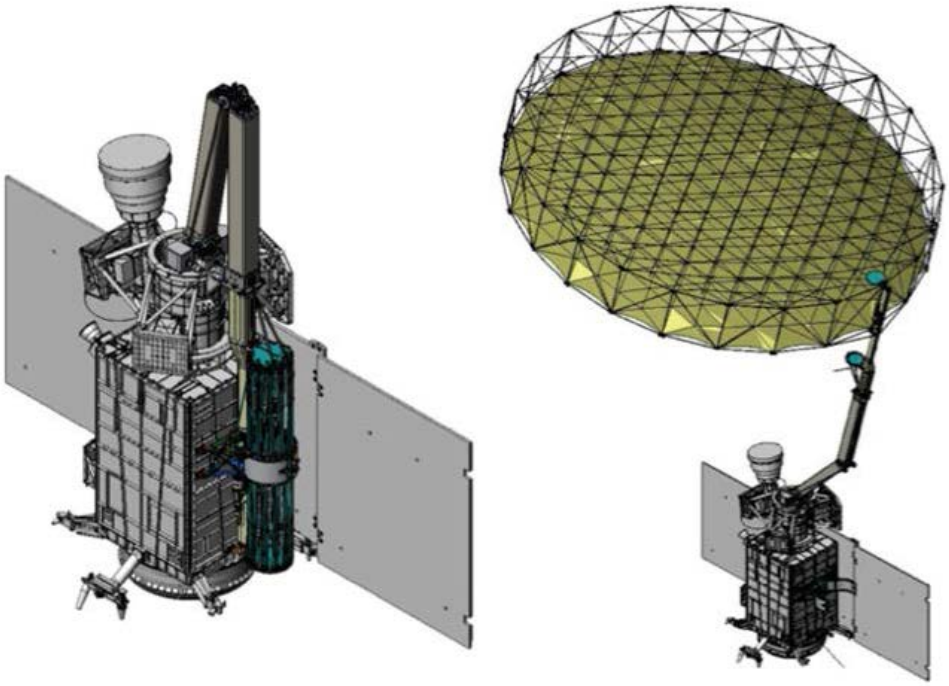

SMAP OBSERVATORY

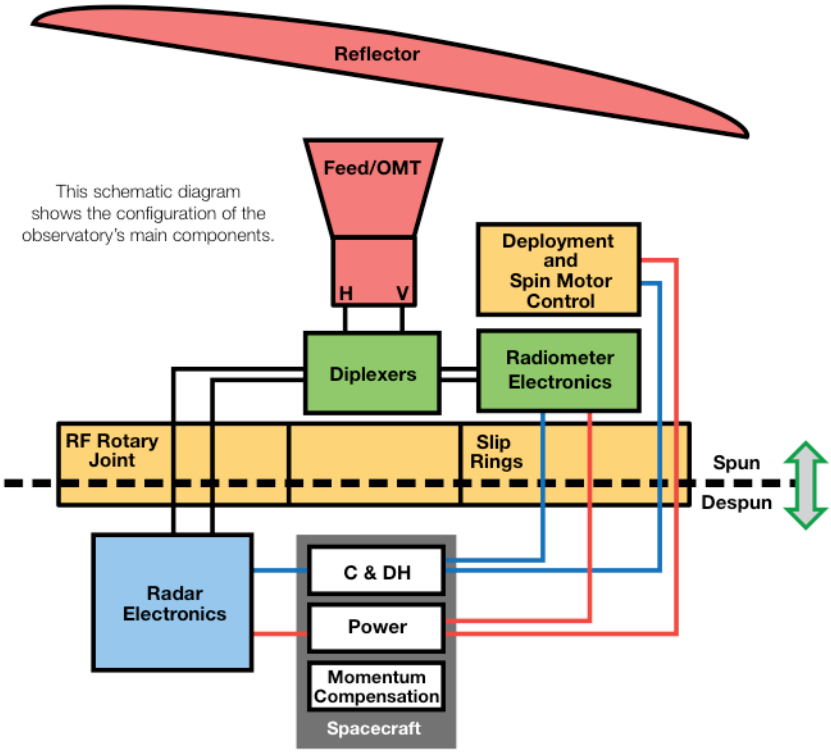

MAJOR SMAP SPACECRAFT COMPONENTS

Radar

- Frequency: 1.26 GHz
- Polarizations: VV, HH, HV (not fully polarimetric)
- Relative accuracy (3 km grid): 1 dB (HH and VV), 1.5 dB (HV)
- Data acquisition:
  - High-resolution (SAR) data acquired over land
  - Low-resolution data acquired globally

Radar Data

The radar high-resolution measurement samples are created within the radar real-aperture footprint by synthetic aperture processing in range and azimuth. The synthesized single-look samples have variable spatial resolution in the azimuth direction. The single-look samples are averaged (multi-looked) onto 1-km grid pixels to form the L1C_S0_HiRes data product. The spatial resolution of the data in this product is better than 3 km over the outer 70% of the 1000-km swath.

Radiometer

- Frequency: 1.41 GHz
- Polarizations: H, V, 3rd & 4th Stokes
- Relative accuracy (30 km grid): 1.3 K
- Data collection:
  - High-rate (sub-band) data acquired over land
  - Low-rate data acquired globally

Radiometer Data
The radiometer instantaneous field of view (IFOV) or 3-dB footprint is 39 km x 47 km. The radiometer L1B_TB data product includes compensation for effects of antenna sidelobes (outside the main beam), cross-polarization, Faraday rotation, atmospheric effects (excluding rain), and solar, galactic and cosmic radiation.

Antenna

- Conically-scanning deployable mesh reflector shared by radar and radiometer
- Diameter: 6 meters
- Rotation rate: 14.6 RPM
- Beam efficiency: ~90%
- Spatial Resolution:
    - Radiometer (IFOV): 39 km x 47 km
    - SAR: 1-3 km (over outer 70% of swath)
- Swath width: 1000 km

EARLY ADOPTORS (as of May 2014)

An early adopter or Lighthouse Customer is an early customer of a given company, product, or technology; in politics, fashion, art, and other fields, this person would be referred to as a trendsetter.

Weather and Climate Forecasting
Meteorological Research Division, Environment Canada (EC)
European Centre for Medium- Range Weather Forecasts (ECMWF)
NOAA National Centers for Environmental Prediction (NCEP), NOAA National Environmental Satellite Data and Information Service (NOAA-NESDIS)
NOAA National Centers for Environmental Prediction (NCEP), NOAA National Environmental Satellite Data and Information Service (NOAA-NESDIS), City College of New York (CUNY)
Atmospheric and Environmental Research, Inc. (AER)
NASA Short-term Prediction Research and Transition (SPoRT)

Droughts and Wildfires
StormCenter Communications, Inc
UN World Food Programme
Hydrologic Research Center
Global Analytics
Texas A&M University

Agricultural Productivity
Agriculture and Agri-Food Canada (AAFC)
USDA National Agricultural Statistical Service (NASS)
International Research Institute for Climate and Society (IRI) Columbia University
Georgia Institute of Technology (GT)
USDA Foreign Agricultural Service (FAS)
Boise State University

University of Illinois and sponsored by John Deere Inc
Masdar Institute, UAE
Yorkshire Water, UK
Commonwealth Scientific and Industrial Research Organization (CSIRO), Australia

National Security
U.S. Army Engineer Research and Development Center (ERDC) Cold Regions Research and Engineering Laboratory (CRREL)
City College of New York (CUNY)
Institute of Environmental Physics, University of Bremen, Germany
Army Research Laboratory (ARL); U.S. Army Engineer Research and Development Center (ERDC) Geotechnical and Structures Laboratory (GSL); Naval Research Laboratory (NRL); and Colorado State University (CSU);
Institute of Oceanography, University of Hamburg, Germany
32 Total

CHAMBER INFORMATION

The 25 ft. chamber is a stainless steel cylindrical vessel 27 feet in diameter and 85 feet high. It has a 15 by 25 foot side opening access door for test payload loading. The minimum operating pressure of the chamber is 1 x 10-6 torr. The walls and floor are lined with thermally opaque aluminum cryogenic shrouds, controlled over a temperature range -196 degrees C to +93 degrees C by liquid and gaseous nitrogen. The off axis solar simulation system consists of an array of 37 xenon 25 kilowatt compact arc lamps, an integrating lens unit, a penetration window, and a one piece 23ft, 15 ton, aluminum collimating mirror. This provides a simulated solar beam that is reflected down into the test volume by the collimating mirror, which is temperature regulated with gaseous nitrogen through a range 0f -73 to + 93 degrees C. The test volume of the simulator, 20 feet in diameter and 25 feet high can be irradiated by a beam of simulated solar energy selected from a variety of beam sizes and intensities shown in the accompanying table. The maximum beam diameter is 18.5 feet.

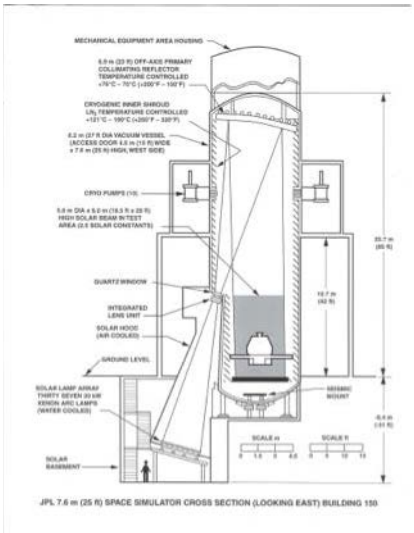

LIST of the SMAP THERMAL VACUUM TESTS

- **Floor Shroud Bi-metal Joint cryo-shock Run**
- **Chamber Empty - Pre-Test Bake Out -**
- **Sidewall Simulator** - Verify control/uniformity of six heat exchangers, without RBA.
- **RBA** (Reflector Boom Assembly) – Stowed configuration mounted the sidewall simulator
- **RBA** (Reflector Boom Assembly) – Deployed configuration mounted on the sidewall simulator.
- **IR Lamp Array –** Verify uniformity, with a calorimeter array.
- **SMAP Observatory -** Full up spacecraft, first phase.
- **SMAP Observatory -** Full up spacecraft, second phase without RBA.

Floor Shroud Bi-metal Joint cryo-shock Run

Just before the most intricate and involved test that ETL was going to test in the 25 ft. chamber this year, it just so happens that during one of our facility checkout runs we get a leak in one of the six inch floor shroud bi-metal joints. We have replaced numerous bi-metal joints before but this time there were a few issues that complicated the repair.

1. The start of the SMAP TVAC test was scheduled to start in a week.
2. The bi-metal joint was close to the sidewall of the chamber inhibiting access for the repair.
3. Dis-similar series of aluminum alloy, 5086 and 6061 needed to be welded overhead
4. The JPL safety office got involved and assigned an safety group to lead the effort of welding the bi-metal joint.

"JPL has developed and implemented a PV/S safety program that establishes requirements for ground-based PV/S. Flight-weight PV/S are under the jurisdiction of the Systems Safety Program Office. In addition, the design, fabrication, acquisition, installation, this program strictly regulates testing, repair and modification of PV/S."

All four factors mixed together played into a challenge. The big issue was that the new group though experienced in pressure, and cryogenic, systems but was not experienced in vacuum and cryogenic systems together. We replaced the bad joint and helium leak checked and found a leak in the weld. We tried to re-weld the seam but it still leaked. Since

we only had one spare joint of the required size, we decided to patch the hole in the pipe with a sleeve as described in the sketches below. We then pumped the chamber down to "cryo-shock", LN2 flood then back to ambient temperature numerous times. This approach to repair worked fine throughout the test, no problems.

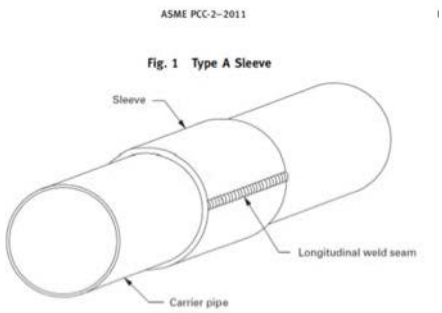

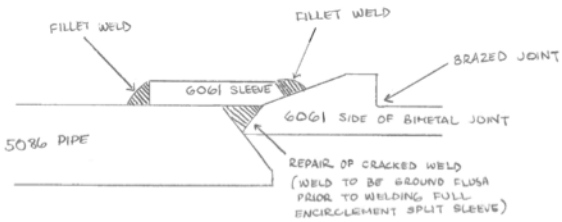

Sidewall Simulator Test

The HX (heat exchanger) verification test on the sidewall simulator enabled us to fine-tune the six zones of the Proportional Integral Derivative (PID) controller's parameters without the possibility of damaging the flight hardware. Each heat exchanger had a different temperature controller and set point, and because the close proximity to each other, when one HX set point was changed the temperature between the different zones on the side wall simulator changed. This offset was different at different temperature levels, which required us to test everything at all the flight hardware temperature set points. The sidewall simulator simulated the thermal properties of the spacecraft attach points.

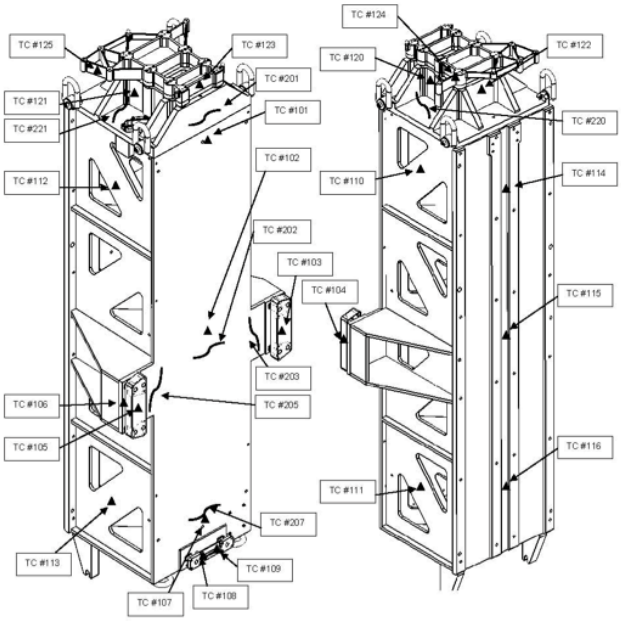

Sidewall Simulator

RBA (Reflector Boom Assembly)
Stowed and deployed configuration

The SMAP reflector and boom assembly (RBA) is a proto flight unit designed and manufactured by Astro Aerospace. This unit (in a fully stowed configuration) has been subjected to thermal vacuum testing at proto flight temperature levels. Testing includes one cycle each at the non-operating cold and non-operating hot temperature extremes. Following this non-operating cycle are three cycles each at the operating cold and operating hot temperature extremes. A cradle release and partial deployment (first motion) of the RBA was performed at the final (third) cold operational temperature extreme.

The purpose of the thermal vacuum test is to demonstrate the design, manufacture, and installation of the reflector to operate (first motion release only) in the worst-case on-orbit thermal environments and to withstand the resultant loads imposed on a stowed reflector/boom assembly while exposed to test temperature extremes.

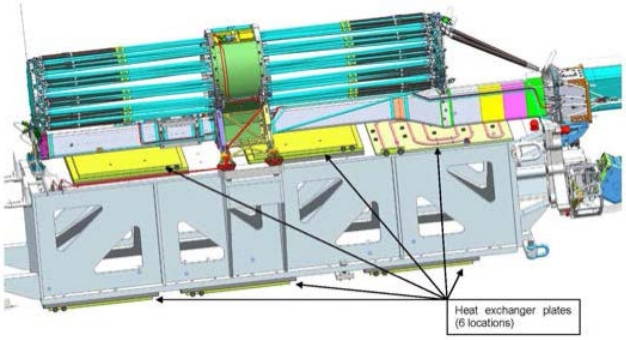

Heat Exchanger Locations

RBA Mounted on the First Motion Fixture Test Stand

IR Lamp Array – Verify flux uniformity, with a calorimeter array.

The test scope is limited to the characterization of the IR lamp array. The characterization test is intended as a dry-run test of the lamp array to identify (and fix) any potential operational and flux uniformity issues long before its use at the observatory-level thermal balance test. The characterization effort, including acquiring operational experience of the new SMAP lamp array, reduces thermal risk and increases the likelihood of successful usage when combined with flight hardware.

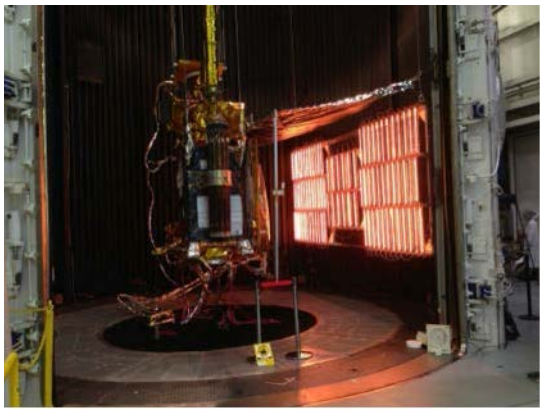

SMAP Spacecraft with IR Lamps

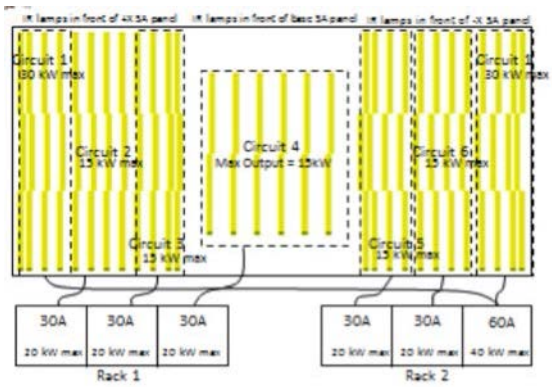

Block Diagram of IR Lamps

SMAP Observatory - Complete spacecraft, first phase

The primary test objective of this procedure is to support the SMAP Thermal Balance Test. This includes the necessary flight system electrical and software configuration for each phase of the test.

Other objectives include the following:

A. Perform a pyro release solar array deployment (during stowed configuration test).
B. Perform Baseline SOH (state of health) and verify all Observatory Interfaces Function at various temperatures.
C. Gather data for the flight computer to correlate internal clock data with temperature.

The scope of this test includes supporting the thermal design validation in addition to functional testing of the integrated observatory. The spacecraft will be set to Test Mode for the duration of the test. A baseline Functional Test will be performed prior to the start of this test and following the completion of the Stowed TVAC test.

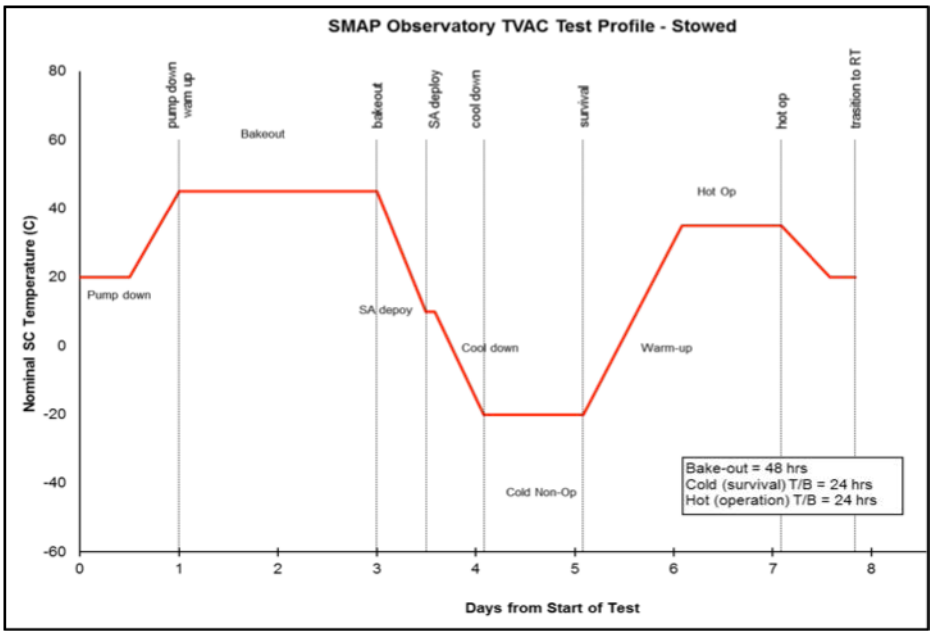

SMAP Observatory Test Profile

SMAP Observatory - Stowed Config TVAC Test								
Test Case	Description	Test Objective	SC Temp (°C)	Chamber Pressure (Torr)	Shrouds (°C)	IR Lamp (W/m^2)	Estimated Duration (Hours)	Elapsed Time (Days)
1	Pump-down	High vacuum	20	Atm to 300 then to 10^{-5}	20	0	24	1.0
2	Bakeout	Contamination control	45	$< 10^{-5}$	40	0	48	3.0
Cold Cases								
3	Cool Down	Cool SA hinge to -50°C	0	$< 10^{-5}$	-60	0	24	4.0
4	Solar array deploy	Deploy at cold	0	$< 10^{-5}$	-60	0	2	4.1
5	Survival (cold non-op)	Design validation Heater validation RBA thermal balance	-20	$< 10^{-5}$	-60	750	24	5.1
6	Transition to hot (cold to hot)	Hardware time constant Model correlation	-20 / 40	$< 10^{-5}$	-30	1100	24	6.1
Hot Cases								
7	Hot Op	Science characterization Hardware verification Design validation RBA thermal balance	40	$< 10^{-5}$	-30	1100	24	7.1
8	Transition to RT (hot to ambient)	Hardware time constant Model correlation	40 / 20	$< 10^{-5}$	30	0	18	7.8
Chamber Break								
						Total Time (hours) =	188	
						Total Time (days) =	**7.8**	

SMAP Observatory Test Requirements

Spacecraft Installation

The spacecraft was installed in the chamber by mounting the spacecraft on a dolly, rolling the dolly up ramps to a false floor in the chamber, and then it was lifted with a monorail crane and attached to six cables. These cables were connected to three chamber hard points located at the 50ft level. The false floor was then removed from the chamber before the test was started.

Contamination Control

The JPL project contamination engineer monitored the chamber contamination control throughout the different phases of the testing. Numerous witness plates were replaced at each of the seven pump downs of the chamber. After the preliminary bake out run, the chamber stayed clean even through there was a lot of GSE installed in the chamber. This is very important to the spacecraft but also as a facility the 25ft chamber has a collimating mirror we need to protect.

Also utilized were CQCM's (3ea) and a RGA (Residual Gas Analyzer)

Test Like You Fly

One of the most important lessons in the space launch business is that hardware and software must be tested in the same manner that they will be flown. Exceptions to the test-like-you-fly approach have resulted in mission failures and represent an increased program risk that must be addressed.

For example: The Mars Polar Lander one of the three testing deficiencies included; "The thermal design of the propulsion subsystem was incorrectly characterized in system thermal-vacuum test due to an error in the thermal model, causing major errors in the propulsion thermal design that went undetected until after launch".

There are numerous software and hardware tests that are performed on a spacecraft; most are done at a sub-assembly level. But the key to a successful mission is an "End to End" test, which will identify anomalies not discernable in any other test before launch. End to end testing provides a uniquely effective opportunity for flight ops team familiarization, training and process validation.

SUMMARY AND CONCLUSION

The SMAP spacecraft thermal vacuum testing consisted of eight separate tests from the checkout runs to repair verification runs to two functional tests of the complete SMAP spacecraft. The 25 ft. chamber space simulator ran excellently with only a few minor problems. The project test requirements were met and or exceeded. Everyone was satisfied with the results and how the chamber ran. In conclusion, the only recommendation is that the chamber/building is old (1961) and there have been upgrades to the facility in the past. Now is the time to perform another upgrade to guaranty that we do not lose a valuable capability.

REFERENCES

Soil Moisture Active/Passive (SMAP) Mission NASA Workshop Report July 9-10 2007
SMAP.JPL.Nasa.Gov Website
SMAP Mission Brochure 508
Astro Aerospace
JPL/ETL Detailed Test Procedure 25-ft Space Simulator JPL PROCEDURE 150-SS-25: SMAP RBA Issue Date: 02/24/2014
NASA ENGINEERING NETWORK website Public lessons learned Entry No. 1196

BIOGRAPHY

Keith Fields works in the Environmental Testing Laboratory at JPL as a test engineer and the 25FT Space Simulator facility engineer. Mr. Fields supports and implements the environmental chamber certification program at JPL and vendor sites. He also is the mass properties equipment engineer for JPL. He worked for Advanced Microwave Devices, Spire Corporation, and Varian Associates before coming to JPL in 1992. Mr. Fields has over 34 years of environmental testing and semi-conductor production experience.

ACKNOWLEDGEMENTS

This research was carried out at the Jet Propulsion Laboratory, California Institute of Technology, under a contract with the National Aeronautics and Space Administration. My appreciation to the many people who contributed to this paper big and small, it would be difficult to list them all, so I will just say thank you.

Reference herein to any specific commercial product, process, or service by trade name, trademark, manufacturer, or otherwise, does not constitute or imply its endorsement by the United States Government or the Jet Propulsion Laboratory, California Institute of Technology.

© 2014 California Institute of Technology. Government sponsorship acknowledged.