# Automated Scheduling of Science Activities for Titan Encounters by Cassini

Trina L. Ray[1] and Russel L. Knight[2], Dave Mohr[3]
*Jet Propulsion Laboratory, California Institute of Technology, Pasadena, CA 91109*

**In an effort to demonstrate the efficacy of automated planning and scheduling techniques for large missions, we have adapted ASPEN (Activity Scheduling and Planning Environment) [1] and CLASP (Compressed Large-scale Activity Scheduling and Planning) [2] to the domain of scheduling high-level science goals into conflict-free operations plans for Titan encounters by the Cassini spacecraft.**

**The Cassini mission is a cooperative undertaking between NASA ,ESA and ASI and has been in orbit for nine years, returning a wealth of scientific data from Titan and the Saturnian system. Previous work has documented how the Cassini operations team has historically produced operation plans [3].**

**Automated techniques might be used to increase the responsiveness of science operations planning, reduce the costs of such planning, and also provide insight to mission design decisions during mission planning.**

**With respect to reducing cost, science plans entail a significant period of a project's prime mission. The Titan Orbital Science Team (TOST) spent considerable efforts to integrate the science plans in the +/- 20 hours around the targeted flybys [4]. The Titan team produced master timelines for each flyby, identifying prime science observations and allocating control of the spacecraft attitude to specific instrument teams. This effort required dozens of science team members, and substantial engineering team support over many years in a highly contentious, intensely concentrated effort. Our approach is to quickly generate these plans and then iterate with science teams in the loop to converge on an overall plan that meets science objectives and has buy in from all teams. This iteration is necessary as we need to balance the limited shared resources (particularly pointing) of the spacecraft between the disciplines (Titan Interior, Surface, Atmosphere, and Magnetospheric Interaction) and the 12 instruments of the Cassini Orbiter (which include 4 optical remote sensing, 1 radio science, 1 RADAR, and 6 fields and particles instruments). Once a final plan is established, certain events can still lead to necessary adjustments – e.g. changes to the nominal trajectory, a failed instrument, DSN losses/changes, spacecraft safing or ground events [5]. In such cases, ASPEN and CLASP can be used to assess the impact and replan relatively quickly.**

**The adaptation of ASPEN and CLASP for Titan flyby planning focused on representing instrument contention and science team scoring. We document the various states and resources used to model these, as well as the activity descriptions that decompose high-level science goals into detailed, conflict-free operations plans.**

[1] Cassini Titan Orbiter Science Team Co-chair, JPL, 4800 Oak Grove, MS 230-205, Pasadena CA 91109
[2] Technologist, Artificial Intelligence Group, JPL, 4800 Oak Grove, MS 230-205, Pasadena CA 91109
[3] Technical Group SupervisorInsert Job Title, Department Name, Address/Mail Stop, and AIAA Member Grade for third author.

**We then compare the results of the automated science plan generation to the science plan created by the Titan team group and assess science return. This leads to an investigation of which choices (of weights to various science objectives) ended up creating wildly different master timelines. By adjusting the weights and the model we can quickly produce trade studies that the TOST team was unable to produce in the real planning due to the amount of time and effort each hypothetical option cost.**

**Finally, we note that Titan planning can act as a proxy for overall Cassini Science Planning which also is multi-disciplinary (Rings, Saturn, Titan, Icy Satellite, and the Magnetosphere) and multi-instrument, as well as a proxy for many other missions in the future.**

## Nomenclature

| | | |
|---|---|---|
| *ASPEN* | = | Activity Scheduling and Planning Environment |
| *CLASP* | = | Compressed Large-scale Activity Scheduling and Planning |
| *CSM* | = | Cassini Solstice Mission |
| *DSN* | = | Deep Space Network |
| *HGA* | = | High Gain Antenna |
| *MAPS* | = | Magnetospheric and Plasma Science |
| *ORS* | = | Optical Remote Sensing |
| *OST* | = | Orbital Science Team |
| *PSG* | = | Project Science Group |
| *TOST* | = | Titan Orbiter Science Team |

## I. Mission, Spacecraft, Instruments

THE CASSINI-HUYGENS mission to Saturn is a collaborative effort of NASA, ESA, and the Italian Space Agency[3]. The spacecraft launched on October 15, 1997 on a Titan IV-B/Centaur launch vehicle. After seven years, 3.2 billion kilometers (2 billion miles), and 4 gravity-assist flybys of other planets, it entered orbit on July 1, 2004. The spacecraft studied the planet, its rings, and its magnetosphere over the course of 76 varied orbits in the prime mission. To study Saturn's satellites, the spacecraft made targeted flybys of Phoebe, Hyperion, Dione, Rhea, and Iapetus, along with 3 flybys of Enceladus, and 45 of Titan. In summary, the Cassini prime mission was the most complicated gravity assist tour ever flown.[2] The Cassini Orbiter also carried along the Huygens probe, destined to measure Titan's atmosphere *in situ* and land on Titan's surface. The probe was deployed on December 25, 2004. Three weeks later, on January 14, 2005, it entered Titan's atmosphere and landed on the surface 2 hours later. The probe sent measurements and images to Cassini for transmission to Earth.

The spacecraft communicates with Earth largely through one high gain antenna but also carries two low gain antennas. Three radioisotope thermal electric generators provide power.

Cassini's twelve science instruments are grouped into three categories: Optical Remote Sensing, Fields/Particles/Waves, and Microwave Remote Sensing. The Optical Remote Sensing suite is comprised of a visible wavelength imaging camera (Imaging Science Subsystem, or ISS), an ultraviolet imaging spectrometer (UVIS), and infrared instruments (Cassini Infrared Spectrometer, or CIRS, and Visible and Infrared Mapping Spectrometer, or VIMS). The Fields/Particles/Waves suite is comprised of a magnetometer (MAG), cosmic dust analyzer (CDA), radio and plasma wave system (RPWS), ion and neutral mass spectrometer (INMS), plasma spectrometer (Cassini Plasma Spectrometer, or CAPS), and a magnetospheric imaging instrument (MIMI). The Microwave Remote Sensing suite is comprised of RADAR and the Radio Science

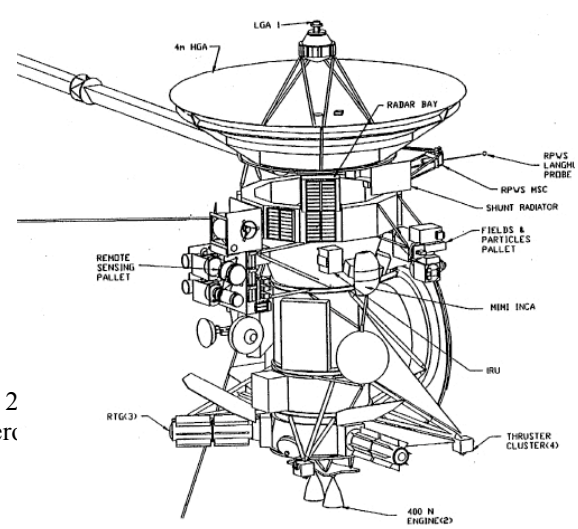


**Figure 1. The Cassini Spacecraft**

Instrument (RSS), both of which use the high-gain antenna as an instrument.

Figure 1 identifies the science instruments. The Cassini mission requires operations on a global scale, and multiple time zones. In the final spacecraft configuration, the instruments were all mounted to the body of the spacecraft instead of a scan platform, which posed the single greatest challenge to operation complexity. The entire spacecraft must be rotated for any one instrument to achieve a desired target, and then the entire spacecraft must be rotated to point the high-gain antenna to earth to downlink the collected data. However, the optical remote sensing instruments are roughly co-aligned so they can often collect data collaboratively. On a typical Titan flyby the spacecraft collects science data for 30-40 hours by pointing the spacecraft at a variety of targets. One instrument at a time controls the pointing of the spacecraft, and other instruments may "ride along" and collect data at the same time if the data is useful to them. There are some operational restrictions to riding along; for instance, the two Microwave Remote Sensing instruments (RADAR and Radio Science) are both major power consumers and cannot be operated simultaneously.

The Cassini Project completed tour planning for an additional 7-year phase called the Cassini Solstice Mission (CSM) that will extend the mission lifetime through Saturn's northern summer solstice. This extension permits observations of seasonal change across nearly half a Saturnian year, and has an additional 56 targeted Titan flybys.

## II. Titan Planning in the Cassini Solstice Mission

The CSM TOST jumpstart allocated all of the Titan flyby closest approach periods among the 12 science instrument teams, including agreement on what science would be accomplished during each flyby[4]. By looking at all 56 flybys at once, the best balance of interior, surface, atmospheric, and magnetospheric interaction science was achieved. By deciding on the closest approach attitudes early, it was possible to influence the final trajectory production and change some flyby altitudes to improve scientific return.

The entire Jumpstart process took over a year, starting with the CSM tour decision at the January 2009 PSG Meeting to final integrated conflict-free timelines out to the segment boundaries completed. It was a five stage process:

1. Team prioritization of initial inputs. Allowing all parties to present their inputs, but requiring each group to create and share an internal prioritization, helped the group arrive at an overall allocation with the best possible balance between all groups.
2. Group discussion of each flyby and its best use, but no decision on any single flyby closest approach.
3. Determination of all closest approach science in a single proposal and assessed against overall balance. Looking at all opportunities at once allows for trades across the entire set. Although it may seem inefficient at first (no decisions in the early meetings – only a single final decision at the end), Cassini felt it was a very efficient use of key personnel's time.
4. Requesting tour tweaks (necessary to optimize Titan science but not relevant to this planning discussion)
5. Templatizing out to the segment boundaries. Integration templates (Fig. 2) were created and used to simplify the planning process. Depending solely on the observation time relative to closest approach, and whether Titan's visible hemisphere is illuminated or unilluminated, TOST scientists can select a template and immediately "plug in" a pre-integrated timeline. One set of about 12 templates covers the period extending from –5 to –2 hours prior to closest approach on the inbound leg, and also +2 to +5 hours after closest approach. The 5 to 9 hour period has about 8 templates, the 9 to 13 hour period has ~4, and the 13 to 24 hour period has two. The templates were created by letting TOST integrate the first 20 flybys without any restrictions, and then determining that there was, in fact, a pattern (or subset) to the integrated activities. The original set of templates was simply each "type" of planned observation, broken down by range.

Steps 1-3 took about 2 months and included an in person full day kickoff meeting, and then a 3 day in person workshop 2 months later. Step 5 occurred across roughly 15 hours of telcon time, with substantial prep work and home work on the part of the science teams and the engineerings supportin the TOST Jumpstart in and around all workshops and telcons.

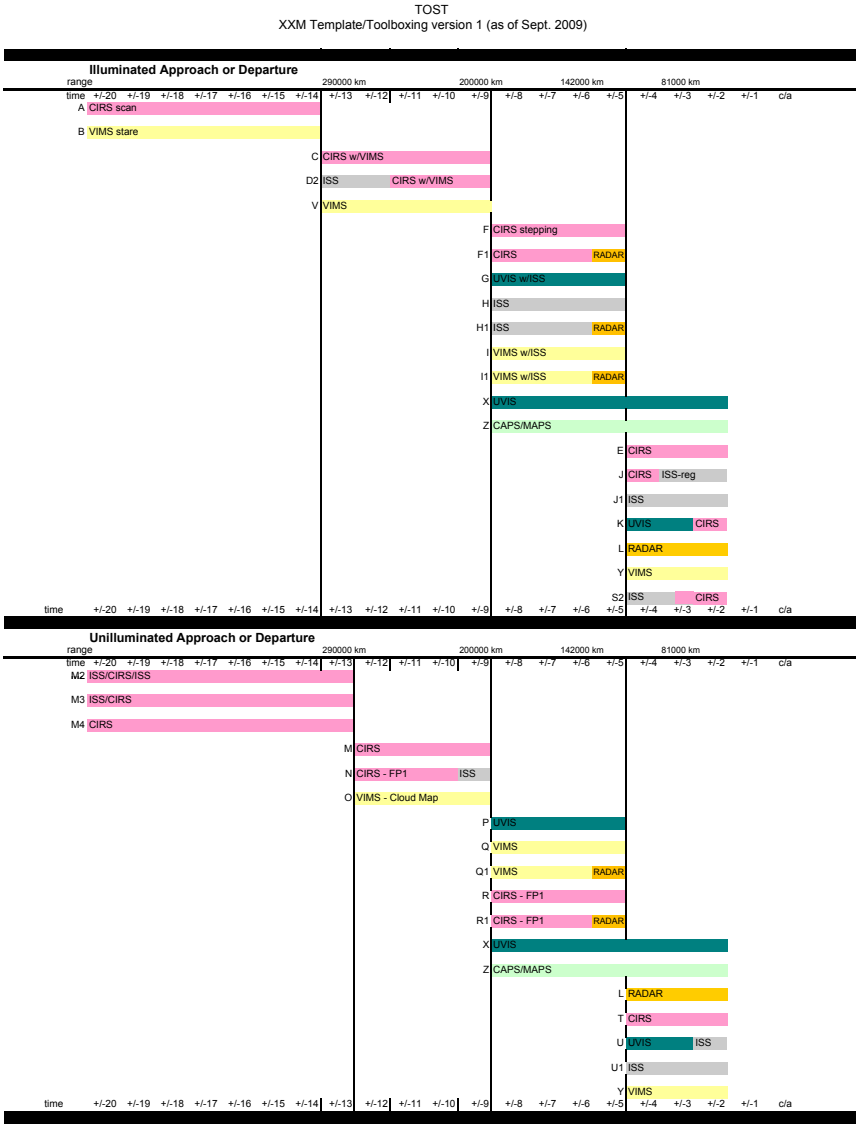


**Figure 2. Titan Integration Templates. The top set of templates is for use during illuminated periods; the bottom set for unilluminated periods. Each template shows what instrument (and in some cases what field of view) chooses the spacecraft attitude. Templates can be used symmetrically with respect to closest approach; for example, Template R can be used from -09:00 to -05:00 on an unilluminated inbound leg, or from +05:00 to +09:00 on an unilluminated outbound leg.**

## III. ASPEN

ASPEN (Activity Scheduling and Planning ENvironment)[1] is a planning and scheduling framework that has heritage in planning and scheduling for spacecraft operations. It is a is a declarative modeling system: types of resources and activities are modeled, instances of requests are levied, and a schedule is assembled that respects the resources and activities.

### A. Shared States and Resources

Shared Resources are modeled as discrete values over time. Many different types of shared resources exist in ASPEN; here we focus on those used for modeling the Cassini/Titan domain. These include Atomic Resources and State Variables.

An Atomic Resource is used for the entire duration of whatever activity is using the resource and not usable by any other activity over the same duration. One can think of this as "only one activity can use this at a time" constraint.

A State Variable represents a discrete value over time. For example, a string State Variable might represent whether an instrument is "ON" or "OFF" at a certain time. A double State Variable might represent the latitude of the NADIR point of the spacecraft at any given time. There are two types of constraints on state variables: the state-changer constraints and the state-requirement constraints.

State changer constraints (found in activities and occurring either at the start time or the end time) cause the constrained state to be a certain value. For example, if we intend that an activity represent turning on an instrument, then it would have a state-changer constraint that indicates that the instrument is "ON".

State requirement constraints (found in activities and required to be true for the full duration of the activity) require that during the activity the constraint holds true. For example, if the instrument must be on to perform an experiment, then the containing activity representing the experiment would have a state requirement constraint that indicates that the instrument must be "ON".

Some state variables represent numeric values, as our example of latitude. In this case, state requirement constraints can indicate ranges, for example an observation activity may have constraints that require latitude to be less than 50 degrees and greater than 5 degrees (two separate constraints).

### B. Activities

An activity in ASPEN represents some action or task. Activities have start times, end times, and durations (as opposed to shared resources, which cover the entire time of interest). Activities may have constraints on shared states and resources. Activities may also require a "supporting cast" of other activities.

Similar to hierarchical task networks [xxx], ASPEN activities represent a required "supporting cast" of activities as decompositions. A decomposition is a list of activities that always exist if the "parent" activity exists.

### C. Optimization

ASPEN also has the ability to characterize what a "good" schedule is based on various properties of the schedule [xxx]. The framework allows us to specify preferences against which the schedule is evaluated. Each preference is an expression of some component of a "score" that will be computed. The preferences we use for our adaptation are duration maximizing preferences and activity count preferences.

Duration maximizing preferences indicate that the more summed duration of a state or schedule, the higher the quality of that schedule.

Activity count preferences indicate that the more activities of a certain type in a schedule, the higher the quality of that schedule.

Issues arise when comparing different constraints with each other. ASPEN allows for two mechanisms to provide reasonable comparisons: numeric weights and value functions.

Numeric weights simply increase or decrease the contribution of the individual preference to the overall preference score. Adjusting individual rates allows users to tweak the comparative importance of preferences.

Value functions allow for "fairness" curves. The most common value function is the exponential function, which allows increasing preference values to approach 1 without ever exceeding 1. This is especially convenient when comparing activity counts to summed durations.

Based on this score, ASPEN has the ability to search for better and better schedules by iteratively taking individual actions that improve individual preferences. This approach often leads to good schedules quickly, but optimal schedules require different algorithms. The ASPEN framework allows for custom algorithms to be plugged-in and operate on the schedule. Our approach section describes the algorithm used for Titan flybys.

## IV. Approach

For Titan flybys, everything is distributed around the moment of closest approach, thus we model closest approach according to the required science campaign for each instrument. (Different instruments have different requirements for science during various phases of the approach.) For each instrument, we must model the mutual exclusions and use of the instrument. For each type of science campaign, we must model the requirements of that campaign with respect to instrument use, latitude and longitude constraints, solar phase angle constraints (to include illumination), and timing with respect to closest approach. Some types of experiments have unique constraints, e.g., stellar occultations may only be observed when a star is in the appropriate geometry… no other observation would make use of this but it is still modeled as a "shared" resource.

After modeling, we produce schedules using our custom scheduling algorithm and adjust the weights of the preferences by hand until we have a "reasonable" schedule.

### D. Modeling

1) Closest Approach: The times of interest distributed around closest approach are modeled as State Variable named CA. Table 1 includes the detail, but it should be noted that for this effort, INMS is the only F&P instrument for which observation constraints were generated. The purpose of this was partly to streamline this demonstration, but mainly due to the fact that a large percentage of the F&P data is obtained simply by negotiating a favorable data collection rate. In fact, F&P instruments can collect valuable science data "riding along" with *any* other science activity at *any* spacecraft attitude.
2) Instruments: Each instrument we create an "in use" activity. This activity ensures that no two higher-level observation goals are allowed to use the instrument at the same time and that all mutual exclusion constraints between instruments are respected. We employ an atomic shared resource to enforce only one goal using an instrument at a time. We also employ an instrument state variable that is either "ON" or "OFF" to model the instrument state. Mutual exclusions are modeled as constraints on other instruments such that the other instruments must be in the "OFF" state. For example, there is a mutual exclusion between the ISS instrument and the RSS instrument. In the ISS "in use" activity, we include constraints that the RSS instrument state must be "OFF". We also include constraints that the ISS be changed to "ON" for the duration of the activity and "OFF" at the end. Conversely, the RSS instrument "in use" activity would require that the ISS instrument be "OFF", thus enforcing the mutual exclusion. Table 2 summarizes the mutual exclusion rules used for this demonstration.
3) Profiles: Much of the scheduling information used is static information that is loaded and used as fixed profiles against which we attempt to schedule our observations. These profiles are extracted from the Cassini mission data.
    a. Latitude/Longitude: Latitude and Longitude are modeled as numeric state variables. This allows us to levy "must be greater than" and "must be less than" constraints on each
    b. Phase Angle: The phase angle (angle between the spacecraft->Titan and Sun->Titan vectors) is also modeled as a numeric state variable
    c. Distance: Distance between the spacecraft and Titan is also modeled as a numeric state variable.
4) Occultations: Each type of occultation (Earth and stellar) are modeled as string state variables and initialized from the Cassini mission data.
5) Observation Activities: To represent actually taking observations, we model each type as an observation activity. Each type of observation activity carries with it the constraints of the observation, e.g., within 30 minutes of c.a., phase angle must be less than 80 degrees [illuminated]), etc.. Each observation activity also requires an instrument "in use" activity for the appropriate instrument, thus enforcing mutual exclusions.

**Table 1 Enumerating Cassini's Science Observation Constraints for Titan Flybys**

With the goal of generating observation timelines for each of Cassini's 56 Titan flybys during the Solstice Mission, observation goals in the form of geometric constraints were generated. This defined the scheduling opportunities for each science activity type.

| Science Activity | Can occur when … |
|---|---|
| RADAR SAR - High-Value | - flyby altitude is < 1500km<br>- S/C is within +/-30min of closest approach (C/A)<br>- latitude is between 75 and 83deg N<br>- longitude is between 225 and 270deg W |
| RADAR SAR | - flyby altitude is < 1500km<br>- S/C is within +/-30min of C/A |
| RADAR Radiometry | - altitude is between 5000-15000km<br>- preference that this is done on SAR flybys |
| ISS Atmosphere/Surface | - altitude is between 20K & 500K km<br>- solar incidence angle <100deg (i.e. Titan is lit)<br>- strong preference for lower solar phase angles |
| ISS Low-phase | - altitude is between 20K & 500K km<br>- solar incidence angle < 30 deg |
| VIMS Surface | - altitude <5000 km<br>- solar incidence angle < 100deg<br>- must be a minimum of 30min continuous |
| VIMS Surface Hi-Res | - altitude <20K km<br>- solar incidence angle < 30deg<br>- latitude is between 75 and 83deg N<br>- longitude is between 225 and 270deg W<br>- must be a minimum of 30min continuous |
| UVIS Atmosphere (Scans) | - altitude <150K and >10K km<br>- solar incidence angle <100deg<br>- must be a minimum of 4hrs continuous |
| VIMS Atmosphere (High Altitude) | - outside of +/- 3hrs of C/A<br>- solar incidence angle <100deg<br>- strongly prefer lower solar phase angles<br>- must be a minimum of 30min continuous |
| VIMS Atmosphere (Low Altitude) | - within +/- 3hrs of C/A<br>- solar incidence angle < 100deg<br>- strongly prefer lower solar phase angles<br>- must be a minimum of 30min continuous |
| VIMS Cloud Map | - spacecraft is between 16-8hr from C/A<br>- Titan is unlit (solar phase >100deg) |
| UVIS Stellar Occs | - when stellar occultations occur, as defined by CAS Tour Atlas<br>- prefer a range of latitudes, with more preference for northern hemisphere |

| | |
|---|---|
| UVIS Solar Occs | - when solar occultations occur, as defined by CAS Tour Atlas<br>- prefer a range of latitudes, with more preference for northern hemisphere |
| CIRS High-Altitude | - spacecraft is between 30-16hr from C/A<br>- Titan can be lit or unlit<br>- strong preference for more time on the timeline |
| CIRS Mid-Altitude Unlit | - spacecraft is between 16-8hr from C/A<br>- Titan is unlit<br>- strong preference for more time on the timeline |
| CIRS Mid-Altitude Lit | - spacecraft is between 16-8hr from C/A<br>- Titan is lit (solar phase <100deg)<br>- strong preference for more time on the timeline |
| CIRS Low-Altitude Unlit | - spacecraft is between 2.5-1.5hr from C/A<br>- Titan is unlit<br>- strong preference for more time on the timeline |
| CIRS Low-Altitude Lit | - spacecraft is between 2.5-1.5hr from C/A<br>- Titan is lit<br>- strong preference for more time on the timeline |
| RSS Occultations | - when Earth occultations occur, as specified by CAS Tour Atlas<br>- prefers a range of latitudes, with more preference for northern hemisphere<br>- target 3 Earth Occultations per year |
| INMS Low-Altitude | - flyby altitude is <1400km<br>- must be within +/- 30min of CA<br>- preference for 30min continuous |

## Table 2: Cassini's Mutual Exclusion matrix

Which science activities can be performed simultaneously, and which cannot. The timeline declares which instrument/activity has control of the spacecraft attitude for a specified time period. As in the case with the F&P instruments, remote sensing instruments also collect much of their science data simply by riding along with other instrument activities. However, this is often less than ideal for the riding instrument. For example, even though Cassini's remote sensing suite is essentially co-aligned, and it may be possible for data acquisition to occur simultaneously, often these instruments will have different observation objectives – some may want to scan, some may want to stare, and some may want to mosaic – each impacting the other.

| | ISS Atm/Surf | ISS Low Phase | CIRS Hi-Alt | CIRS Mid-Alt Unlit | CIRS Mid-Alt Lit | CIRS Low-Alt Unlit | CIRS Low-Alt Lit | VIMS Surface | VIMS Surface Hi-Res | VIMs Atmos Hi Alt | VIMS Atmos Low Alt | VIMS CloudMap | UVIS Atmos Scan | UVIS Stellar Occ | UVIS Solar Occ | RADAR Radiometry | RADAR SAR | RADAR SAR Hi-Value | RSS Earth Occ | INMS Low-Alt |
|---|---|---|---|---|---|---|---|---|---|---|---|---|---|---|---|---|---|---|---|---|
| ISS Atm/Surf | | | | | | | | | | | | | | | | | | | | |
| ISS Low Phase | | | | | | | | | | | | | | | | | | | | |
| CIRS Hi-Alt | | | | | | | | | | | | | | | | | | | | |
| CIRS Mid-Alt Unlit | | | | | | | | | | | | | | | | | | | | |
| CIRS Mid-Alt Lit | | | | | | | | | | | | | | | | | | | | |
| CIRS Low-Alt Unlit | | | | | | | | | | | | | | | | | | | | |
| CIRS Low-Alt Lit | | | | | | | | | | | | | | | | | | | | |
| VIMS Surface | | | | | | | | | | | | | | | | | | | | |
| VIMS Surface Hi-Res | | | | | | | | | | | | | | | | | | | | |
| VIMs Atmos Hi Alt | | | | | | | | | | | | | | | | | | | | |
| VIMS Atmos Low Alt | | | | | | | | | | | | | | | | | | | | |
| VIMS CloudMap | | | | | | | | | | | | | | | | | | | | |
| UVIS Atmos Scan | | | | | | | | | | | | | | | | | | | | |
| UVIS Stellar Occ | | | | | | | | | | | | | | | | | | | | |
| UVIS Solar Occ | | | | | | | | | | | | | | | | | | | | |
| RADAR Radiometry | | | | | | | | | | | | | | | | | | | | |
| RADAR SAR | | | | | | | | | | | | | | | | | | | | |
| RADAR SAR Hi-Value | | | | | | | | | | | | | | | | | | | | |
| RSS Earth Occ | | | | | | | | | | | | | | | | | | | | |
| INMS Low-Alt | | | | | | | | | | | | | | | | | | | | |

*If* the geometric criteria for both activities listed in Table 1 are met, then they can be performed simultaneously.

Even if the geometric criteria for both activities listed in Table 1 are met, they cannot be performed simultaneously. This is most often because the spacecraft attitude needed to perform one activity precludes the other.

### E. Optimization

Optimization is the process of generating a collection of observation activities that maximizes the computed score (which is based on the preferences). One requirement is that our approach must be an any-time algorithm, i.e., we must provide the best answer possible at the time that we are interrupted.

Our approach is to first employ ASPEN's iterative optimization to provide a lower bound on quality.

Then, we subdivide the types of observations by the phases of closest approach that they occur, and optimize these phases independently. Since these are mutually exclusive with other phases, this breaks the problem into manageable pieces. Then, for each sub-collection, we first perform a gradient descent search by checking all possible additions to be made for the best one (where "best" means that the computed score is increased the most), including that one, and iterating. This gives us a second, hopefully better, lower bound on quality.

Finally, we perturb the order of the insertions for each sub-collection in an attempt to tease out sub-otpimalities that have occurred due to the original gradient descent approach.

At some period, our user-adjustable timeout occurs, and we report the best schedule (according to score) found thus far.

## V. Conclusions

We have defined a set of Titan science activities and used ASPEN to generate optimized timelines. We've shown that the automation software can indeed be utilized to generate valid Titan science plans, based upon observation constraints that define the scheduling opportunities for each activity type, a mutual exclusion table that declares which activities may occur simultaneously, and a relative weighting, or prioritization, of activities. While it's challenging to quantitatively compare 56 human-generated Titan science plans to 56 ASPEN-generated plans, it was easy to quickly recognize agreement when it came to rare/unique opportunities such as RADAR SAR coverage of Titan's northern lakes. We also note that the software is able to see the inherent conflicts between the solar and earth occultation opportunities, and that the limited number of these opportunities were parsed out fairly. The scheduling of INMS and RADAR SAR near closest approach, and other such choices, further bolstered confidence in the tool. Lastly, the accumulation of time for the optical remote sensing instruments, being dominated by the infra-red instruments on the unlit asymptote and by the visible wavelength instruments on the lit asymptote, was also consistent with the constraints given to the scheduler.

When comparing these ASPEN timelines to those generated by the TOST group, we have taken the time to understand the differences and discrepancies. Some differences can be traced to the fact that hard constraints were supplied to the scheduler when attempting to define certain science activities; this resulted in simplified science activities that were not reflective in real-world planning. For example we provided a simpler time cut off range for various activities and the TOST timelines adjusted the time range to the beginnings and endings of externally imposed deep space network allocations, which is perfectly reasonable. Some differences come from the scheduler not having the information that the TOST group did. One example is the operational benefits of adjacent observations. Putting a Radio Science earth occultation right next to a Radio Science surface observation simplifies real-time operations and thermal equilibrium and cycling of the instrument so there is an advantage to doing that in practice. It is analysis such as this that informs us as to what the next steps should be for improving the scheduler and improving the timelines that are able to be generated. As we expand and enhance the current work, we will be looking to take out some of the enforced simplification and add in the known complexities that allowed the TOST group to create timelines that were approved by the science teams and flown on the spacecraft.

With demonstrated ability to generate optimized timelines for complex multi-instrument, multi-disciplinary objectives, working with future projects on robust planning and cost savings applications is an area for further exploration. We will continue to explore how quickly generated timelines could provide insight into mission design and mission design decisions, especially when tied back to the science traceability matrix of the mission, but that will have to be left to future work.

## Acknowledgments

This effort was carried out at the Jet Propulsion Laboratory, California Institute of Technology, under a contract with the National Aeronautics and Space Administration.

## References

[1]S. Chien, G. Rabideau, R. Knight, R. Sherwood, B. Engelhardt, D. Mutz, T. Estlin, B. Smith, F. Fisher, T. Barrett, G. Stebbins, D. Tran. "ASPEN - Automating Space Mission Operations using Automated Planning and Scheduling", *AIAA International Conference on Space Operations* (SpaceOps 2000). Toulouse, France. June 2000

[2]R. Knight, D. Mclaren, S. Hu, "Planning Coverage Campaigns for Mission Design and Analysis: CLASP for the proposed DESDyni Mission," *Proceedings International Symposium on Artificial Intelligence, Robotics, and Automation for Space*, Turin, Italy, September 2012.

[3]Paczkowski, B.G., *"*Cassini Science Planning Process*"*, *AIAA International Conference on Space Operatios* (SpaceOps 2004), May 17–21, 2004.

[4]Steadman, Kimberly B., Pitesky, Jo E.., Ray, Trina L., Burton, Marcia E., and Alonge, Nora K., *"*Cassini Titan Science Integration: Getting a "Jumpstart" on the Process*"*, *AIAA International Conference on Space Operatios* (SpaceOps 2010), April 25-30, 2010.

[5]J. Pitesky, K. Steadman, T. Ray, M. Burton "Handling Late Changes to Titan Science", *AIAA International Conference on Space Operatios* (SpaceOps 2014), Pasadena, CA, May 7-11, 2014.