Enabling Future Low-cost Small Spacecraft Mission Concepts using Small Radioisotope Power Systems

Young H. Lee[1], Brian Bairstow[2], and Rashied Amini[3]
NASA Jet Propulsion Laboratory, California Institute of Technology, Pasadena, CA 91109, USA

and

June Zakrajsek[4], Steven R. Oleson[5], and Robert. L Cataldo[6]
NASA Glenn Research Center, Cleveland, OH 44135, USA

For more than five decades, Radioisotope Power Systems (RPS) have played a critical role in the exploration of space, enabling missions of scientific discovery to destinations across the solar system by providing electrical power to explore remote and challenging environments - some of the hardest to reach, darkest, and coldest locations in the solar system. In particular, RPS has met the demand of many long-duration mission concepts for continuous power to conduct science investigations independent of change in sunlight or variations in surface conditions like shadows, thick clouds, or dust.

Considering NASA's increasingly constrained budgets, scientists and mission designers are exploring ways to develop effective, affordable planetary missions that could be implemented at a fixed cost that includes spacecraft and science payload development, launch, operations, science data analysis and all relevant mission-specific technology development. To meet this demand, the RPS Program is exploring mission applications for small RPS (sRPS) that may enable deep space missions with lower power requirements but stricter mass and volume-constraints. Low-cost, low-mass, and long-lived applications are being examined as a part of a wider study are of standalone, piggy-backed, and landed missions that may not be feasible with available power options. A Centaur Flyby SmallSat Design Reference Mission (DRM), sending four similar or identical SmallSats of about 100 kg to at least two different Centaur objects, was studied for the purpose of determining optimal qualities of sRPS to meet the needs of standalone RPS-enabled missions. The DRM was selected as it provided a well-defined science mission that should remain relevant at a point when sRPS would become available. Additionally, this DRM allows for a breadth of architectures that distinguish science return as a function of varying mission parameters.

[1] Lead, the Radioisotope Power Systems Program's Mission Analysis Team, 4800 Oak Grove Drive, Mail Stop 301-520.
[2] Systems Engineer, the Radioisotope Power Systems Program's Mission Analysis Team, 4800 Oak Grove Drive, 4800 Oak Grove Drive, Mail Stop 301-165.
[3] Systems Engineer, the Radioisotope Power Systems Program's Mission Analysis Team, 4800 Oak Grove Drive, 4800 Oak Grove Drive, Mail Stop 301-165.
[4] Manager, the Radioisotope Power Systems Program's Program Planning and Assessment, 21000 Brookpark Road, Mail Stop 142-5.
[5] Lead, Collaborative Modeling for Parametric Assessment of Space Systems (COMPASS) Conceptual Spacecraft Design Team, 21000 Brookpark Road, Mail Stop 142-3.
[6] Power System Engineer, the Radioisotope Power Systems Program Office, Brookpark Road, Mail Stop 142-5.

I. Introduction

For more than five decades, Radioisotope Power Systems (RPS) have played a critical role in the exploration of space, enabling missions of scientific discovery to destinations across the solar system by providing electrical power to explore remote and challenging environments - some of the hardest to reach, darkest, and coldest locations in the solar system. The recently reissued National Space Policy of the United States (June 2010) directs that "The United States shall develop and use space nuclear power systems where such systems safely enable or significantly enhance space exploration or operational capabilities".[1] Moreover, the National Research Council report "Radioisotope Power Systems: An Imperative for Maintaining U.S. Leadership in Space Exploration" (2009) by the Radioisotope Power Systems Committee illustrates how important RPS availability is for reaching the outer solar system where sunlight is very faint.[2]

RPS could enable many deep space missions where increased heliocentric distances reduce the ability of solar power to adequately meet spacecraft and instruments requirements. In particular, RPS could meet the demand of many long-duration mission concepts for continuous power to conduct science investigations independent of change in sunlight or variations in surface conditions like shadows, thick clouds, or dust. Some previous notable missions that were enabled by RPS include *Nimbus III*, the Apollo Lunar Surface Experiments Package, the *Pioneers 10* and *11*, the Viking Mars Landers, *Galileo*, and *Ulysses*. The current operating set of missions that are enabled by RPS are *Voyagers 1* and *2*, *Cassini*, *New Horizons*, and *Curiosity* (Figure 1).

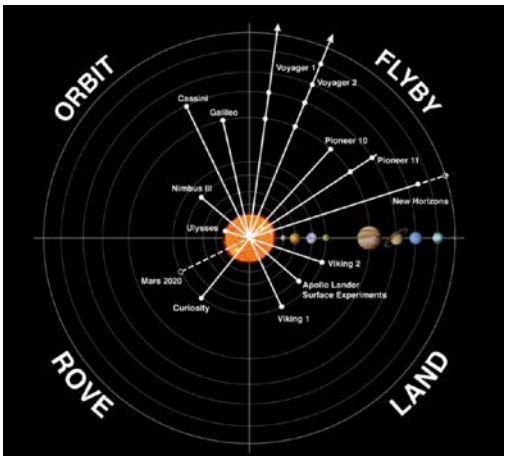

Figure 1: Past RPS

II. Radioisotope Power Systems Program Office

The RPS Program Office was formulated in July 2009 as a multi-center, multi-agency (with the Department of Energy) program whose purpose is to manage the National Aeronautics and Space Administration (NASA) Science Mission Directorate's (SMD) investments in RPS and their potential utilization in future missions. The majority of missions that could use RPS are formulated and implemented by the Planetary Science Division (PSD) within the SMD. The 2011 Strategic Plan Goal 2 is to "Expand scientific understanding of the Earth and universe in which we live." Out of the four Sub-Goals, Sub-Goal 2.3 directly applies to the RPS Program, which is to "Ascertain the content, origin, and evolution of the solar system and the potential for life elsewhere." [3] The RPS Program directly supports this agency need as further defined in the Solar System Exploration Roadmap.[4] The RPS Program is responsible for maintaining a capability to acquire future systems through strategic investment in unique competencies that may be needed by future missions. One of the key Program requirements is to support potential users of RPS with expertise and explanation of RPS capabilities to allow these users to understand and evaluate the use of RPS for their proposed applications.

III. Mission Analysis

Mission Analysis resides in the Program Planning and Assessment (PP&A) element within the RPS Program Office that is responsible for developing and maintaining the implementation strategy of the RPS Program to meet the requirements and expectations of planetary science stakeholders. This cross cutting area ensures that the flow of research and technology development is responsive to the future needs of missions by performing mission studies that drive RPS-level capabilities and determine mission-imposed requirements and subsequent system studies that drive generator design requirements. PP&A identifies the tactical approach that the program uses to implement the requirements across the various program and project areas.

Mission Analysis is used to guide the RPS Program Manager and Program Executive at NASA headquarters in program investment that best serves the mission community. Mission analyses allow the Program to forecast and understand what mission scenarios would be enabled by a RPS and the mission science benefits that support the NASA Sub-Goal 2.3. Mission analyses also provide the identification of the top-level capabilities needed by an RPS and the impacts the RPS would have on the spacecraft. This information then is used to determine what system level analyses are required. System analyses are used to understand system level requirements and parameters and compare those needs to what is currently available. This process is used to recommend the need for new RPS

capabilities to enable missions with requirements beyond the performance parameters of the currently available RPS portfolio. Mission designs are also conducted for the purpose of broadening understanding of the potential applicability of RPS to the SMD in general.

Mission Analysis contributes to obtaining broader programmatic objectives by supporting the proper execution of the RPS Program strategy and implementation by leveraging the Agency's mission design investment across multiple centers, such as Glenn Research Center (GRC) Collaborative Modeling for Parametric Assessment of Space Systems (COMPASS), Jet Propulsion Laboratory (JPL) Team X and the Johns Hopkins University Applied Physics Laboratory (JHU-APL) Concurrent Engineering to conduct a variety of mission studies (Figure 2).

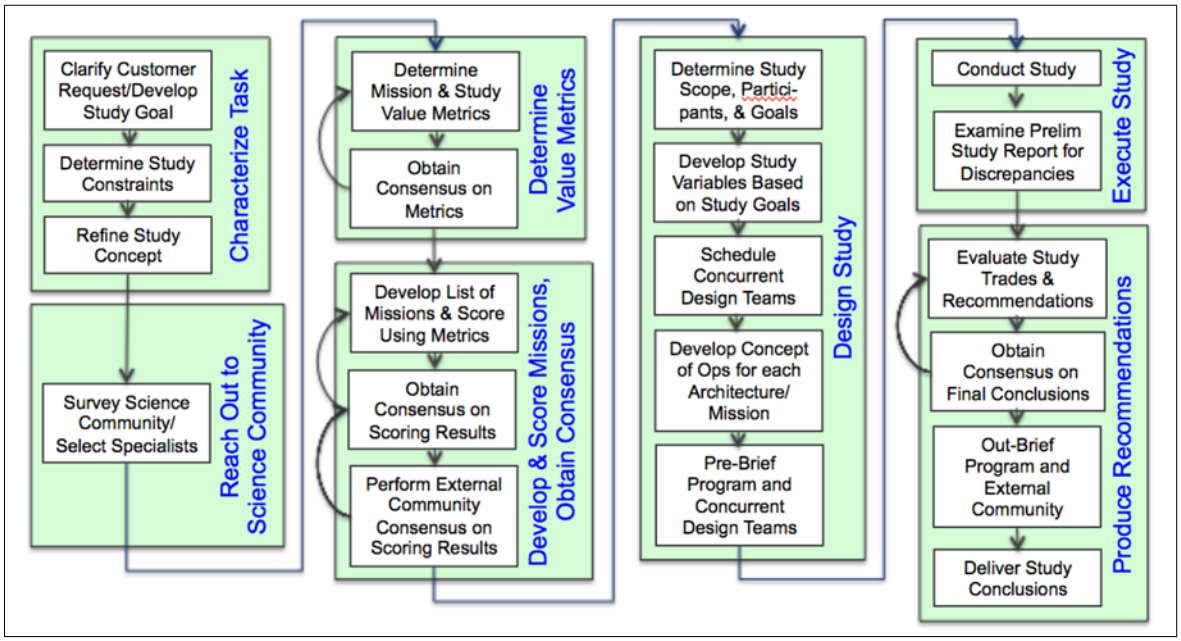

Figure 2: Mission Analysis Study Process

IV. Mission Concept Study for Small RPS

Given NASA's increasingly constrained budgets, scientists and mission designers are exploring ways to develop effective, affordable planetary missions that could be implemented at a fixed cost that includes spacecraft and science payload development, launch, operations, science data analysis and all relevant mission-specific technology development. In order to meet low-cost mission development challenges, it is essential to seek rideshare opportunities as a secondary payload to gain frequent space access and visit many destination targets. Such mission concepts require low mass, longer lifetimes, and innovative implementation in order to achieve high-value science. One of the RPS Program's primary responsibilities is to provide a suite of RPS capabilities to meet the range of current and potential future space science mission requirements. In order to meet these rising low-cost space exploration mission development demands, the RPS Program Office is exploring mission applications for small RPS (sRPS) that may enable deep space missions with lower power requirements but stricter mass and volume constraints. Thus, the RPS Program Office has asked the following questions of its Mission Analysis Team:

- Can Discovery-class science and a Discovery-class cost profile using multiple SmallSats, with mission duration of up to 14 years, be enabled by sRPS?
- Can mission concepts 'close' with one General Purpose Heat Source (GPHS) module?
- What are the mission drivers for sRPS-enabled mission power needs? Number of spacecraft? Number of instruments? Or number of objects to fly by?
- What are the mission concept parameters that are key trade attributes when using sRPS in a Discovery-class mission?
- What are the optimal qualities of sRPS that could meet the needs of sRPS-enabled missions?

In an attempt to address the RPS Program Office's challenging questions, the Mission Analysis team has recently studied a Centaur Flyby SmallSat Design Reference Mission (DRM), a concept to send four similar or identical SmallSats of about 100 kg each to at least two different Centaur objects. The Mission Analysis team and

GRC COMPASS Team executed this Centaur Flyby Mission Concept study with supporting science expertise from JHU-APL and JPL.

V. Notional Centaur Flyby Mission Concept

Low-cost, low-mass, and long-lived applications are being examined as a part of a wider study of standalone, piggy-backed, and landed missions that may not be feasible with available power options. A Centaur Flyby SmallSat mission concept was selected as a SmallSat DRM for the purpose of determining optimal qualities of sRPS that could meet the needs of standalone RPS-enabled missions.[5] The Centaur Flyby SmallSat mission is a concept to send four similar or identical SmallSats of about 100 kg to at least two different Centaur objects, with the study focusing primarily on Chiron. The DRM was selected as it provided a well-defined science mission that should remain relevant at a point when small RPS would become available. Additionally, this DRM allows for a breadth of architectures that distinguish science return as a function of varying mission parameters. Study constraints were: (1) standalone spacecraft enabled by sRPS, (2) low cost mission as a Discovery class cost profile with multiple SmallSats, (3) use of 1 GPHS module, (4) mission duration to be up to 14 years, (5) data return phase up to 1 year, and (6) launch date to be after 2020. Assumptions of the study were: (1) availability of RPS to be within 7 years from today, (2) 4 spacecraft each in 100 kg range, (3) same spacecraft configurations with same science instruments, (4) all spacecraft could be launched on the same launch vehicle, (5) use of small, 20-60 W_e, radioisotope power which would supply a reasonable power level for timely data return while batteries would supply additional power during science operations and data return communications periods, (6) secondary science instrument contributed, and (7) RPS systems assumed to be Government Furnished Equipment (GFE).

A. Why Centaur objects?

The Centaur objects have not been explored and are difficult to observe remotely due to distance and albedo (Figure 3). Centaurs exhibit diverse spectra and may be related to the Kuiper-Belt Objects (KBO) but are significantly more accessible and appropriate fly-by targets. The New Frontiers 2009 Announcement of Opportunity (AO) recommended a Centaur reconnaissance mission. [6] Chiron is one of several unique Centaurs with detected coma activity, indicating it has recently entered its current orbit having been perturbed from an orbit at a larger heliocentric distance. It is prime candidate as a possible KBO and a large Centaur object with ephemeris reasonably well known.

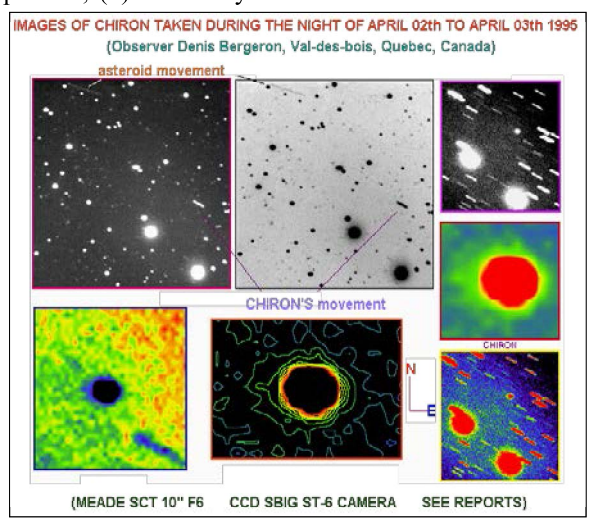

Figure 3: Images of Chiron

B. Specific Science Goals

A specific set of science goals were defined in order to demonstrate the science value and to develop an appropriate payload and determine power levels and operations concepts, which are key mission drivers. The science goals are to characterize the Centaur targets by determining:

- **Surface Morphology** via camera: maps of target and flyby closest approach images
- **Structure** via gravity science with two-way Doppler radio (using 2-way ranging through medium gain antenna to/from Deep Space Network (DSN)
- **Composition** via hyperspectral IR spectrometer as a contributed instrument: maps of target and flyby closest approach images

The concept payload consists of an imaging camera (has 2,048 x 2,048 pixel and 1.5º FOV, weighs 2.4 kg and requires 5 W power), based on MESSENGER MDIS Narrow Angle Camera (NAC)[7] heritage (Figure 4), and a spectrometer (has128 pixel pushbroom with 10 spectral bands and 0.014º FOV, weighs 4 kg and requires 12.5 W power) based on Marco Polo VIS-IR[8] heritage (Figure 5).

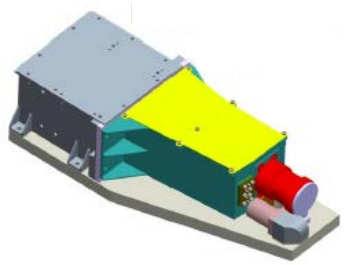

Figure 4: MDIS NAC

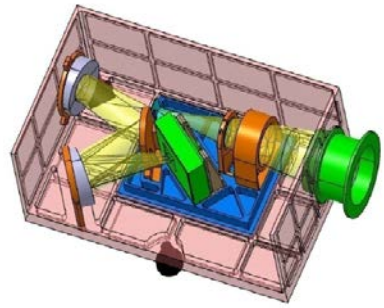

Figure 5: VIS-IR Spectrometer

C. Mission Design Concept

Selected mission scenario for the study was to send four identical SmallSats targeting two Centaur objects (two SmallSats to each object) since this scenario was suited for using the redundant spacecraft configurations, facilitating more angles for observations, allowing more time on target and obtaining better gravity science. Other considered mission scenarios were:

- Four identical SmallSats targeting four Centaur objects (one SmallSat to each object)
- Four SmallSats with two different payloads targeting two Centaur objects (one SmallSat of each payload to each object)
- Four SmallSats with four different payloads targeting one Centaur object

Trajectory analysis could not find a direct cruise to Chiron using solely conventional propulsion (C^3 ~ 100 km^2/s^2) under constraints of < 13 years cruise time (due to spacecraft and RPS lifetime) and ~5 km/s or lower flyby speed (based on surface mapping science requirements). Thus, trajectories using Jupiter flyby for gravity assist were developed. Depending on the specific Centaur target, the first cruise phase would last 1.5-2 years, and the second cruise phase (after the Jupiter flyby) would take another 8-10 years (Figure 6). Both cruise phases would be done in a low-power spin-stabilized mode.

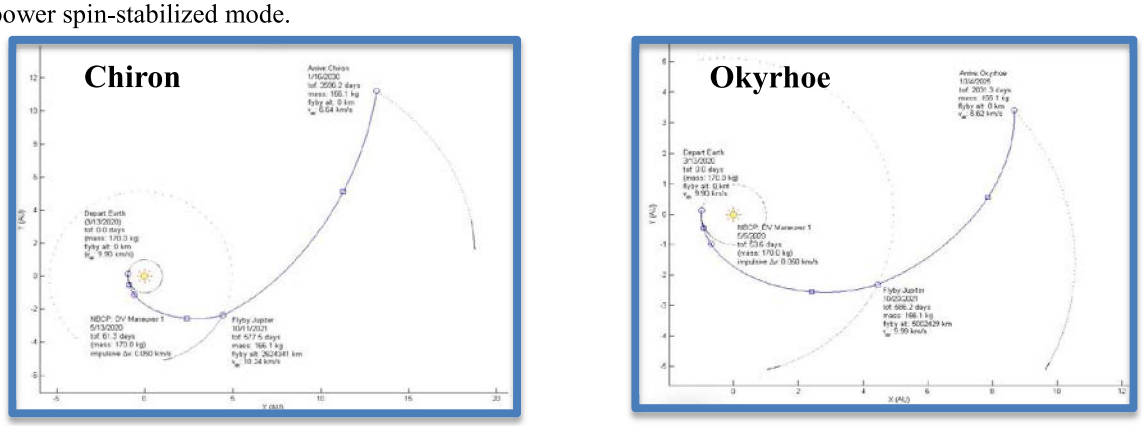

Figure 6: Trajectories to Flyby Two Different Centaur Bodies

Science phase operations are illustrated in Figure 7, and would begin when the target body could be resolved to 5 pixels. The phase design is that observations would be taken with the camera to better determine target ephemeris and rotation properties for optical navigation (OpNav). Maps would be taken of the target body with pictures taken every 30º of rotation, using the camera and spectrometer. In the flyby observation phase, the spacecraft would use an eight-hour DSN pass with the medium gain antenna to perform gravity science with two-way Doppler measurements. Simultaneously, the spacecraft would continue imaging using a scanning mirror. During the hour of closest approach, approximately 100 images would be taken with each instrument. Imaging would continue after closest approach until the body could no longer be resolved. Once imaging is complete, the science phase would be ended and the data return phase would begin, lasting ~3 months. Data return would be done alternating a low power mode to charge batteries with a high power mode for telecom.

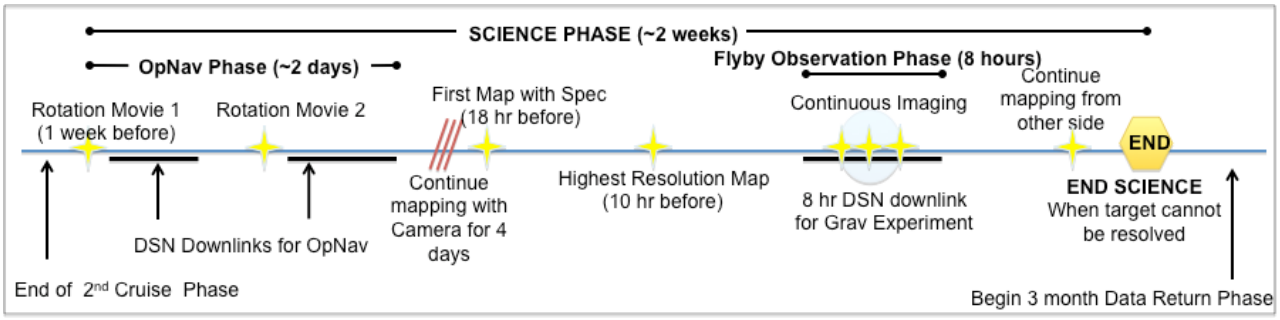

Figure 7: Science Phase Operations

VI. Notional Spacecraft

The GRC COMPASS Team converged on a feasible spacecraft and mission design: four ~170kg with ~60 W_e small RPS powered micro-spacecraft that could flyby Jupiter en route and then each perform a flyby at a different Centaur. The assumed characteristics of the small RPS power systems (See Figure 8 and 9 for the notional Small Stirling Radioisotope Generator (SRG) and Small Radioisotope Thermoelectric Generator (RTG) that were used for the study are described in Table 1.

Parameter	1-GPHS Small SRG	1-GPHS Small RTG	3-GPHS Small RTG
BOM Power	65 W	21 W	64 W
EOM Power (12 year mission)	57 W	16 W	48 W
Mass	18 kg	10 kg	20 kg
Dimensions	49 x39 x 38 cm	64 cm diameter (include fins) 17 cm height	64 cm diameter (include fins) 31 cm height
Cold-side Temp (BOM, 4K sink)	38 C	50 C	50 C
Voltage	28 +/- 6 V	5 +/- 1 V	28 +/- 8 V
Degradation	1.16%/year	2.5%/year	2.5%/year
Efficiency (BOM)	26%	8.5%	8.5%

- BOM values are at Beginning of Mission: at launch after 3 years in storage. EOM values are at End of Mission after an additional 12 years of operations.
- Small SRG: One Advanced Stirling radioisotope generator (ASRG) engine with a passive balancer and a two-card controller. The controller is included in the mass above, but not in the volume or diagram. Attributes are based on ASRG current best estimate.
- Small RTG: Follows Multi-Mission Radioisotope Thermoelectric Generator (MMRTG) design but with 1 or 3 GPHS modules and advanced PbTe/TAGS/BiTe thermocouples. Estimated 6 parallel strings for average 28 V power. Attributes are estimated requirements.
- Systems assumed qualified for 17-year lifetime, including 3 years of storage.

Table 1: Notional Small RPS Power System Specifications

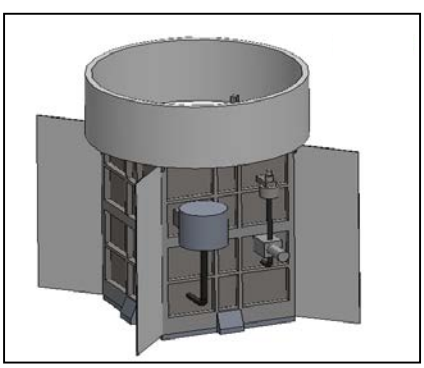

Figure 8: Small SRG Concept

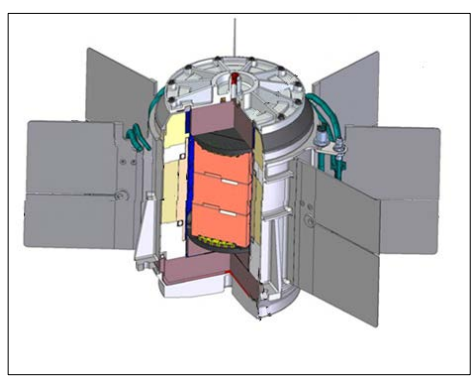

Figure 9: 3-GPHS RTG Concept

A. Notional Spacecraft Details

Spacecraft characteristics are detailed below via notional diagrams with spacecraft interior components (Figure 10), dimensions (Figure 11), and a Mass Equipment List (Figure 12) and Power Equipment List (Figure 13).

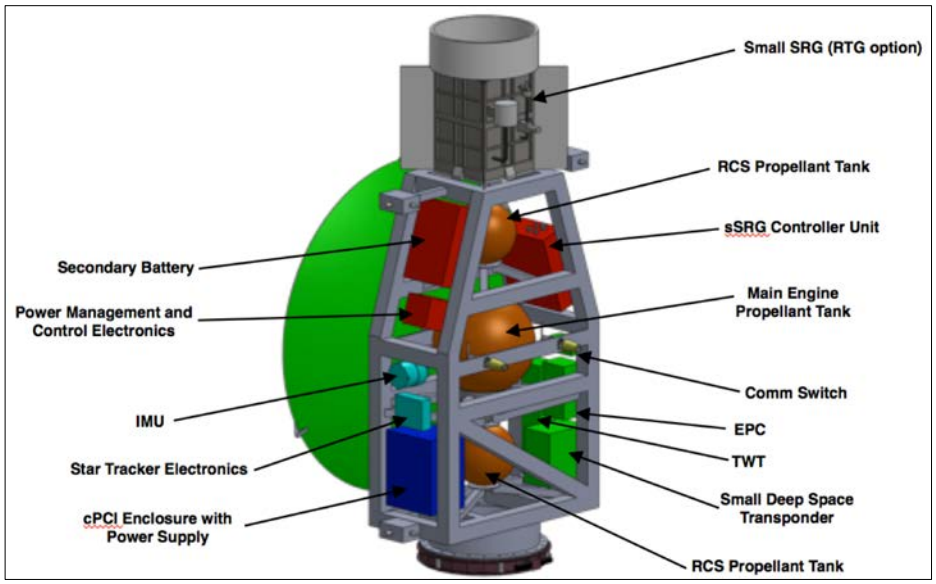

Figure 10: Notional Diagram with Interior Components

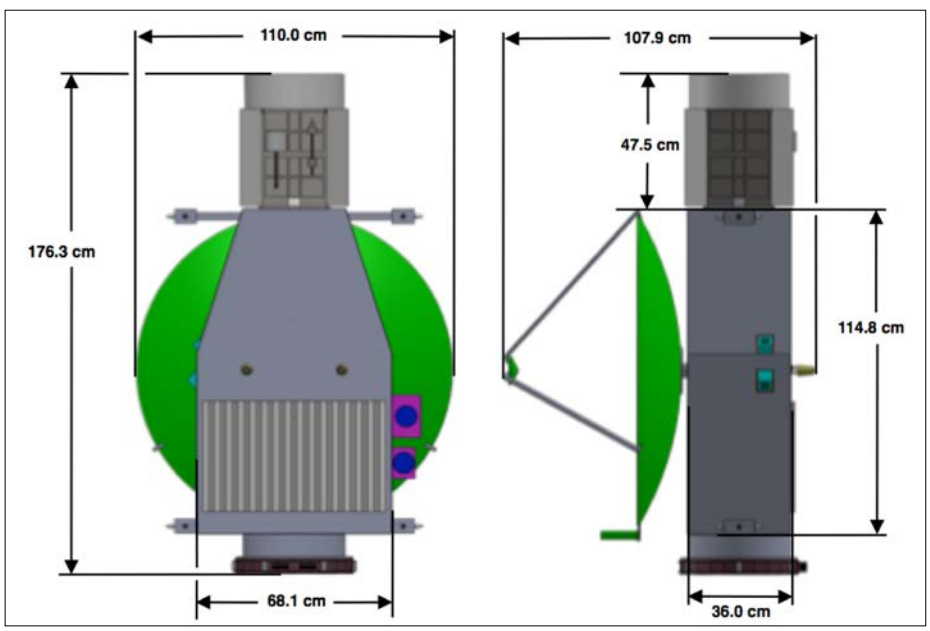

Figure 11: Notional Spacecraft Dimensions

SmallSat MEL				
Main Subsystems	Basic Mass (kg)	Growth (kg)	Predicted Mass (kg)	Aggregate Growth (%)
RPS SmallSat	261.36	40.25	301.61	
Microsat Bus	139.31	18.28	157.58	13%
Science Payload	7.40	2.10	9.50	28%
Attitude Determination and Control	3.61	0.11	3.71	3%
Command & Data Handling	13.80	3.73	17.53	27%
Communications and Tracking	10.05	2.48	12.53	25%
Electrical Power Subsystem	40.18	6.03	46.20	15%
Thermal Control (Non-Propellant)	12.94	1.94	14.89	15%
Propulsion (Chemical Hardware)	12.75	0.53	13.29	4%
Propellant (Chemical)	12.73		12.73	0%
Structures and Mechanisms	25.85	1.36	27.21	5%
Estimated Spacecraft Dry Mass (no prop,consum)	126.58	18.28	144.85	14%
Estimated Spacecraft Wet Mass	139.31	18.28	157.58	
System Level Growth Calculations				Total Growth
Dry Mass Desired System Level Growth	126.58	37.97	164.55	30%
Additional Growth (carried at system level)		19.69		16%
Total Wet Mass with Growth	139.31	37.97	177.28	

Figure 12: Notional Spacecraft Mass Equipment List (MEL)

Number	Case #1 GPHS Microsat CD-2013-92	(W)	(W)	(W)	(W)	(W)	(W)	(W)	(W)	(W)	(W)
	Power Mode Name	Prelaunch	Launch	Checkout	Cruise	MCC	Initial Science Ops	Flyby Imaging	Flyby Gravity	Post Flyby Science	Comm Data Return
	Power Mode duration	5 min	3 min	1 week	10 years	5 min	1 week	1 hour	12 hours	1 week	8 months
06	GHPS MicroSpacecraft	8	8	112	36	71	57	120	97	93	78
06.1	Microsat Bus	8	8	112	36	71	57	120	97	93	78
06.1.1	Science Payload	0	0	0	0	0	6	28	5	0	0
06.1.2	Attitude Determination and Control	0	0	16	16	16	16	16	16	16	16
06.1.3	Command & Data Handling	5	5	24	10	24	24	24	24	24	11
06.1.4	Communications and Tracking	0	0	48	7	7	7	48	48	48	48
06.1.5	Electrical Power Subsystem	3	3	3	3	3	3	3	3	3	3
06.1.6	Thermal Control (Non-Propellant)	0	0	0	0	0	0	0	0	0	0
06.1.7	Propulsion (Chemical Hardware)	0	0	21	0	21	1	1	0	1	0
06.1.8	Propellant (Chemical)	0	0	0	0	0	0	0	0	0	0
06.1.9	Propulsion (EP Hardware)	0	0	0	0	0	0	0	0	0	0
06.1.10	Propellant (EP)	0	0	0	0	0	0	0	0	0	0
06.1.11	Structures and Mechanisms	0	0	0	0	0	0	0	0	0	0
06.2	Adaptor	0	0	0	0	0	0	0	0	0	0
06.2.11	Structures and Mechanisms	0	0	0	0	0	0	0	0	0	0
	System Total	8	8	112	36	71	57	120	97	93	78
	+30% on Bus system	10	10	146	47	92	74	156	126	120	102
	+5% on EP system	0	0	0	0	0	0	0	0	0	0
	Total System power with growth	10	10	146	47	92	74	156	126	120	102

Figure 13: Notional Spacecraft Power Equipment List (PEL)

B. Notional Mission Cost Summary

Following key cost assumptions for the study were used:

- All costs are in FY13 $M
- Use Discovery 12 cost guidelines: Mission managed cost cap is 447 FY13 $M (425 FY10 $M), cost of standard Launch Vehicles not included in cap, RPS flight H/W is GFE, RPS Launch Approval cost is $20M and phase A-E reserves at 25% (We used reserves of 30%)
- Development (DDT&E) and Flight Hardware estimates represent prime contractor cost with fee
- Four spacecraft are of identical design with same science package: camera and mirror linear actuator costs included and spectrometers are assumed to be contributed
- Estimates do not include any cost for technology development lower than Technology Readiness Level (TRL) 6
- System Integration costs calculated using wraps as a planetary mission
- Flight software costs are included in development cost
- Secondary science instrument contributed

COMPASS point design put notional mission costs within reach of the Discovery cost cap by identifying several cost reduction options with potential to meet cost cap that can be explored in further detail.

VII. Conclusion

Preliminary study results show that a SmallSat using a small RPS for deep space destinations could potentially fit into a Discovery class mission cost cap and perform New Frontiers class science with a timely return of data. The mission is feasible using either the small SRG or small RTG; however, the EOM power is lower for the small RTG. Because the small SRG system has greater excess power, a data return of 4 hours per day is possible rather than 1

hour per day as with the small RTG, which can have an impact on a long-duration mission[9]. There are no other fundamental impacts to the mission design between these two RPS other than a slight increase in mass and the use of three GPHS bricks (compared to a single GPHS for the SRG) with the small RTG. Both missions use the same payload and science operations; thus, no trades were performed on science value. Table 2 summarizes the studied mission concept in high level.

Mission	Four 170 kg RPS powered SmallSats would flyby Jupiter then flyby two Centaur objects (two SmallSats flyby each object). Flybys would occur 4-12 years after launch at 4-10 km/s velocity.
Mission Duration	Up to 14 years
Launcher	Atlas 431 with Star 48BV to C^3 97 km^2/s^2
Science	Narrow Angle Camera, Gravity Science, Spectrometer; 3 Gb of data (~200 10m/pixel resolution images from NAC per spacecraft, ~148 200m/pixel resolution images from the spectrometer per spacecraft, gravity science estimates mass of Centaur to 1% accuracy)
Spacecraft	
Power	~60W provided by RPS, 9.3 kg Li-ion battery.
Communications	~ 1,350 bps data rate with X-band, 1 meter dish
AD&CS	IMU, Sun sensors, Star trackers, N_2 Cold Gas, 3 axis RCS pointing to 0.5 degree accuracy
Propulsion	N_2 cold gas for RCS and Hydrazine for mid-course corrections
C&DH	Microsat class processor (LEON)
Mechanical	Star 48 final burn, pointing mirror for science
Cost	Discovery Class assuming RPS systems are Government Furnished Equipment as in 2010 Discovery Announcement of Opportunity

Table 2: Mission Concept Highlights

The driving power case is the cruise/hibernation mode at ~40 W for 10 to 12 years, with science instruments off and a low-power mode for the Command and Data Handling (C&DH). Hibernation mode must use less power than that generated by the RPS to allow for recharging of the battery. The higher power modes, science operations and during shorter telecom, are then handled by drawing from the 9kg Li-ion battery.

The mission was also studied with a 1 GPHS module small RTG producing 21 W, but power usage was not low enough to recharge even after turning off the IMU and further reducing the C&DH power. To be feasible with a 1 GPHS module small RTG, the mission would need to take on more risk by turning off the star tracker, computer, and/or receiver, or by using lower-power components. The use of 3 GPHS module small RTG configuration meets the mission's power requirements.

The study put mission costs within reach of the Discovery cost cap, and identified several cost reduction options with potential to meet the cost cap that could be explored in further detail. Key cost considerations were: commonality of hardware and science instruments among identical spacecraft; multiple spacecraft sharing the costs of the Launch Approval Engineering Process; and the assumption that a secondary science instrument was contributed. The RPS Program is confident that RPS could meet the needs of future low-cost small spacecraft mission concept development.

Appendix A

Acronym List

AO	Announcement of Opportunity
ASRG	Advanced Stirling Radioisotope Generator
BOM	Beginning of Mission
C&DH	Command and Data Handling
COMPASS	Collaborative Modeling for Parametric Assessment of Space Systems
DRM	Design Reference Mission
DSN	Deep Space Network
GFE	Government Furnished Equipment
GPHS	General Purpose Heat Source
GRC	Glen Research Center (NASA)
JHU-APL	Johns Hopkins University Applied Physics Laboratory (NASA)
KBO	Kuiper-Belt Objects
JPL	Jet Propulsion Laboratory (NASA)
MMRTG	Multi-Mission Radioisotope Thermoelectric Generator
NASA	National Aeronautics and Space Administration
OpNav	Optical Navigation
PDS	Planetary Science Division
PP&A	Program Planning and Assessment
RTG	Radioisotope Thermoelectric Generator
SMD	Science Mission Directorate (NASA HQ)
SRG	Stirling Radioisotope Generator
sRPS	small RPS
TRL	Technology Readiness Level

Acknowledgments

This research was carried out at the Glenn Research Space Center and Jet Propulsion Laboratory, California Institute of Technology, under a contract with the National Aeronautics and Space Administration.

Special thanks to Dr. Andrew Rivkin from the Johns Hopkins University Applied Physics Laboratory, Dr. Julie Castillo from the Jet Propulsion Laboratory and COMPASS Team from the Glenn Research Center. Members of the COMPASS Team were: Melissa Mcguire (System Integration, MEL), Jeff Woytach (PEL, CONOPs, Launch Vehicle), Waldy Sjauw (Mission), Mike Martini (GN&C), James Fittje (Propulsion), John Gyekenyesi (Structures), Tony Colozza (Environmental), Paul Schmitz (Power), Glenn Williams (C&DH/Software), Joe Warner (Communications), Tom Packard (Configuration) and Jon Drexler (Cost).

The cost information contained in this document is of a budgetary and planning nature and is intended for informational purposes only. It does not constitute a commitment on the part of NASA, JPL and/or Caltech.

References

[1] National Space Policy of the United States of America*, June 28, 2010,* Page 8

[2] NRC 'RPS: An Imperative for Maintaining U.S. Leadership in Space Exploration: http://www.nap.edu/catalog.php?record id=12653

[3] "2011 NASA Strategic Plan," National Aeronautics and Space Administration Headquarters, NP-2011-01-699-HQ, Washington DC, Feb. 2011, p. 17

[4] The Solar System Exploration Roadmap is avail at: http://solarsystem.nasa.gov/multimedia/downloads/SSE_RoadMap_2006_Report_FC-A_med.pdf

[5] Bairstow, B., et al.; " A Low-Cost Small Radioisotope Power System Centaur Flyby Small Sat Mission Concept" in the Low Cost Planetary Missions-10, Pasadena, CA, June 18-20, 2013

[6] http://nspires.nasaprs.com/external/viewrepositorydocument/cmdocumentid=182696/solicitationId=%7BCFE00B4A-2447-7325-7004-7C3B04ED5738%7D/viewSolicitationDocument=1/New_Frontiers_AO_admin1.pdf

[7] http://ssed.gsfc.nasa.gov/IPM/PDF/Revised_Orals/Chabot-1062.pdf; http://messenger.jhuapl.edu/instruments/MDIS.html
[8] sci.esa.int/science-e/www/object/doc.cfm?fobjectid=45193
[9] Cataldo, R.L., et el.; "Power System Overview for the Small RPS Centaur Flyby and the Mars Polar Hard Lander NASA COMPASS Studies" in the 2014 Nuclear and Emerging Technology for Space (NETS-2014) Topical Meeting, at the Infinity Science Center, a NASA visitor Center in Mississippi, February 24 – 26, 2014