The Double Flybys of the Cassini Mission: Navigation Challenges and Lessons Learned

Sean Wagner* and Brent Buffington†

Jet Propulsion Laboratory, California Institute of Technology, Pasadena, CA, 91109, USA

Since 2004, the Cassini spacecraft has flown by Titan and other Saturn moons numerous times, successfully accomplishing its 100th targeted encounter of Titan in March 2014. The navigation of Cassini is challenging, even more so with "double flybys," two encounters separated by at most a few days. Because of this tight spacing, there is not enough time for a maneuver in between. Additionally, maneuvers prior to a double flyby only target one of the two encounters. This paper discusses the challenges faced by the Cassini Navigation Team with each double flyby, as well as lessons learned during operational support of each dual encounter. The strengths and weaknesses of the targeting strategies considered for each double flyby are also detailed, by comparing downstream ΔV costs and changes to the non-targeted flyby conditions.

I. Introduction

SINCE beginning a Saturn tour in July 2004, the Cassini spacecraft has been successfully navigated to flybys of Titan and other Saturn moons numerous times, accomplishing its 100th targeted encounter of Titan in March 2014. Targeted encounters are achieved through propulsive maneuvers which are performed to meet flyby aimpoint and timing conditions. To accurately determine the Cassini spacecraft's orbit and to design and perform maneuvers, an adequate amount of time is necessary between each targeted flyby. During the four-year prime tour of Saturn and its moons and the two extensions to the tour, the Equinox and Solstice Missions, the nominal minimum time between encounters was set to 16 days.[1] At various times from 2005 through 2011, there were exceptions to this rule mainly in the form of "double flybys," when Cassini would target two encounters separated by at most a few days. Double flybys are highly valuable for their science return, but operationally challenging as there is insufficient time to design, uplink, and execute a maneuver in between the two encounters. Instead, maneuvers that precede a double flyby can only directly target one of the two encounters. Hence, careful attention is given to the effects that these maneuvers and the targeted encounter have on the non-targeted flyby.

Six of the 7 double flybys that have occurred in the mission involved a Titan encounter and a close flyby of either Dione, Enceladus, or Rhea. A Titan aimpoint miss of a few kilometers could manifest into a large downstream ΔV penalty. Even if Titan is targeted instead of the icy satellite, the uncertainty in the icy satellite's ephemeris could result in a significant miss at Titan. This paper discusses these and other challenges faced by the Cassini Navigation Team with each double flyby in the Saturn tour, as well as lessons learned during operational support of each dual encounter. The strengths and weaknesses of the targeting strategies considered for each double flyby are also detailed, by comparing downstream ΔV costs and changes to the non-targeted flyby conditions such as altitude and timing.

*Corresponding Author; *Mailing Address*: Jet Propulsion Laboratory, Mail Stop 230-205, 4800 Oak Grove Drive, Pasadena, CA 91109-8099; *Tel*: (818) 393-5972; *Fax*: (818) 393-4215; *E-mail address*: Sean.V.Wagner@jpl.nasa.gov

†Authors are members of the Mission Design and Navigation Section, Jet Propulsion Laboratory, California Institute of Technology, Pasadena, CA 91109, USA

II. Cassini Tour Navigation

About 98% of the total ΔV required for the Cassini tour comes from the substantial gravity assists provided by each Titan encounter. For example, a Titan flyby at an altitude of 1,000 km and a V_∞ of 5.5 km/s supplies about 840 m/s of ΔV to Cassini; lower-altitude flybys impart even more. Orbit Trim Maneuvers (OTMs) are accomplished through the use of two independent propulsion systems, the bi-propellant Main Engine Assembly (MEA) for performing large burns and the Reaction Control System (RCS) thrusters for small burns (see Appendix A for more on Cassini maneuver executions). Encounters in which the satellite-relative aimpoints are controlled with OTMs are referred to as "targeted" flybys. These include all Titan flybys that are less than 12,000 km, with a few exceptions[a], and icy moon encounters under 2000 km. Conversely, flybys with no explicitly defined flyby parameters, and are not controlled via OTMs, are referred to as "non-targeted" flybys. Non-targeted flybys are important for global satellite imaging, and typically have periapsis altitudes greater than that defined for targeted flybys (usually under 100,000 km).[2]

The nominal navigation strategy consists of scheduling three OTMs between each targeted encounter, as illustrated in Figure 1: a cleanup maneuver, about three days after an encounter, removes the orbital dispersion errors incurred by inaccuracies in the flyby conditions; a shaping maneuver, normally located near apoapsis, targets the encounter conditions; and an approach maneuver, about three days before an encounter, refines the orbit before an encounter, if necessary. Typically the first two maneuvers are deterministic: their executions are usually required, and they are normally optimized together in a chained two-impulse optimization strategy, which minimizes total deterministic ΔV across several encounters while controlling asymptote errors without altering downstream flyby aimpoints after each encounter.[3] On the other hand, the approach maneuver is typically statistical: its execution depends on the accumulation of random error. The maneuvers are targeted to the upcoming encounter's three B-plane[4] flyby conditions: the spatial components $\mathbf{B} \cdot \mathbf{R}$ and $\mathbf{B} \cdot \mathbf{T}$, and the time of flight (see Appendix B for an explanation of the B-plane). These targets were determined during the mission design phase, and are collectively known as the reference trajectory[b].

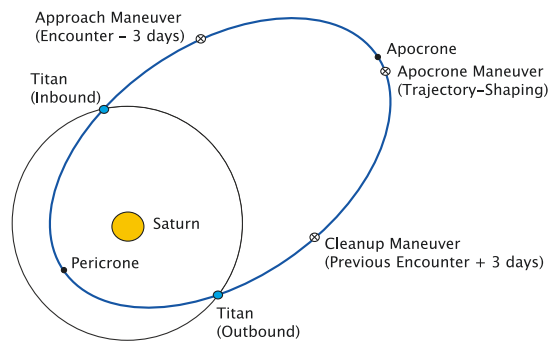

Figure 1: Three-OTM-Per-Flyby Strategy for Saturn Tour. Outbound-to-inbound leg shown.

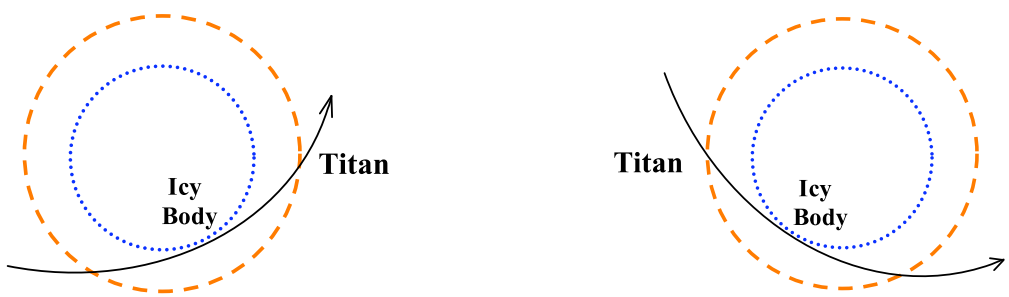

(a) Outbound Titan Double Flyby

(b) Inbound Titan Double Flyby

Figure 2: Double Flyby Geometry

In the case of double flybys, only one of the two encounters is targeted via OTMs because of the insufficient time to design and execute a maneuver in between the flybys. As a result, only one of the two bodies can be targeted via OTMs that precede the double flyby. Figure 2 illustrates a Titan and icy satellite double encounter, for both inbound and outbound flyby[c] geometries.

[a] Titan-C on 14-Jan-2005 (altitude = 60,000 km), Titan-80 on 02-Jan-2012 (altitude = 29,415 km), and Titan-81 on 16-Jan-2012 (altitude = 31,131 km)

[b] The reference trajectory provides predetermined maneuver locations and flyby targets according to science sequence planning and objectives.

[c] An outbound flyby occurs after pericrone (Saturn periapsis). An inbound encounter occurs before pericrone.

III. Overview of Double Flybys

Table 1: Double Flybys of the Cassini Mission

Encounter	In/ Out	Reference Trajectory (Non-tgt. flyby values from last control point)*			Reconstructed Traj. (Δ w.r.t. Ref. Traj.)		3D Position Error‡		Targeting OTMs
Targeted — bold *Non-tgt. — italics*		Time of Closest Approach (ET SCET)	Altitude† (km)	Flyby ΔV (m/s)	ΔTCA (sec)	Δ Alt.† (km)	(km)	(σ)	(**MEA**, RCS, or *cancelled*)¶
— Rev 3 —		*— Prime Mission (July 2004 – September 2008)—*							
Titan-3 (T3)	In	15-Feb-2005 06:58:57.0	1576.6	724.7	0.32	2.42	4.6	1.5	**011**, **012**, 013
Enceladus (3En)§	Out	17-Feb-2005 03:31:20.5	1167.2	1.5	12.44	96.24			
— Rev 15 —									
Tethys (15Te)§	Out	24-Sep-2005 02:43:24.6	1484.1	4.5	−0.52	12.40			*032*, **033**, *034*
Hyperion-1 (H1)	Out	26-Sep-2005 02:25:50.0	510.0	0.2	2.92	−22.49	5.0	2.0	
— Rev 49 —									
Rhea (49Rh)§	Out	30-Aug-2007 01:20:07.1	5721.4	7.1	−0.32	4.26			*122*, **123 BU**,
Titan-35 (T35)	Out	31-Aug-2007 06:33:39.0	3326.5	500.0	1.80	−2.26	2.8	1.1	*124*
— Rev 91 —		*— Equinox Mission (September 2008 – September 2010) —*							
Enceladus-6 (E6)	In	31-Oct-2008 17:15:56.6	200.3	1.9	0.93	−27.80	4.2	3.6	**167**, **168**, 169
Titan-46 (T46)	Out	03-Nov-2008 17:36:28.0	1100.0	777.4	−0.13	5.20	9.7	4.0	
— Rev 129 —									
Titan-67 (T67)	In	05-Apr-2010 15:51:59.8	7461.9	315.9	15.78	−24.38	0.9	1.4	*239*, **240**, 241
Dione-2 (D2)	In	07-Apr-2010 05:17:17.0	500.0	16.5	0.01	6.54	7.0	3.4	
— Rev 131 —									
Enceladus-10 (E10)	In	18-May-2010 06:05:45.4	438.9	3.2	0.33	2.65	1.4	2.0	**245**, **246**, *247*
Titan-68 (T68)	Out	20-May-2010 03:25:26.0	1400.0	766.7	0.28	−2.36	2.1	0.8	
— Rev 158 —		*— Solstice Mission (September 2010 – September 2017) —*							
Dione-3 (D3)	Out	12-Dec-2011 09:40:29.2	99.7	25.4	0.64	−1.96	2.8	3.0	**299**, **300**,
Titan-79 (T79)	Out	13-Dec-2011 20:12:30.0	3585.8	506.0	0.81	2.77	10.8	4.2	300a, 301

* If approach maneuver performed, last control point from approach maneuver design. If approach maneuver cancelled, last control point from OD solution for approach maneuver design.

† Flyby altitudes were not explicitly targeted in maneuver designs. Reported altitudes are relative to a sphere.

‡ 3-dimensional errors (2-D B-plane error combined with down-track error).

§ Non-targeted flyby naming convention: Orbit revolution number (incremented at apoapsis) and first two letters of satellite.

¶ Main engine burns (MEA) typically ≥ 0.25 m/s and RCS maneuvers < 0.25 m/s.

A total of seven double flybys were accomplished in the Cassini Mission and are listed in Table 1. Six of the 7 dual flybys involved a Titan encounter and a close flyby of either Dione, Enceladus, or Rhea. For each encounter, the table includes the time of closest approach (TCA), flyby altitude, and flyby ΔV imparted to spacecraft, as defined by the reference trajectory; whether the flyby is inbound or outbound, the differences between the orbit determination (OD) reconstructed values for TCA and altitude and the reference trajectory values, the 3-dimensional position flyby errors, and the list of planned OTMs for targeting the double flyby (also indicating whether performed via MEA or RCS or cancelled). Two encounters comprise a double flyby if all of the following conditions are met:

1. Inadequate time to design and implement a maneuver in between the two flybys (∼3 days or less)
2. Both flyby altitudes or ΔVs imparted by flybys impact maneuver designs:
   - For Titan, periapsis altitudes are generally less than 10,000 km
   - For the icy satellites, periapsis altitudes are generally under 2,000 km
   - Flyby ΔVs imparted are greater than ∼2 m/s
3. A large error in the first encounter would significantly alter the second flyby's geometry, resulting in at least one of the following:
   - Degraded science at the second flyby
   - Increased risk of impact at second flyby

There were three double flybys during the four-year Prime Mission. The first double flyby comprised of a targeted Titan-3 (T3) and a non-targeted close Enceladus flyby (3En) during the first year of the tour. Following two days after the T3 encounter on February 15, 2005, the non-targeted Enceladus flyby, also informally known as Enceladus-0 (E0), was the first close flyby of this icy satellite in the mission. The radio-metric data before and after this encounter enabled an accurate determination of Enceladus' mass.[5] The feasibility of double flybys from a navigation stand-point was demonstrated with the successful Tethys (15Te)/Hyperion-1 dual encounter, which paved the way for the four Titan/icy satellite double flybys of the Equinox and Solstice Missions.[2] This important double flyby, as well as the four double flybys of the extended missions, will be discussed in the next sections. Finally, the Rhea (49Rh)/Titan-35 (T35) double flyby was achieved in August 2007. The non-targeted close Rhea flyby and the targeted T35 encounter were used to set up the Iapetus-1 (I1) encounter on September 10, 2007, the first and only targeted flyby of Saturn's moon Iapetus.[6]

IV. Feasibility of Double Flybys: Tethys (15Te)/Hyperion-1 (September 2005)

A non-targeted Tethys flyby (15Te) at an altitude of 29,800 km was scheduled on September 24, 2005, two days prior to a 1010 km targeted Hyperion flyby, designated Hyperion-1 (H1), the only Hyperion flyby of the entire mission. While searching for low ΔV cost trajectory options to reduce the September 23, 2005 E-ring crossing impact probability, the most hazardous ring crossing in the Prime Mission, an opportunity to lower the flyby altitude of the Tethys flyby was unveiled. With the 050505 reference trajectory update, the Tethys flyby was lowered to 1500 km, the closest Cassini would fly by Tethys during the entire mission. Due to trajectory deviations caused by the tweak in the Tethys flyby, the targeted H1 flyby was lowered to 510 km to save ΔV. The increase in the predicted B-plane and down-track uncertainties resulting from lowering the 15Te flyby, which also included execution errors following a large main engine burn (OTM-033), did not preclude meeting the pointing requirements at the Hyperion flyby. Thus, the navigational capability to fly a 1500 km, non-targeted 15Te flyby was proven. Through the implementation of various trajectory modifications and constraints, it was shown that a double flyby of Tethys and Hyperion was navigationally feasible in the Prime Mission,[2] leading to the inclusion of double flybys in the extended missions.

Table 2: 15Te/H1 Maneuvers (OTMs 032–034)

OTM No.	Orbit Location	Maneuver Time (UTC SCET)	True Anomaly (deg)	Central Angle (deg)	Ref. ΔV (m/s)	Predicted ΔV Statistics Mean (m/s)	1-σ (m/s)	90% (m/s)	Design ΔV (m/s)	Recon. ΔV (m/s)	Burn Type
032	T7+3d	10-Sep-2005 17:09	167.47	344.42	0.007	2.580	1.861	5.094	... *CANCELLED* ...		
033	∼apo	19-Sep-2005 16:40	−163.32	315.23	27.905	27.823	0.646	28.679	27.910	27.930	MEA
034	H1−3d	23-Sep-2005 07:45	−118.10	269.72	—	0.407	0.228	0.718	... *CANCELLED* ...		
				ΔV totals	**27.912**	**30.810**	**2.003**	**33.471**	**27.910**	**27.930**	
Targeting: OTM-033 ⇒ H1										**Navigation Cost = 0.018**	

Following an accurate Titan encounter on September 7, 2005, OTM-032 was cancelled and OTM-033 alone targeted the H1 flyby (see Table 2). OTM-033, a large main engine maneuver of ≈28 m/s, was performed six days before the H1 encounter on September 19, 2005 and was used to setup both the H1 and Dione-1 (D1) encounters, while achieving the non-targeted Tethys flyby.[7] To meet the H1 pointing requirements, tracking data up to 17 hours prior to the execution time of OTM-034 was included in the OD delivery. Although OTM-034 was cancelled, this OD solution was used to update the instrument pointing vectors for science observations of Hyperion. Prior to the 15Te/H1 double flyby, optical navigation data of the satellites and several close encounters with Titan and Enceladus had improved the Hyperion and Tethys ephemerides significantly to approximately 5 km and 6 km (1-σ), respectively. The achieved Tethys flyby altitude was 1496.7 km, 12.4 km higher than predicted at the time of the OTM-034 design. This change in altitude is mainly due to the Tethys ephemeris prediction error of 18 km (3-σ), mainly in the down-track direction. This Tethys flyby error caused the 5 km (2-σ) miss from the prediction of the OTM-34 OD solution at the Hyperion flyby. The Hyperion satellite ephemeris change was small ($<$ 2 km) after the encounter. The achieved Hyperion flyby altitude was 487.5 km, 22.5 km lower than the OTM-033 target value of 510.0 km. This flyby also confirmed Hyperion's previously estimated mass.[8,9]

V. The Double Flybys of the Extended Missions

The success of the Tethys (15Te)/Hyperion-1 double flyby, comprised of a low-altitude Tethys flyby and a targeted encounter of Hyperion[2,8] in September 2005 during the Cassini Prime Mission set the stage for the four Titan and icy satellite double flybys that would follow in the two extended missions: Enceladus-6/Titan-46 (October-November 2008), the first of three double flybys of Titan and an icy satellite in the Cassini Equinox Mission; Titan-67/Dione-2 (April 2010), the first of two nearly back-to-back double flybys near the end of the Equinox Mission; Enceladus-10/Titan-68 (May 2010), the last double flyby in the Equinox Mission, only one month after the prior double flyby; and Dione-3/Titan-79 (December 2011), the sole double flyby of the Cassini Solstice Mission and the last planned for the mission.[1,10]

A. Enceladus-6/Titan-46 (October–November 2008)

The inbound Enceladus-6 (E6) encounter on October 31, 2008, at an altitude of 200 km, was made three days prior to the outbound Titan-46 (T46) flyby on November 3, 2008, at an altitude of 1100 km. The E6/T46 double flyby, the first of three double flybys in the Cassini Equinox Mission reported by Cassini Navigation in Reference 11, had the added complexity of being a quasi pi-transfer between the two encounters, with E6 in the proximity of pericrone and T46 near apocrone. Early in the design process the decision was made to target the second of the two encounters, T46, in order to lower the projected ΔV cost. The trajectory leading to the double flyby was marked by the sensitivities of the first two targeting maneuvers, OTMs 167 and 168, and the sub-par performance of OTM-169, the final approach maneuver to E6/T46.

Table 3: E6/T46 Maneuvers (OTMs 167–169)

OTM No.	Orbit Location	Maneuver Time (UTC SCET)	True Anomaly (deg)	Central Angle (deg)	Ref. ΔV (m/s)	Predicted ΔV Statistics Mean (m/s)	1-σ (m/s)	90% (m/s)	Design ΔV (m/s)	Recon. ΔV (m/s)	Burn Type
167	E5+3d	12-Oct-2008 23:51	173.54	1077.52	3.119	3.313	0.203	3.603	3.340	3.337	MEA
168	∼per	17-Oct-2008 09:10	65.14	826.09	7.144	7.189	0.101	7.316	6.993	6.988	MEA
169	T46−5d	29-Oct-2008 16:37	−156.88	328.14	—	0.133	0.098	0.273	0.232	0.225	RCS
				ΔV totals	**10.263**	**10.635**	**0.253**	**10.994**	**10.565**	**10.550**	
Targeting: OTM-167 + 168 ⇒ T46; OTM-168, 169 ⇒ T46										**Navigation Cost = 0.286**	

The cancellation of OTM-166, the final maneuver to target the prior Enceladus-5 (E5) encounter on October 9, 2008, would have resulted in a downstream ΔV cost of over 1 m/s, above the allowable penalty for canceling a maneuver of 0.5 m/s at this point in the mission. Additionally, canceling OTM-166 produced an E6 impacting trajectory with the nominal designs of OTMs 167 and 168 (see *OTM-166 AS* in Table 4). Hence, OTM-166 was performed to closely adhere to the reference trajectory in an effort to reduce downstream sensitivities in the trajectory.

Three maneuvers were scheduled for the E6/T46 double encounter: OTMs 167, 168, and 169, as listed in Table 3. Due to the near singularity between OTM-168 and either E6 or T46, resulting in more than one possible maneuver design, special measures were taken in the designs of OTMs 167 and 167 BU. For Cassini, the executions of main engine burns are delayed by approximately 7.5 seconds. Even to this level, the time delay had to be considered with the main engine OTM-168 in the OTM-167 design because OTM-168 was highly sensitive to the execution time by its proximity to pericrone (see *OTM-167 NS* in Table 4). Without this adjustment, the resulting OTM-168 design produced an impactor of E6. Additionally, the OTM-168 burn time had to be adjusted if OTM-167 BU was to be executed because OTM-167 BU / OTM-168 targeting to T46 also resulted in an E6 impactor (see *OTM-167 AS-2* in Table 4). For the T46 targeting strategy, changing the OTM-168 burn time to 10 minutes earlier not only removed the E6 impactor, but also moved E6 near the reference altitude of 200 km (see *OTM-167 AS-3* in Table 4). Of special note is OTM-168 BU, which was identified as a costly maneuver and scheduled only 5 hours after the prime maneuver time to minimize ΔV cost (see *OTM-168 AS* in Table 4).[12]

OTM-169, the approach maneuver targeting T46, was executed as a large RCS burn with a ΔV of 0.23 m/s. This maneuver underperformed significantly, resulting in a nearly 10 km miss of a low 1100 km Titan flyby and a downstream cost of over 7 m/s. This sub-par performance was due to the degradation of the primary RCS A-branch thrusters, leading to a swap to the redundant B-branch thrusters in March 2009.[11,13]

Table 4: Targeting Strategies for E6/T46 Double Flyby

Targeting Strategy*	Enceladus-6 (E6)		Titan-46 (T46)		Total ΔV
NS = Nominal Strategy *AS* = Alternate Strategy	TCA (ET SCET) Δ *from Ref. Traj.*	Altitude (km)	TCA (ET SCET) Δ *from Ref. Traj.*	Altitude (km)	Cost (m/s) Δ *from NS*
080520 Reference Traj.	**31-Oct-2008 17:15:56**	**200.33**	**03-Nov-2008 17:36:28**	**1100.00**	
OTM-166 Strategies (Pre-E5 Flyby)			*ΔV Cost through OTM-174 (T48)*		
Perform OTM-166, OTM-167 NS *NS*	**17:15:56.26** *(+0.26 sec)*	**185.42** *(−14.92)*			**19.314**
Cancel OTM-166, OTM-167 NS *AS*	17:16:16.39 *(+20.39 sec)*	−131.85 *(−332.19)*			20.3648 *(+1.051)*
OTM-167 Strategies (Post-E5 Flyby)			*ΔV Cost through OTM-174 (T48)*		
OTM-167 + 168 ⇒ T46 *NS*	**17:15:56.10** *(+0.10 sec)*	**188.04** *(−12.29)*			**19.447**
OTM-167 + 168 ⇒ T46/E6† *AS-1*			17:36:33.69 *(+4.69 sec)*	1090.48 *(−9.52)*	21.384 *(+1.937)*
OTM-167 BU + 168 ⇒ T46 *AS-2*	17:16:17.75 *(+20.75 sec)*	−139.59 *(−339.93)*			20.783 *(+1.336)*
OTM-167 BU + 168 Alt ⇒ T46‡ *AS-3*	17:15:54.54 *(−0.46 sec)*	199.44 *(−0.90)*			19.875 *(+0.428)*
OTM-168 Strategies (Post OTM-167)			*ΔV Cost through OTM-174 (T48)*		
OTM-168 ⇒ T46 *NS*	**17:15:56.09** *(+0.09 sec)*	**188.13** *(−12.20)*			**16.115**
OTM-168 BU ⇒ T46 *AS*	17:15:54.62 *(−0.38 sec)*	207.59 *(+7.26)*			20.803 *(+4.688)*
OTM-169 Strategies (Post OTM-168)			*ΔV Cost through OTM-177 (T49)*		
OTM-169 ⇒ T46 *NS*	**17:15:57.76** *(+0.76 sec)*	**175.53** *(−24.81)*			**12.815**
OTM-169 BU ⇒ T46 *AS*	17:15:58.19 *(+2.19 sec)*	151.76 *(−48.57)*			12.971 *(+0.156)*

* +: chain maneuvers, →: target to specified maneuver state, ⇒: target to specified flyby conditions

† OTM-167 targets the Cartesian state at OTM-168 from the reference trajectory based on OTM-168 targeting T46. OTM-168 targets E6 rather than T46 (see *OTM-167 NS*).

† OTM-167 BU chained with alternate OTM-168 placed 10 minutes earlier than the nominal OTM-168 time.

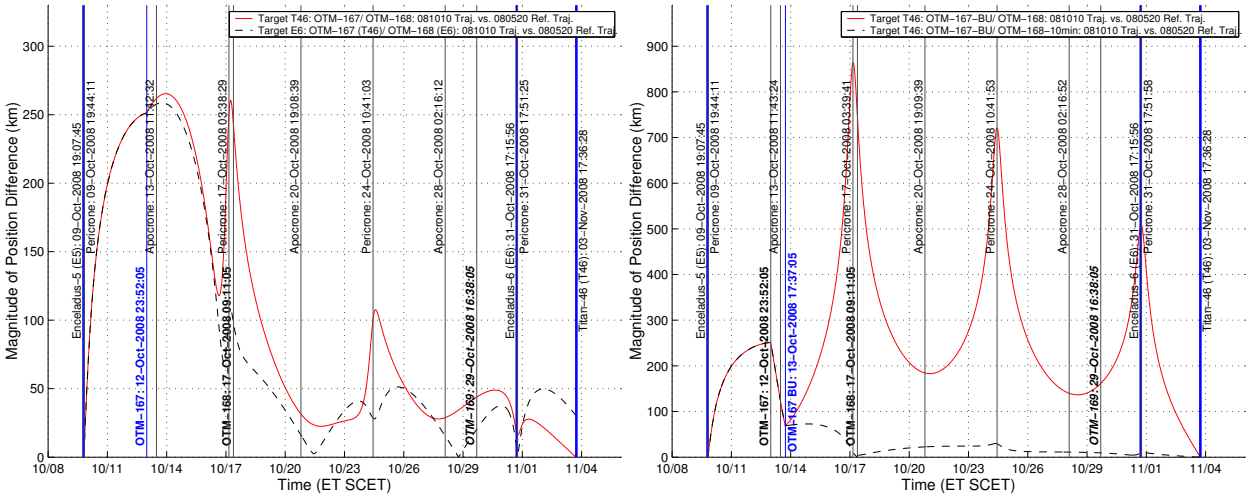

(a) OTM-167 Strategies: NS vs. AS-1

(b) OTM-167 Strategies: AS-2 vs. AS-3

Figure 3: E5 to T46/E6 Trajectory Deviations

B. Titan-67/Dione-2 (April 2010)

The inbound Titan-67 (T67) encounter on April 5, 2010, at an altitude of 7462 km, was followed two days later by the 500 km Dione-2 (D2) flyby on April 7, 2010. This was the first of two nearly back-to-back double flybys near the end of the Equinox Mission, first reported by Cassini Navigation in Reference 14.

Table 5: T67/D2 Maneuvers (OTMs 239–241)

OTM No.	Orbit Location	Maneuver Time (UTC SCET)	True Anomaly (deg)	Central Angle (deg)	Ref. ΔV (m/s)	Predicted ΔV Statistics Mean (m/s)	1-σ (m/s)	90% (m/s)	Design ΔV (m/s)	Recon. ΔV (m/s)	Burn Type
239	R2+8d	11-Mar-2010 01:34	177.03	394.53	1.087	1.241	0.344	1.705	... *CANCELLED* ...		
240	∼apo	26-Mar-2010 14:19	170.31	97.51	1.544	1.726	0.438	2.334	3.002	3.002	MEA
241	T67−3d	02-Apr-2010 13:49	−167.52	75.35	—	0.033	0.016	0.053	0.034	0.034	RCS
				ΔV totals	**2.631**	**2.999**	**0.464**	**3.609**	**3.036**	**3.036**	
Targeting: OTM-240, 241 ⇒ D2										**Navigation Cost = 0.406**	

Three maneuvers were planned for the T67/D2 double flyby: OTMs 239, 240, and 241, as listed in Table 5. The nominal strategy was to target OTM-239 to the Cartesian position of OTM-240, and OTM-240 to the T67 encounter (see *OTM-239 NS* in Table 6). This would put Cassini on the reference trajectory and better guarantee both T67 and D2. As a result of the E6/T46 double flyby earlier in the Equinox Mission, this 'XYZ' targeting strategy for the cleanup and apoapsis maneuvers was baselined for targeting a double flyby, over the navigation tour strategy of chaining the cleanup maneuver with downstream maneuvers. However, the larger-than-expected miss at the R2 flyby due to a ∼3 km error in the Rhea ephemeris[15] made this 'XYZ' targeting strategy more costly, adding more than 2.2 m/s to the downstream cost. By optimizing OTM-239 with OTM-240 to either T67 or D2, more than 1.5 m/s could be saved. Because less than 1 mm/s was placed into OTM-239 in both cases by the optimizer in the maneuver search software, the OTM-239 / OTM-240 optimization strategies effectively reduce to canceling OTM-239 and performing OTM-240 only (see *OTM-239 AS-1* and *OTM-239 AS-2* in Table 6). The R2 to T67/D2 trajectory deviations for each alternate targeting strategy as compared to the 'XYZ' targeting strategy are shown in Figure 4.

The science team preferred the option to target Dione because the observations at Dione were more sensitive to trajectory deviations, and to preserve a Janus observation which would be missed if T67 was targeted.[14] The project decided to cancel OTM-239 and target D2 with OTM-240 only (see *OTM-239 AS-2* in Table 6). The deviations at T67 by targeting D2 were acceptable as T67 was a high Titan flyby (7462 km altitude), allowing the non-targeted T67 altitude to be 24 km lower than planned.

Table 6: Targeting Strategies for T67/D2 Double Flyby

Targeting Strategy* *NS* = Nominal Strategy *AS* = Alternate Strategy	Titan-67 (T67) TCA (ET SCET) Δ *from Ref. Traj.*	Altitude (km)	Dione-2 (D2) TCA (ET SCET) Δ *from Ref. Traj.*	Altitude (km)	Total ΔV Cost (m/s) Δ *from NS*
091005 Reference Traj.	**05-Apr-2010 15:51:44**	**7461.91**	**07-Apr-2010 05:17:16**	**504.03**	
OTM-239 Strategies (Post-R2 Flyby)			ΔV *Cost through OTM-249 (T69)*		
OTM-239 → 240 ⇒ T67/D2 *NS*			05:17:15.55 *(−0.45 sec)*	503.99 *(−0.05)*	39.758
Cancel OTM-239: OTM-240 ⇒ T67 *AS-1*			05:16:53.14 *(−23.86 sec)*	541.41 *(+37.38)*	38.203 *(−1.554)*
Cancel OTM-239: OTM-240 ⇒ D2 *AS-2*	**15:51:59** *(+15.46 sec)*	**7437.77** *(−24.13)*			**38.230** *(−1.528)*

* +: chain maneuvers, →: target to specified maneuver state, ⇒: target to specified flyby conditions

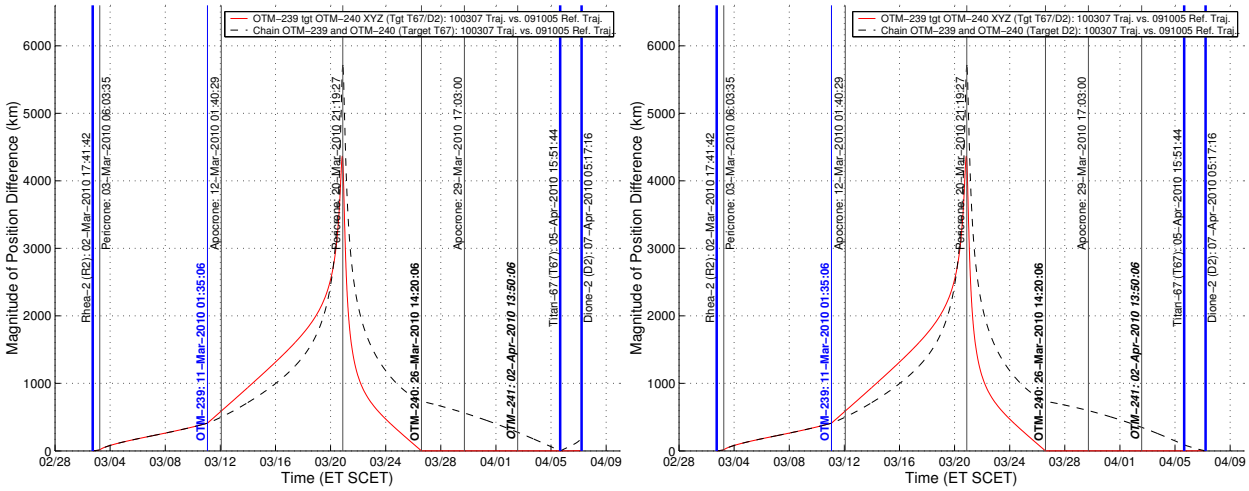

(a) OTM-239 Strategies: NS vs. AS-1

(b) OTM-239 Strategies: NS vs. AS-2

Figure 4: R2 to T67/D2 Trajectory Deviations

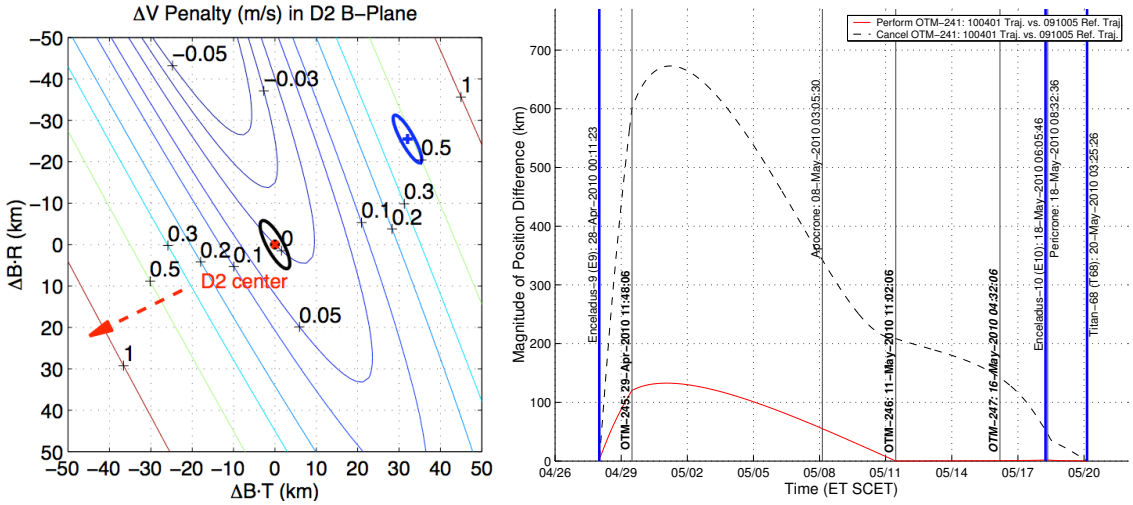

(a) OTM-241 ΔV Cost Contours in D2 B-Plane

(b) OTM-241 Strategies: Perform or Cancel OTM-241

Figure 5: Ramifications of Canceling OTM-241 to E10/T68 Double Flyby

The targeting strategy for the next double flyby (E10/T68) was closely tied to the accuracy of the T67/D2 dual encounter; performing OTM-241 would help guarantee the 'XYZ' targeting strategy for the E10/T68 double flyby would be preserved. Canceling OTM-241, the final approach to the T67/D2 dual flyby, would have incurred a predicted cost of 0.53 m/s. This cost can be visualized via contour plots of downstream ΔV cost vs. B-plane aimpoint miss (see Reference 16 for how the contour plots are produced). In Figure 5a, the blue ellipse is the 1-σ OD error ellipse corresponding to the cancellation of OTM-241 and the black ellipse is the 1-σ delivery ellipse following the execution of OTM-241. This cost comes from the difference between preserving the 'XYZ' targeting of OTM-245 to the state at OTM-246 (if OTM-241 is performed) and optimizing OTM-245 with OTM-246 (if OTM-241 is cancelled). This targeting strategy difference is shown in the trajectory deviations from E9 to the E10/T68 double flyby (see Figure 5b). Similar to Rhea, there was a large correction to Dione's ephemeris following the T67/D2 double flyby,[15] resulting in a significant miss at Titan which, fortunately, did not translate into a large downstream cost.

C. Enceladus-10/Titan-68 (May 2010)

This was the third and last double flyby in the Equinox Mission, only one month after the T67/D2 dual encounter. Again, Titan was chosen as the targeted flyby. The first maneuver targeting to the double flyby, OTM-245, was scheduled only 36 hours after the prior Enceladus-9 (E9) flyby, instead of the typical 3 days. Because of this shortened timeline, preliminary analysis had to begin earlier before the E9 flyby and the final analysis just after the flyby. The targeting of the double flyby also had to preserve a solar Enceladus plume occultation prior to Enceladus-10. The E10/T68 double flyby was previously reported by Cassini Navigation in Reference 14.

Table 7: E10/T68 Maneuvers (OTMs 245–247)

OTM No.	Orbit Location	Maneuver Time (UTC SCET)	True Anomaly (deg)	Central Angle (deg)	Ref. ΔV (m/s)	Predicted ΔV Statistics Mean (m/s)	1-σ (m/s)	90% (m/s)	Design ΔV (m/s)	Recon. ΔV (m/s)	Burn Type
245	E9+2d	29-Apr-2010 11:47	139.73	363.09	5.806	5.801	0.115	5.946	5.714	5.716	MEA
246	∼apo	11-May-2010 11:01	−170.61	313.32	8.815	8.833	0.064	8.918	8.884	8.881	MEA
247	T68−4d	16-May-2010 04:31	−146.86	289.57	—	0.037	0.066	0.142	... *CANCELLED* ...		
				ΔV totals	**14.621**	**14.705**	**0.126**	**14.865**	**14.599**	**14.597**	
Targeting: OTM-245 → 246 ⇒ T68; OTM-246 ⇒ T68										**Navigation Cost = −0.024**	

Three maneuvers were scheduled for the E10/T68 dual encounter: OTMs 245, 246, and 247, as shown in Table 7. Like the T67/D2 double flyby, the nominal strategy involved targeting the cleanup maneuver (OTM-245) to the Cartesian position at the time of the apoapsis maneuver (OTM-246), and then targeting OTM-246 to the T68 flyby (see *OTM-245 NS* in Table 8). One alternate strategy was to also target OTM-245 to the OTM-246 state, but use OTM-246 to meet the E10 encounter conditions (see *OTM-245 AS-1* in Table 8). This strategy yielded an additional cost of 3.1 m/s over the nominal strategy. The alternate strategy of chaining OTMs 245 and 246 and targeting the T68 flyby (see *OTM-245 AS-2* in Table 8) resulted in a downstream total ΔV similar to the nominal strategy. However, the E10 flyby would have been lowered by 15 km and the TCA off by nearly 2 seconds, producing unacceptable trajectory deviations as illustrated in Figure 6b for many sensitive science observations planned around the E10/T68 dual flyby, including an Enceladus plume occultation prior to E10.

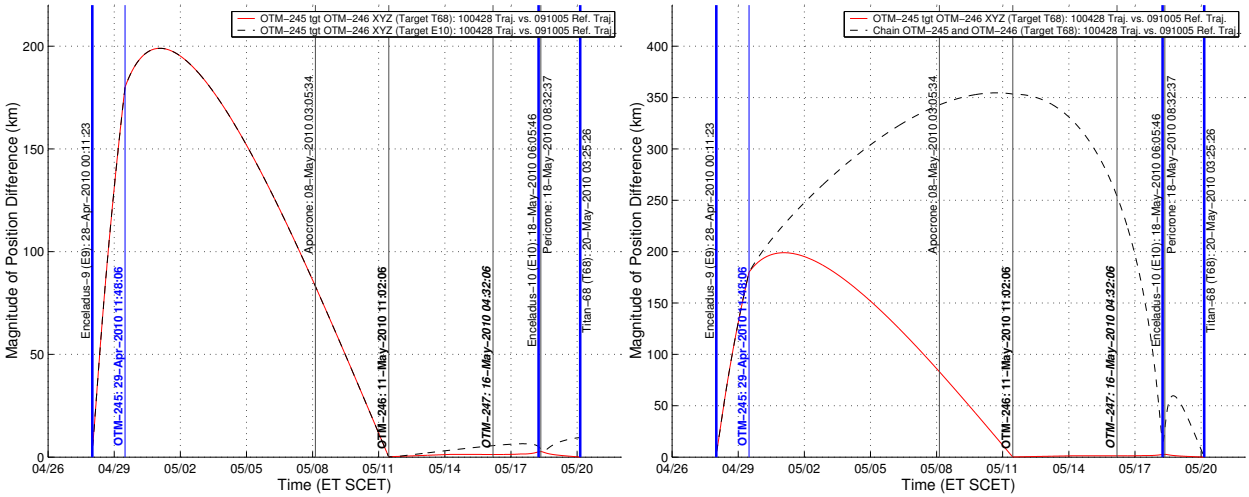

(a) OTM-245: NS & AS-1

(b) OTM-245: NS & AS-2

Figure 6: E9 to E10/T68 Trajectory Deviations

Table 8: Targeting Strategies for E10/T68 Double Flyby

Targeting Strategy*	Enceladus-10 (E10)		Titan-68 (T68)		Total ΔV
NS = Nominal Strategy *AS* = Alternate Strategy	TCA (ET SCET) Δ *from Ref. Traj.*	Altitude (km)	TCA (ET SCET) Δ *from Ref. Traj.*	Altitude (km)	Cost (m/s) Δ *from NS*
091005 Reference Traj.	**18-May-2010 06:05:46**	**438.85**	**20-May-2010 03:25:26**	**1400.00**	
OTM-245 Strategies (Pre-E9 Flyby)			*ΔV Cost through OTM-255 (T71)*		
OTM-245 → 246 ⇒ T68 *NS*	**06:05:45.91** *(−0.09 sec)*	**437.73** *(−1.12)*			**33.674**
OTM-245 → 246 ⇒ E10 *AS-1*			03:25:26.30 *(+0.30 sec)*	1409.38 *(+9.38)*	36.817 *(+3.143)*
OTM-245 + 246 ⇒ T68 *AS-2*	06:05:44.40 *(−1.60 sec)*	423.93 *(−14.92)*			33.742 *(+0.068)*
OTM-246 Strategies (Post OTM-245)			*ΔV Cost through OTM-255 (T71)*		
OTM-246 ⇒ T68 *NS*	**06:05:44.90** *(−0.10 sec)*	**439.41** *(+0.56)*			**27.939**
OTM-246 ⇒ E10 *AS-1*			03:25:25.71 *(−0.29 sec)*	1407.19 *(+7.19)*	32.273 *(+4.334)*
OTM-246 BU ⇒ T68 *AS-2*	06:05:40.52 *(−5.48 sec)*	384.80 *(−54.05)*			28.131 *(+0.192)*
OTM-246 BU ⇒ E10 *AS-3*			03:25:42.41 *(+16.41 sec)*	1521.47 *(+121.47)*	38.345 *(+10.406)*
OTM-247 Strategies (Post OTM-246)			*ΔV Cost through OTM-258 (E11)*		
OTM-247 ⇒ Alt. T68† *NS*	06:05:47.26 *(+1.26 sec)*	444.37 *(+5.52)*			26.389
Cancel OTM-247 *AS*	**06:05:46.37** *(+0.37 sec)*	**440.98** *(+2.13)*			**26.254** *(−0.136)*

* +: chain maneuvers, →: target to specified maneuver state, ⇒: target to specified flyby conditions

† T68 time changed by +1.42 sec to bring OTM-247 to an implementable ΔV size.

Targeting OTM-246 to E10, at both the prime and backup opportunities, became costlier due to the execution errors following OTM-245 at 4.3 m/s and 10.4 m/s, respectively (see *OTM-246 AS-1* and *AS-3* in Table 8). The nominal strategy of targeting OTM-246 to T68 was chosen to setup the E10/T68 double flyby and to get off an impacting trajectory following the execution of OTM-245 (see *OTM-246 NS* in Table 8). Finally, OTM-247 was not required and was cancelled to save 0.14 m/s (see *OTM-247 AS* in Table 8).

D. Dione-3/Titan-79 (December 2011)

This would be the sole double flyby of the Cassini Solstice Mission and the last planned for the mission, first reported by Cassini Navigation in Reference 17. Titan was chosen as the target over Dione to avoid a possible downstream cost. Like the Enceladus-6/Titan-46 double flyby, the second targeting maneuver to the Dione-3/Titan-79 double flyby became prohibitively large at its backup window. Also, because of the poor performance of the approach maneuver to the Enceladus-6/Titan-46 double flyby, an auxiliary maneuver was added prior to the nominal final approach maneuver to the Dione-3/Titan-79 double flyby to mitigate the chance of a large RCS or small main engine burn for the final correction maneuver. However, a 3-σ change at Dione-3 from ephemeris errors caused a large miss at Titan,[15] which translated into a small downstream cost thanks to the favorable direction of the miss and the re-optimization of the following Titan target.[17,18]

Four maneuvers were scheduled for the D3/T79 dual flyby: OTMs 299, 300, 300a, and 301, as listed in Table 9. OTM-300 was designed to perform the brunt of the work in changing the Titan aimpoint shift and TCA, as well as crossing the Titan impact disc. The 'XYZ' targeting strategy was again set as the nominal strategy for targeting a double flyby, where the cleanup maneuver OTM-299 was targeted to the state at OTM-300, and the apoapsis maneuver OTM-300 was targeted to the T79 encounter (see *OTM-299 NS* and *OTM-300 NS* in Table 10). Targeting OTM-300 to the D3 flyby would result in a 14 km miss, adding 2.6 m/s

Table 9: D3/T79 Maneuvers (OTMs 299–301)

OTM No.	Orbit Location	Maneuver Time (UTC SCET)	True Anomaly (deg)	Central Angle (deg)	Ref. ΔV (m/s)	Predicted ΔV Statistics Mean (m/s)	1-σ (m/s)	90% (m/s)	Design ΔV (m/s)	Recon. ΔV (m/s)	Burn Type
299	E16+3d	09-Nov-2011 00:17	153.99	711.47	2.192	2.251	0.091	2.369	2.088	2.086	MEA
300	∼peri	24-Nov-2011 05:18	15.07	490.43	2.948	3.096	0.179	3.312	2.975	2.976	MEA
300c	∼peri	24-Nov-2011 21:33	121.27	383.99	—	—	—	—	.. *CONTINGENCY* ..		
300a	∼apo	01-Dec-2011 23:04	176.36	328.87	—	0.046	0.033	0.092	0.021	0.022	RCS
301	T79−4d	09-Dec-2011 08:49	−154.31	299.55	—	0.018	0.009	0.030	0.018	0.019	RCS
				ΔV totals	**5.140**	**5.411**	**0.216**	**5.694**	**5.102**	**5.103**	
Targeting: OTM-299 → 300 ⇒ T79; OTM-300, 300a, 301 ⇒ T79										**Navigation Cost = −0.037**	

Table 10: Targeting Strategies for D3/T79 Double Flyby

Targeting Strategy* *NS* = Nominal Strategy *AS* = Alternate Strategy	Dione-3 (D3) TCA (ET SCET) Δ *from Ref. Traj.*	Dione-3 (D3) Altitude (km)	Titan-79 (T79) TCA (ET SCET) Δ *from Ref. Traj.*	Titan-79 (T79) Altitude (km)	Total ΔV Cost (m/s) Δ *from NS*
091005 Reference Traj.	**12-Dec-2011 09:40:28.60**	**99.75**	**13-Dec-2011 20:12:30**	**3585.84**	
OTM-299 Strategies (Pre-E9 Flyby)			*ΔV Cost through OTM-312 (E17)*		
OTM-299 → 300 ⇒ T79 *NS*	**09:40:29.01** *(+0.40 sec)*	**100.35** *(+0.60)*			**8.603**
OTM-299 → 300 ⇒ D3 *AS-1*			20:12:28.82 *(−1.18 sec)*	3599.87 *(+14.03)*	11.153 *(+2.550)*
OTM-299 BU → 300 ⇒ T79 *AS-2*	09:40:29.00 *(+0.40 sec)*	100.36 *(+0.61)*			9.377 *(+0.773)*
OTM-300 Strategies (Post OTM-299)			*ΔV Cost through OTM-312 (E17)*		
OTM-300 ⇒ T79 *NS*	**09:40:29.16** *(+0.56 sec)*	**100.32** *(+0.57)*			**6.521**
OTM-300 ⇒ D3 *AS-1*			20:12:28.34 *(−1.66 sec)*	3603.75 *(+17.91)*	9.764 *(+3.243)*
OTM-300c + 300a ⇒ Float D3/T79 *AS-2*					
OTM-300 BU + 300a ⇒ Float D3/T79 *AS-3*					
OTM-300a Strategies (Post OTM-300)			*ΔV Cost through OTM-312 (E17)*		
OTM-300a ⇒ T79 *NS*					**3.571**
OTM-301 ⇒ T79 *AS*					3.727 *(+0.156)*
OTM-301 Strategies (Post OTM-300a)			*ΔV Cost through OTM-315 (E18)*		
OTM-301 ⇒ T79 *NS*	**09:40:29.23** *(+0.62 sec)*	**100.19** *(+0.45)*			**3.651**
Cancel OTM-301 *AS*	09:40:28.98 *(+0.37 sec)*	103.45 *(+3.70)*	20:12:27.95 *(−2.05 sec)*	3573.19 *(−12.64)*	6.531 *(+2.880)*

* +: chain maneuvers, →: target to specified maneuver state, ⇒: target to specified flyby conditions

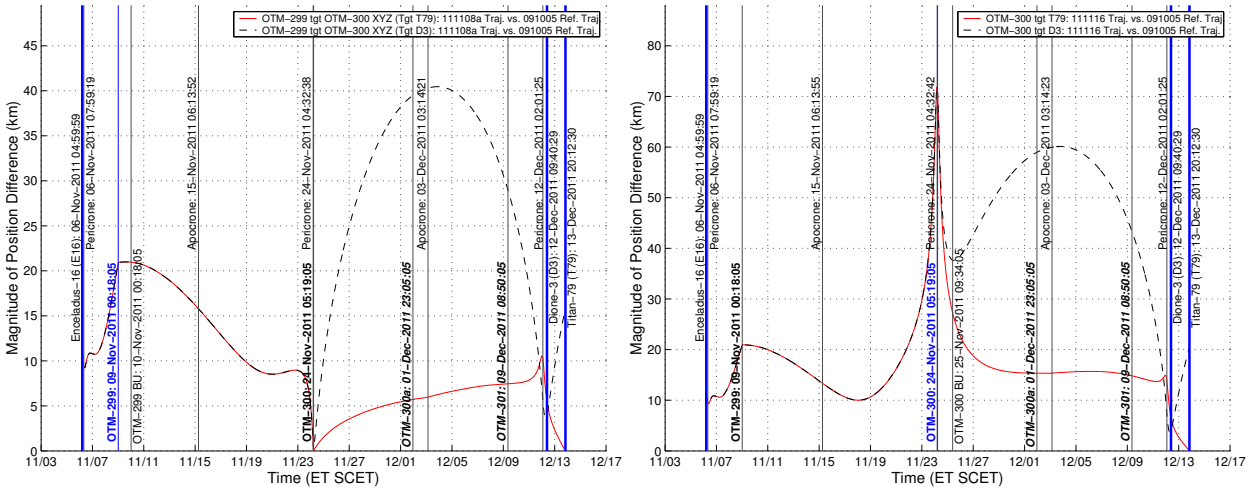

(a) OTM-299: NS & AS-1

(b) OTM-300: NS & AS-1

Figure 7: E16 to D3/T79 Trajectory Deviations

to the downstream cost (see *OTM-299 AS-1* in Table 10). Performing OTM-300 at the backup opportunity to target T68 would incur an additional 0.77 m/s cost from the nominal strategy (see *OTM-299 AS-2* in Table 10).

Targeting OTM-300 to the D3 flyby was predicted to cost 3.2 m/s over the nominal strategy (see *OTM-300 AS-1* in Table 10). This alternate strategy would also lower the Titan altitude by about 18 km and yield a larger deviation from the reference trajectory leading to the D3/T79 double flyby, as shown in Figure 7b. Because of the large penalty at the OTM-300 backup window, several studies were conducted to search for the least costly backup maneuver designs.[18] The earliest placement of the OTM-300 backup window was identified as 12 hours after the prime location. This backup location was given the special designation OTM-300c. In the case of a safing event, either OTM-300c or OTM-300 BU would be performed, designed in an optimization chain with OTM-300a and allowing the D3 and T79 flybys to float (see *OTM-300 AS-2* and *OTM-300 AS-3* in Table 10).

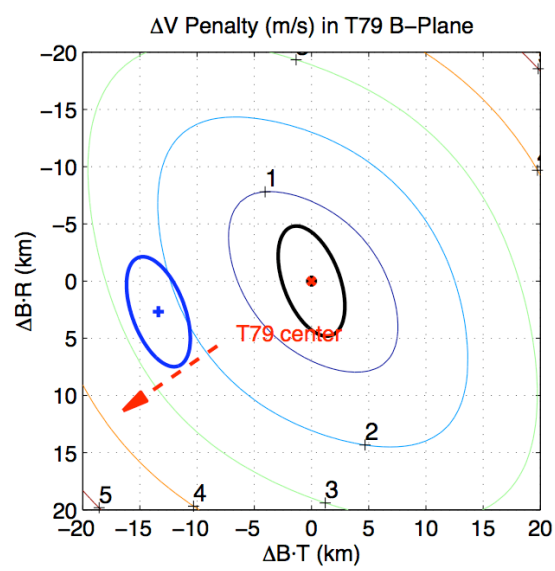

Figure 8: OTM-301 ΔV Cost Contours

As a result of the underperformance of the large final approach RCS burn to the E6/T46 double flyby (OTM-169) described in an earlier section, OTM-300a was inserted between OTM-300 and OTM-301 to mitigate the chance of OTM-301 becoming a large RCS burn. In the absence of OTM-300a, OTM-301 would have to make a large T68 B-plane correction of over 200 km, similar to the nearly 300 km that OTM-169 corrected at the T46 B-plane. With OTM-300a, OTM-301 only had to correct approximately 14 km, reducing the risk of a large T68 flyby miss which could translate to a large downstream ΔV penalty.

OTM-301 was performed to avoid a downstream penalty of nearly 3 m/s, as shown by the OD error ellipse (blue) in Figure 8. The contour plot also reveals how a small Titan B-plane miss can result in a large downstream cost. For example, a small shift in the Dione ephemeris following D3 could result in a 5 km OD error at T79, translating into a 1 m/s downstream penalty.

VI. Lessons Learned

The Cassini tour of Saturn continues to offer the navigation team a broad experience, the mission to date surpassing 100 Titan flybys and achieving dozens of close encounters with Enceladus and other icy satellites. This navigation experience is enhanced with double flybys interspersed throughout the Cassini mission from 2005 to 2011. In particular, the navigation of the four double flybys of the Equinox and Solstice Missions taught several lessons that not only helped navigation operations of subsequent double flybys, but also navigation as a whole.

During the Prime Mission, it was learned to not perform the final approach maneuver to an encounter with main engine. This lesson proved costly with the execution of OTM-145, the approach maneuver to target the Titan-41 (T41) flyby. OTM-145 had a ΔV of 0.30 m/s and was performed as a small main engine burn instead of a large RCS maneuver.[19] Because of the larger execution errors associated with a main engine burn and a low 1000 km Titan flyby, a nearly 5 km miss at T41 manifested into more than a 3 m/s downstream penalty. As a result, only RCS will be used for final approach maneuvers.

With the first dual encounter of the Equinox Mission, E6/T46, several lessons were identified and applied to the subsequent double flybys of the mission. For the E6/T46 double flyby, the nominal maneuver strategy of optimizing the cleanup maneuver with the apoapsis maneuver was utilized to minimize predicted downstream ΔV costs. As another option, the cleanup maneuver can be targeted to the Cartesian position at the time of the apoapsis maneuver, and the apoapsis maneuver targeted to the flyby. Although this alternative strategy is potentially more expensive in ΔV, the trajectory that follows is generally closer to the reference trajectory, increasing the likelihood of achieving the double flyby conditions. This 'XYZ' targeting approach was adopted for the remaining double flybys in the mission. As described previously, OTM-169, the approach maneuver targeting T46, was executed as a large RCS burn with a ΔV of 0.23 m/s and significantly underperformed yielding a nearly 10 km Titan miss and a downstream cost of over 7 m/s. The large Titan miss following the sub-par performance of OTM-169 would have been mitigated if an auxiliary maneuver such as OTM-168a was placed between OTM-168 and OTM-169. With more time-to-go, OTM-168a would have been a smaller maneuver to target the T46 flyby and OTM-169, if needed, would likely have remained small. In the planning of the D3/T79 double flyby in the Solstice Mission, OTM-300a was inserted between OTM-300 and OTM-301 to keep the latter maneuver from becoming a large RCS burn.

When Titan was part of a double flyby, there was no clear benefit in targeting the icy satellite because of the ephemeris uncertainties. For the T67/D2 double flyby, Dione could be targeted over Titan because T67 was a high flyby of 7462 km. So a miss in T67 would not be as costly as a miss of a close Titan flyby. Other than the T3/E0 dual flyby, the second encounter in each double flyby was targeted. Titan was the second flyby in most of these cases, with the exception of the T67/D2 double encounter. The inclusion of optical navigation data was seen to help reduce the OD uncertainties at the double encounters, specifically for the T67/D2 and E10/T68 dual flybys.[20]

In both extended missions, there were a number of deterministic maneuvers that occurred at locations near Saturn periapsis. The associated backup maneuvers, which are generally scheduled one day after the prime maneuver locations, showed fairly high ΔV costs both in the maneuvers themselves and in downstream maneuvers.[12,18] These magnified ΔV costs were seen with OTM-168 BU (prior to E6/T46 double flyby) and OTM-300 BU (prior to D3/T79 dual encounter). Even if a backup maneuver is not expensive to perform, the change in the flyby arrival asymptote may cause a large miss of the non-targeted encounter, which in turn can produce a large downstream ΔV penalty.

VII. Conclusion

After nearly 10 years, the Cassini spacecraft has toured Titan and Saturn's icy moons over 100 times. This flyby-extensive tour has been a challenge for the Cassini Navigation Team, even more so with the inclusion of double flybys. The seven dual encounters that occurred from 2005 through 2011 spanned all Cassini tour phases (Prime, Equinox, and Solstice Missions). This paper discussed the navigation strategies for each of these double flybys, as well as the experience gained from each. Lessons learned from the four double flybys of the extended missions, which were actively managed by the Cassini Navigation Team, helped shape the Cassini Project's maneuver decision process and also continue to influence this process in the remainder of the mission.

Appendix A: Maneuver Execution

Maneuvers are performed by Cassini's bipropellant Main Engine Assembly (MEA) or monopropellant Reaction Control Subsystem (RCS) (see Figure 9). The RCS consists of four hydrazine thruster clusters grouped into two sets: the first set is along $\pm\mathbf{Y_{S/C}}$, and is used to make balanced roll turns about the $\mathbf{Z_{S/C}}$ axis; the second set faces the $-\mathbf{Z_{S/C}}$ axis and is used to make unbalanced yaw turns about the $\mathbf{Y_{S/C}}$ axis. RCS is used for attitude control, reaction wheel momentum dumps, and small maneuvers ($\Delta V < 0.25$ m/s). The MEA is utilized for larger burns if the predicted burn time is at least 1.5 sec (actual burn time > 1.3 sec). This burn duration minimum was set by OTM-318 to avoid a software limitation of 1 sec for burn times.[17] Currently, this translates to MEA burns that are at least 0.25 m/s.

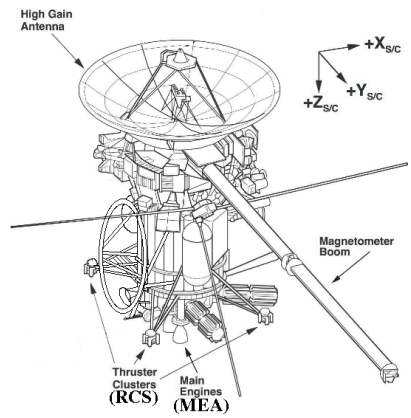

Figure 9: Cassini Orbiter

Each maneuver is executed in a turn-and-burn manner: the required burn attitude is achieved by performing a roll turn followed by a yaw turn (wind turns), the burn is then executed and, after completion, the turns are reversed to return to the original attitude (unwind turns). Turns performed with the Reaction Wheel Assembly (RWA) and roll turns performed by the RCS do not impart ΔV to the spacecraft. Moreover, yaw turns executed by RCS do contribute ΔV because these thrusters are unbalanced about the $\mathbf{Y_{S/C}}$ axis. All roll turns and the yaw turn for RCS maneuvers are typically executed by the RWA. However, the yaw turn for MEA maneuvers is usually performed by RCS thrusters. For this reason, the computation of MEA maneuvers needs to account for the ΔV imparted by the turns.

Maneuver execution errors are modeled via the methodology proposed by Gates[21] which enables ΔV statistical analysis and the determination of the maneuver delivery accuracy.[22] The execution-error models have been updated based on maneuver performance during the Saturnian tour.[13,23]

A planned maneuver can be cancelled if it is determined that its execution will not improve encounter conditions, yield downstream ΔV savings, or if a subsequent maneuver can attain the encounter conditions at a lower ΔV cost. A common cancellation case is an approach maneuver preceded by accurate shaping maneuvers. These criteria are subordinate to science requirements. A more detailed account of the Project's maneuver cancellation process is provided in Reference 3.

Depending on science requirements, certain encounters admit the modification of targeting parameters. Such modification can be necessary for two reasons: (1) when a maneuver is smaller than the smallest implementable maneuver (approximately 10 mm/s), it is possible to modify the encounter time by a few tenths-of-a-second and artificially increase the maneuver magnitude and (2) some target modifications to the spatial components $\mathbf{B} \cdot \mathbf{R}$ and $\mathbf{B} \cdot \mathbf{T}$ can yield downstream ΔV savings (about 1 gram of hydrazine per mm/s saved for RCS-sized maneuvers).

Appendix B: B-Plane Description

Planet or satellite approach trajectories are typically described in aiming plane coordinates referred to as "B-plane" coordinates[4] (see Figure 10). The B-plane is a plane passing through the target body center and perpendicular to the asymptote of the incoming trajectory (assuming two-body conic motion). The "B-vector," $\mathbf{B}$, is a vector in that plane, from the target body center to the piercing-point of the trajectory asymptote. The B-vector specifies where the point of closest approach would be if the target body had no mass and did not deflect the flight path. Coordinates are defined by three orthogonal unit vectors, $\mathbf{S}$, $\mathbf{T}$ and $\mathbf{R}$, with the system origin at the center of the target body. The $\mathbf{S}$ vector is parallel to the spacecraft $\mathbf{V}_\infty$ vector (approximately the velocity vector at the time of entry into the gravitational sphere of influence). $\mathbf{T}$ is arbitrary, but it is typically specified to lie in the ecliptic plane (e.g., EMO2000), or in a body equatorial plane (e.g., EME2000). Finally, $\mathbf{R}$ completes an orthogonal triad with $\mathbf{S}$ and $\mathbf{T}$ (i.e., $\mathbf{R} = \mathbf{S} \times \mathbf{T}$).

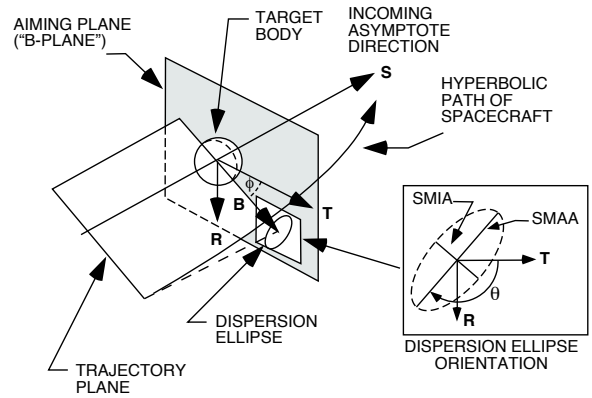

Figure 10: B-Plane Coordinate System

A target point can be described in terms of the B-vector dotted into the $\mathbf{R}$ and $\mathbf{T}$ vectors ($\mathbf{B} \cdot \mathbf{R}$ and $\mathbf{B} \cdot \mathbf{T}$). The spacecraft state in the B-plane can be represented by the following six quantities: $\mathbf{B} \cdot \mathbf{R}$, $\mathbf{B} \cdot \mathbf{T}$, TF (time-of-flight), $\mathbf{S} \cdot \mathbf{R}$, $\mathbf{S} \cdot \mathbf{T}$, and C_3. $\mathbf{S} \cdot \mathbf{R}$ and $\mathbf{S} \cdot \mathbf{T}$ are the declination and right ascension of the incoming asymptote $\mathbf{S}$ and C_3 is the vis-viva integral (V_∞^2). The B-plane error (miss) is determined by $\Delta\mathbf{B} \cdot \mathbf{R}$, $\Delta\mathbf{B} \cdot \mathbf{T}$, and ΔTF; the asymptote error is determined by $\Delta\mathbf{S} \cdot \mathbf{R}$, $\Delta\mathbf{S} \cdot \mathbf{T}$, and ΔC_3.

Trajectory errors in the B-plane are often characterized by a 1-σ dispersion ellipse, shown in Figure 10. SMAA and SMIA denote the semi-major and semi-minor axes of the ellipse; θ is the orientation angle of the ellipse measured clockwise from the $\mathbf{T}$ axis. The dispersion normal to the B-plane is typically given as a 1-σ time-of-flight error, where time-of-flight specifies what the time to encounter would be from some given epoch if the magnitude of the B-vector were zero. Alternatively, this dispersion is sometimes given as a 1-σ distance error along the $\mathbf{S}$ direction, numerically equal to the time-of-flight error multiplied by the magnitude of the $\mathbf{V}_\infty$ vector.

Acknowledgments

The authors thank Kevin Criddle for reviewing this paper and Rodica Ionasescu for locating information on the earlier double flybys of the Prime Mission. The authors also extend their gratitude to past and present members of the Cassini Navigation Team for their contributions to the work reported in this manuscript. This research was carried out at the Jet Propulsion Laboratory, California Institute of Technology, under a contract with the National Aeronautics and Space Administration.

References

[1]B. Buffington, N. Strange, and J. Smith, "Overview of the Cassini Extended Mission Trajectory," *AIAA/AAS Astrodynamics Specialist Conference,* AIAA-2008-6752, Honolulu, Hawaii, August 18–21, 2008.

[2]B. Buffington, R. Ionasescu, and N. Strange, "Addition of a Low Altitude Tethys Flyby to the Nominal Cassini Tour," *AAS/AIAA Astrodynamics Specialist Conference,* AAS Paper 05-270, Lake Tahoe, CA, August 7–11, 2005.

[3]P. N. Williams, E. M. Gist, T. D. Goodson, Y. Hahn, P. W. Stumpf, and S. V. Wagner, "Orbit Control Operations for the Cassini-Huygens Mission," *SpaceOps 2008 Conference,* AIAA-2008-3429, Heidelberg, Germany, May 12–16, 2008.

[4]W. Kizner, "A Method of Describing Miss Distances for Lunar and Interplanetary Trajectories," August 1, 1959.

[5]P. G. Antreasian, J. J. Bordi, K. E. Criddle, R. Ionasescu, R. A. Jacobson, J. B. Jones, R. A. MacKenzie, M. C. Meek, F. J. Pelletier, D. C. Roth, I. M. Roundhill, and J. Stauch, "Cassini Orbit Determination Performance During The First Eight Orbits of the Saturn Satellite Tour," *AAS/AIAA Astrodynamics Specialist Conference,* AAS 05-312, Lake Tahoe, California, August 7–11, 2005.

[6]F. J. Pelletier, B. B. Buffington, N. Strange, and T. Denk, "Re-Aiming Cassini's Iapetus Flyby," *AAS/AIAA Astrodynamics Specialist Conference,* AAS Paper 07-255, Mackinac Island, Michigan, August 19–23, 2007.

[7]S. V. Wagner, E. M. Gist, T. D. Goodson, Y. Hahn, P. W. Stumpf, and P. N. Williams, "Cassini-Huygens Maneuver

Experience: Second Year of Saturn Tour," *AIAA/AAS Astrodynamics Specialist Conference,* AIAA-2006-6663, Keystone, CO, August 21–24, 2006.

[8]K. E. Criddle, P. G. Antreasian, J. J. Bordi, R. Ionasescu, R. A. Jacobson, R. A. Mackenzie, D. W. Parcher, F. J. Pelletier, and J. R. Stauch, "Cassini Orbit Determination: The Only Targeted Hyperion Flyby Of The Prime Mission," *AAS Rocky Mountain Guidance And Control Conference,* AAS Paper 06-082, Breckenridge, CO, February 4–8, 2006.

[9]P. G. Antreasian, J. J. Bordi, K. E. Criddle, R. Ionasescu, R. A. Jacobson, J. B. Jones, R. A. MacKenzie, D. W. Parcher, F. J. Pelletier, D. C. Roth, and J. Stauch, "Cassini Orbit Determination Performance During Saturn Satellite Tour: August 2005 - January 2006," *AAS/AIAA Astrodynamics Specialist Conference,* AAS 07-253, Mackinac Island, Michigan, August 19–23, 2007.

[10]J. Smith and B. Buffington, "Overview of the Cassini Solstice Mission Trajectory," *AAS/AIAA Astrodynamics Specialist Conference,* AAS Paper 09-351, Pittsburg, PA, August 18–21, 2009.

[11]E. M. Gist, C. G. Ballard, Y. Hahn, P. W. Stumpf, S. V. Wagner, and P. N. Williams, "Cassini-Huygens Maneuver Experience: First Year of the Equinox Mission," *AAS/AIAA Astrodynamics Specialist Conference,* AAS Paper 09-349, Pittsburgh, PA, August 9–13, 2009.

[12]C. G. Ballard, "Backup Maneuver Study: Strategies to Reduce Cost," JPL IOM 343C-08-007, NASA Jet Propulsion Laboratory, Pasadena, CA, October 1, 2008.

[13]S. V. Wagner, "Maneuver Performance Assessment of the Cassini Spacecraft Through Execution-Error Modeling and Analysis," *AAS/AIAA Space Flight Mechanics Meeting,* AAS Paper 14-390, Santa Fe, New Mexico, January 26–30, 2014.

[14]C. G. Ballard, J. Arrieta, Y. Hahn, P. W. Stumpf, S. V. Wagner, and P. N. Williams, "Cassini Maneuver Experience: Ending the Equinox Mission," *AIAA/AAS Astrodynamics Specialist Conference,* AIAA-2010-8257, Toronto, Canada, August 2–5, 2010.

[15]F. Pelletier, P. Antreasian, S. Ardalan, B. Buffington, K. Criddle, R. Ionasescu, R. Jacobson, J. Jones, S. Nandi, S. Nolet, P. Daniel, D. Roth, J. Smith, and P. Thompson, "Cassini Orbit Determination Performance (July 2008 - December 2011)," *SpaceOps 2012,* AIAA-2012-1256588, Stockholm, Sweden, June 11–15, 2012.

[16]P. W. Stumpf, E. M. Gist, T. D. Goodson, Y. Hahn, S. V. Wagner, and P. N. Williams, "Flyby Error Analysis Based on Contour Plots for the Cassini Tour," *AIAA/AAS Astrodynamics Specialist Conference,* AIAA-2008-6749, Honolulu, HI, August 18–21, 2008.

[17]J. Arrieta, C. G. Ballard, Y. Hahn, P. W. Stumpf, P. N. Valerino, and S. V. Wagner, "Cassini Solstice Mission Maneuver Experience: Year Two," *AIAA/AAS Astrodynamics Specialist Conference,* AIAA-2012-4433, Minneapolis, MN, August 13–16, 2012.

[18]C. G. Ballard, "Backup Maneuver Studies for the Cassini Solstice Mission," JPL IOM 343C-10-007, NASA Jet Propulsion Laboratory, Pasadena, CA, September 3, 2010.

[19]T. D. Goodson, C. G. Ballard, E. M. Gist, Y. Hahn, P. W. Stumpf, S. V. Wagner, and P. N. Williams, "Cassini Maneuver Experience: Ending the Prime Mission," *AIAA/AAS Astrodynamics Specialist Conference,* AIAA-2008-6751, Honolulu, HI, August 18–21, 2008.

[20]R. Ionasescu, P. G. Antreasian, J. B. Jones, and D. C. Roth, "Orbit Determination Covariance Analysis for the Cassini Extended Mission," *AAS/AIAA Space Flight Mechanics Meeting,* AAS Paper 09-163, Savannah, GA, February 8–12, 2009.

[21]C. R. Gates, "A Simplified Model of Midcourse Maneuver Execution Errors," Tech. Rep. 32-504, NASA Jet Propulsion Laboratory, Pasadena, CA, October 15, 1963.

[22]C. G. Ballard and R. Ionasescu, "Flight Path Control Design for the Cassini Solstice Mission," *AAS/AIAA Astrodynamics Specialists Conference,* AAS Paper 11-530, Girdwood, AK, July 31–August 4, 2011.

[23]S. V. Wagner and T. D. Goodson, "Execution-Error Modeling and Analysis of the Cassini-Huygens Spacecraft Through 2007," *AAS/AIAA Space Flight Mechanics Meeting,* AAS Paper 08-113, Galveston, TX, January 27–31, 2008.