Real-Time Overturning Moment Limiting of a Spacecraft Random Vibration Test Using an Analog Hardware Network

Michael B. Van Dyke
Pete Landry

June 4, 2014

Spacecraft Mechanical Section/Dynamic Environments &
Aerospace Nuclear Safety Engineering

The research described in this publication was carried out at the Jet Propulsion Laboratory, California Institute of Technology, under a contract with the National Aeronautics and Space Administration. . Government sponsorship acknowledged.

© 2014 California Institute of Technology

National Aeronautics and Space Administration

Background

- Soil Moisture Active and Passive (SMAP) spacecraft ("Observatory") to undergo random vibe verification

- Model predicted exceedance of LDS V994 shaker overturning moment capability of 97,000 in-lbs for axial configuration
  - Dynamic modal cross-coupling is primary contributor to overturning moment (static c.g. offset is very small contributor)

- Mitigation options
  1. Purchase head expander guide to boost shaker capability: $$$
  2. Transport Observatory to facility with head expander guide: $$$ +
  3. Apply some method of test input limitation ✓

Real-Time Limitation of Instantaneous Peak Moment

- Precedence for calculating instantaneous overturning moment
  - Mars Science Laboratory Descent Stage random vibration 2010, R. Nayeri, JPL (2011 SC & LV Dynamics Environments Workshop)
  - Post-processing time history calculation of resultant peak moment from individual load cell measurements for monitoring purposes

- Motivation for real-time moment limiting of SMAP test
  - Allow controller to limit input based on actual moment observable
    - Overturning moment not directly observable from force or acceleration
  - Precise control to prevent over-testing while minimizing under-testing

Calculation of Peak Total Overturning Moment

- Overturning moment about origin (from multiple point forces):

$$M = \sum_{n=1}^{N} \Delta r_n \times F_n$$

$$\rightarrow M_x = \sum_{n=1}^{N} \left(\Delta y_n F_{zn} - \Delta z_n F_{yn} \right)$$

$$\rightarrow M_y = \sum_{n=1}^{N} \left(\Delta z_n F_{xn} - \Delta x_n F_{zn} \right)$$

- Simplification for constant Δz:

$$M_{x\_total} = \sum_{n=1}^{N} \left(\Delta y_n F_{zn} \right) - \Delta z \sum_{n=1}^{N} F_{yn} + dy(mg)$$

$$M_{y\_total} = \Delta z \sum_{n=1}^{N} F_{xn} - \sum_{n=1}^{N} \left(\Delta x_n F_{zn} \right) + dx(mg)$$

$$\left| M_{xy\_total} \right| = \sqrt{M_{x\_total}^2(t) + M_{y\_total}^2(t)}$$

Dynamic normal force component
Dynamic shear force component
Static moment

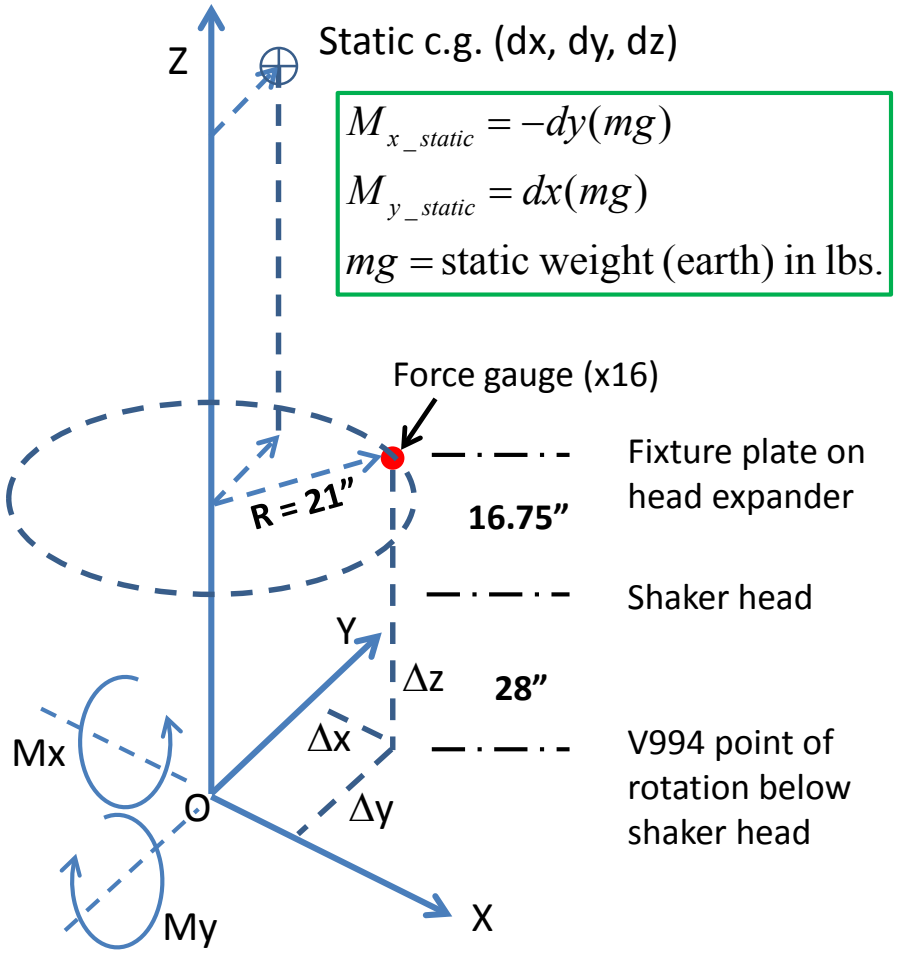

Block Diagram of Moment Limiting Implementation

16 force gages at base I/F

Mx(t), My(t) = weighted sums of Fzn(t)

controller

F1-XYZ - F16-XYZ → **Network of summing and scaling amps** → **Mx time history** / **My time history** → **Mx PSD** / **My PSD** → **Limited input acceleration curve**

Mx, My limit curves → **Mx PSD** / **My PSD**

Manually calculated based on previous test run Mx(t), My(t)

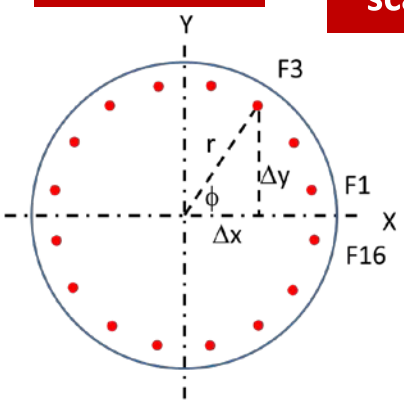

$$M_x = \sum_{n=1}^{N} (\Delta y_n F_{zn}) - \Delta z \sum_{n=1}^{N} F_{yn}$$

$$M_y = \Delta z \sum_{n=1}^{N} F_{xn} - \sum_{n=1}^{N} (\Delta x_n F_{zn})$$

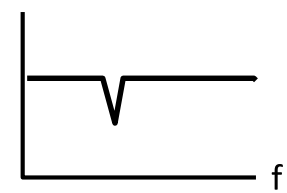

Moment Arm Weighting Values for N=16 Force Gauges

Radius multipliers for dx and dy

Gage No.	ϕ (deg) re X-Axis	Δx	Δ y
1	11.25	0.981	0.195
2	33.75	0.831	0.556
3	56.25	0.556	0.831
4	78.75	0.195	0.981
5	101.25	-0.195	0.981
6	123.75	-0.556	0.831
7	146.25	-0.831	0.556
8	168.75	-0.981	0.195
9	191.25	-0.981	-0.195
10	213.75	-0.831	-0.556
11	236.25	-0.556	-0.831
12	258.75	-0.195	-0.981
13	281.25	0.195	-0.981
14	303.75	0.556	-0.831
15	326.25	0.831	-0.556
16	348.75	0.981	-0.195

dz = 44.75”
R = 21.0 “

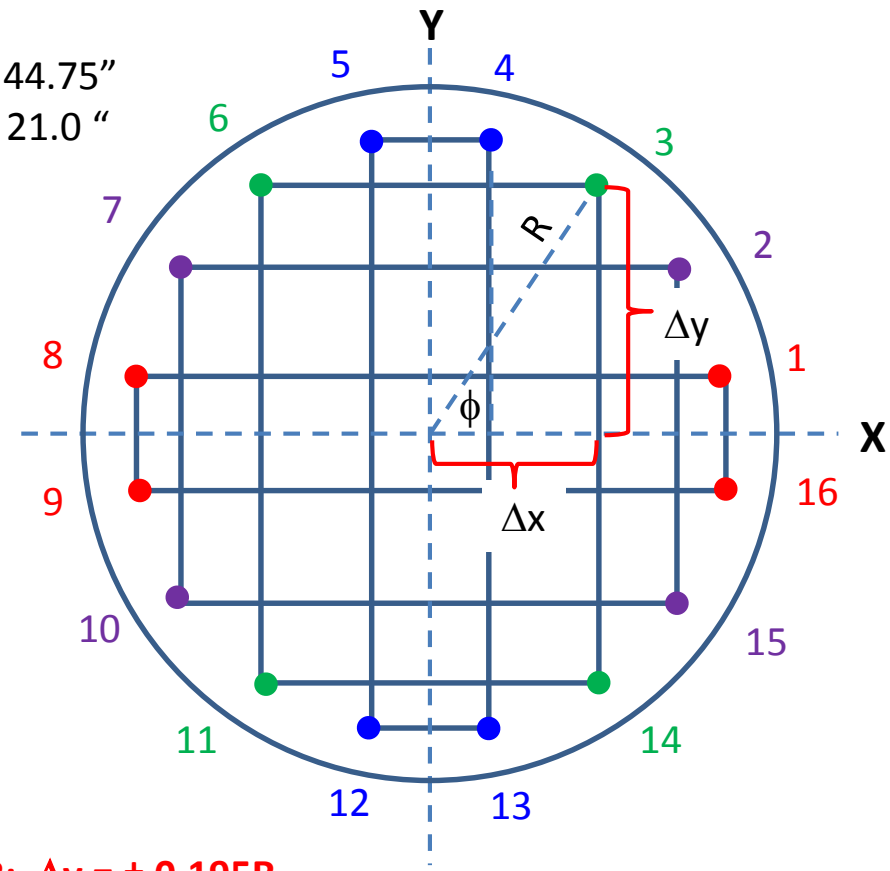

Group 1: Gauges 1, 8, 9, 16; Δx = ± 0.981R; Δy = ± 0.195R
Group 2: Gauges 2, 7, 10, 15; Δx = ± 0.831R; Δy = ± 0.556R
Group 3: Gauges 3, 6, 11, 14; Δx = ± 0.556R; Δy = ± 0.831R
Group 4: Gauges 4, 5, 12, 13; Δx = ± 0.556R; Δy = ± 0.831R

Preliminary Notional Analog HW Network

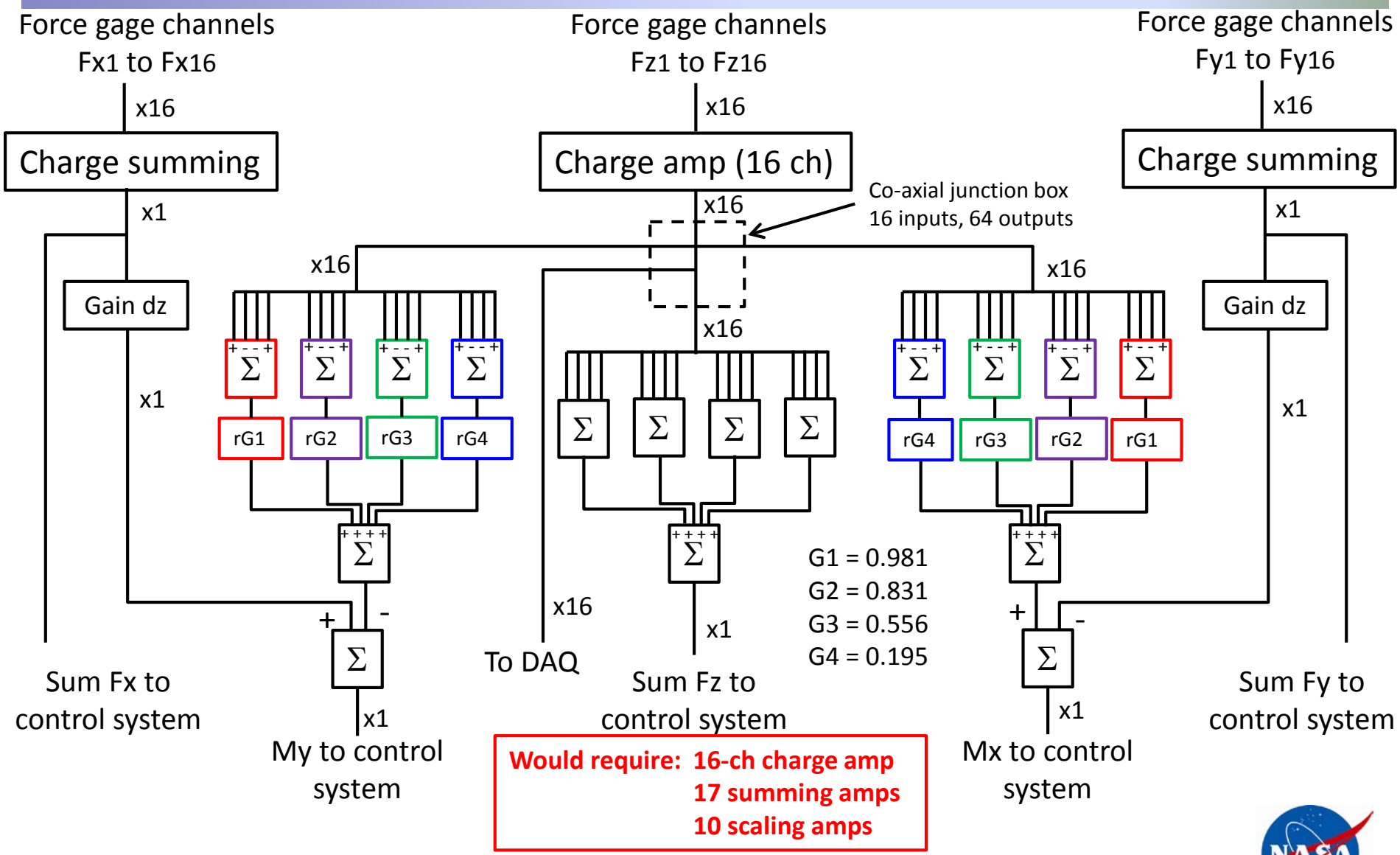

Would require: 16-ch charge amp
17 summing amps
10 scaling amps

Multi-Function Amps Reduced Number of HW Items

Multi-Function Amplifiers

2 - Kistler 5017A Multi-channel Charge Amps

- 8-channel charge amp for force gauges
- 4-channel summing functions

$\Sigma Fz = \frac{1}{4}(Fz1 + Fz2 + Fz3 + Fz4)$

$Mx = \frac{1}{4}(Fz1 + Fz2 - Fz3 - Fz4)$

$My = \frac{1}{4}(-Fz1 + Fz2 + Fz3 - Fz4)$

2 - Kistler 5217 Summing Amps

- 4-channel summing functions

$\Sigma Fz = Fz1 + Fz2 + Fz3 + Fz4$

$Mx = \frac{1}{2}(Fz1 + Fz2 - Fz3 - Fz4)$

$My = \frac{1}{2}(-Fz1 + Fz2 + Fz3 - Fz4)$

Single Function Amplifiers

SRS SIM980 Summing Amplifier

- $y = \pm x1 \pm x2 \pm x3 \pm x4$

SRS SIM983 Scaling Amplifier

- Single channel
- Gain: 0.01 to 19.99

Analog Moment Limiting HW Network – Final Implementation

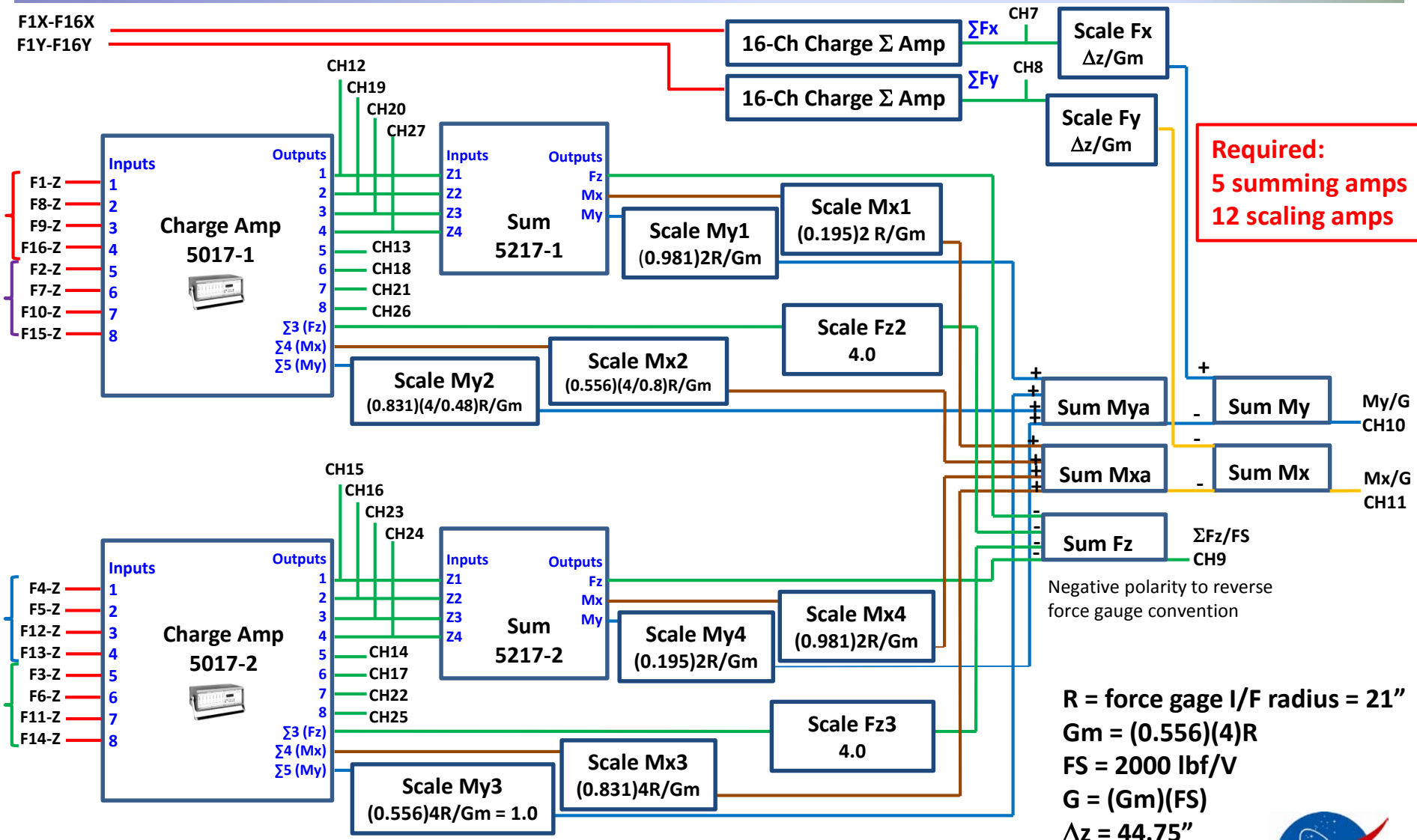

Determining Overturning Moment Spectral Limit

- Challenge: Find a spectral $S_{Mxx}(f)$ and $S_{Myy}(f)$ limit that will result in limiting the instantaneous resultant $M_{xy}(t)$ peak value

- Requires statistical prediction of resultant time history peak from quadrature spectral averages

- Use measured data from low level runs to calibrate prediction
  - Calculate statistical relationship between $S_{Mxx}(f)$ and $S_{Myy}(f)$ spectral averages and $M_{xy}(t)$ time history peak
  - Scale this relationship to predict future runs

Determining Overturning Moment Limits

- Pre-calculated static overturning moment components: Mx_0, My_0, Mxy_0
- Calculate statistics from previous low-level run measurments

$$\left|Mxy_0 + Mxy(t)\right| = \sqrt{\left[Mx_0 + Mx(t)\right]^2 + \left[My_0 + My(t)\right]^2}$$

$$Peak_{Mxy} = \max\left(\left|Mxy_0 + Mxy(t)\right|\right)$$

$$\sigma_{Mx}, \sigma_{My}$$

$$\sigma_{Mxy} = \sqrt{\frac{\sum_{n-1}^{N}\left[\left(Mx(n) - \mu_{Mx}\right)^2 + \left(My(n) - \mu_{My}\right)^2\right]}{N-1}}$$

- Prediction of unlimited $Peak'_{Mxy}$ for next level run

$$scale = 10^{\frac{next\_level - prev\_level(dB)}{20}}$$

$$\sigma'_{Mxy} = scale\left(\sigma_{Mxy}\right)$$

$$k = \text{statistical envelope factor}$$

Determining Overturning Moment Limits (cont.)

- Numerical simulation with trial limit profile for $S_{Mxx}(f)$ and $S_{Myy}(f)$

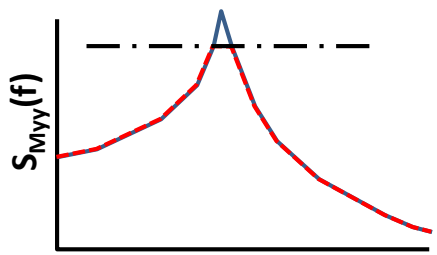

$\sigma_{My\_unlimited}$, $\sigma_{My\_limited}$ *

- Calculate predicted $Peak'_{Mxy}$ with trial limit profile

$$Peak'_{Mxy} = \sqrt{Mx_0^{\,2} + My_0^{\,2}} + k\sigma_{Mxy}\left(\frac{\sigma_{My\_\mathrm{Limited}}}{\sigma_{My\_\mathrm{Unlimited}}}\right)(scale)$$

  - Use dominant component σ_{Mx} or σ_{My} for limit estimate
  - Assumes σ_{Mxy} scales proportionally as σ_{Mx} or σ_{My}

- Re-iterate to find limit profile that results in desired peak limit
- Apply selected limit profile to SMxx(f) and SMyy(f) for next test run
- Adjust as necessary based on subsequent intermediate runs

Overturning Moment Limiting Validation

Mass mock-up with offset mass plate attached on top

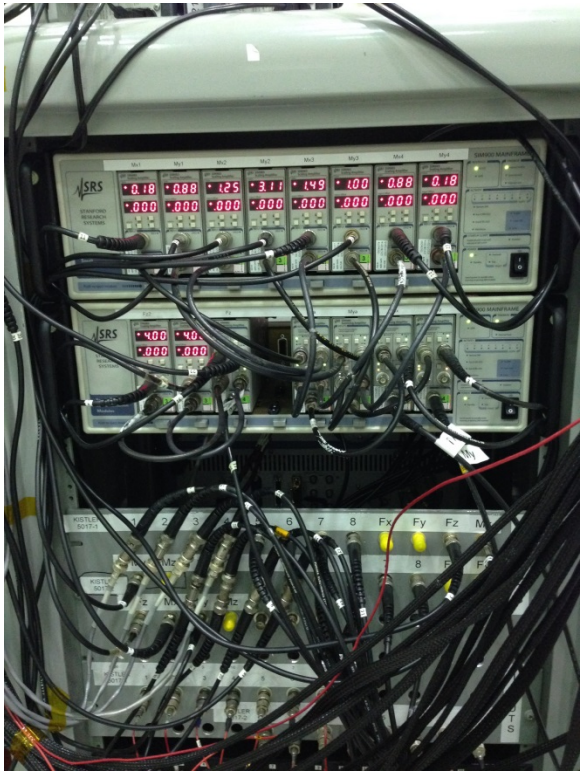

Rack-mounted summing and scaling amplifiers

Charge and scaling amplifiers

Mass Mock-Up Validation Results

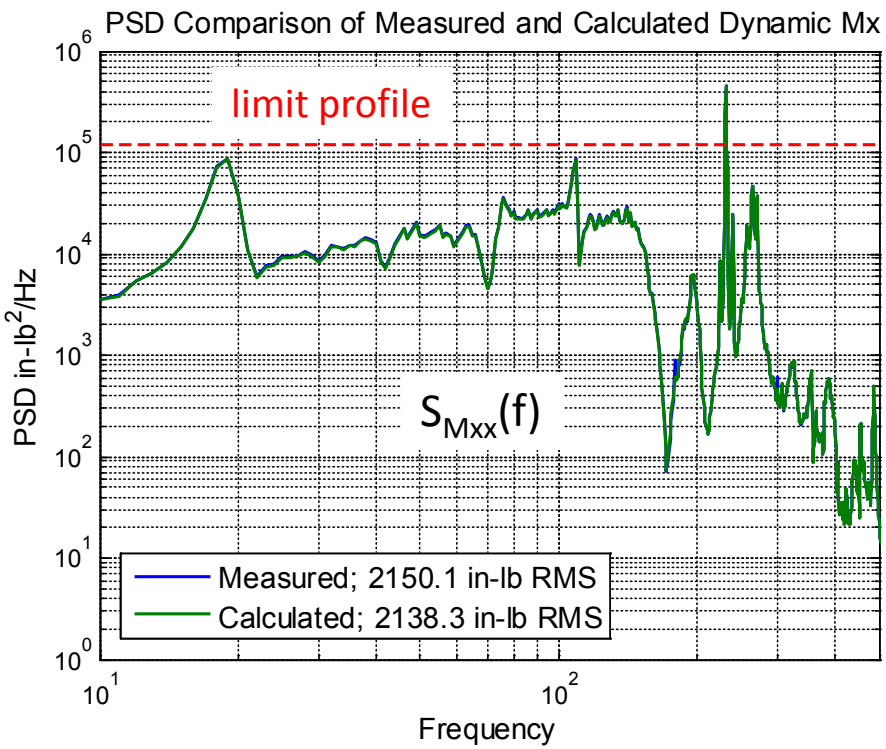

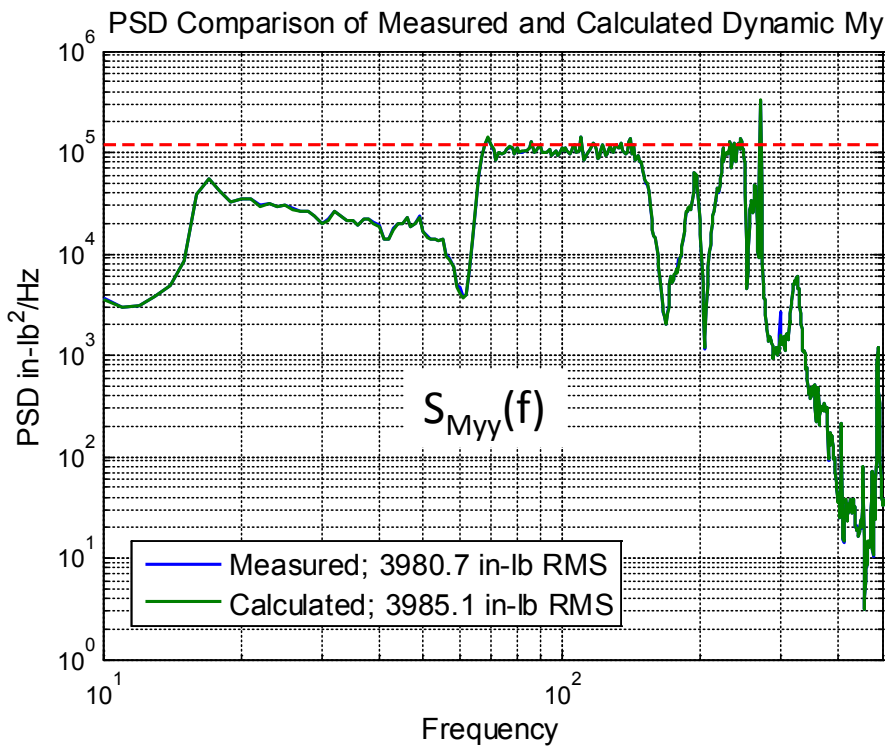

- Target peak limit = 20,000 in-lb; Achieved peak limit = 19,892 in-lb
- Near-perfect spectral and time history comparison between measured moment components and theoretically calculated from force inputs

Flight Observatory Test Results

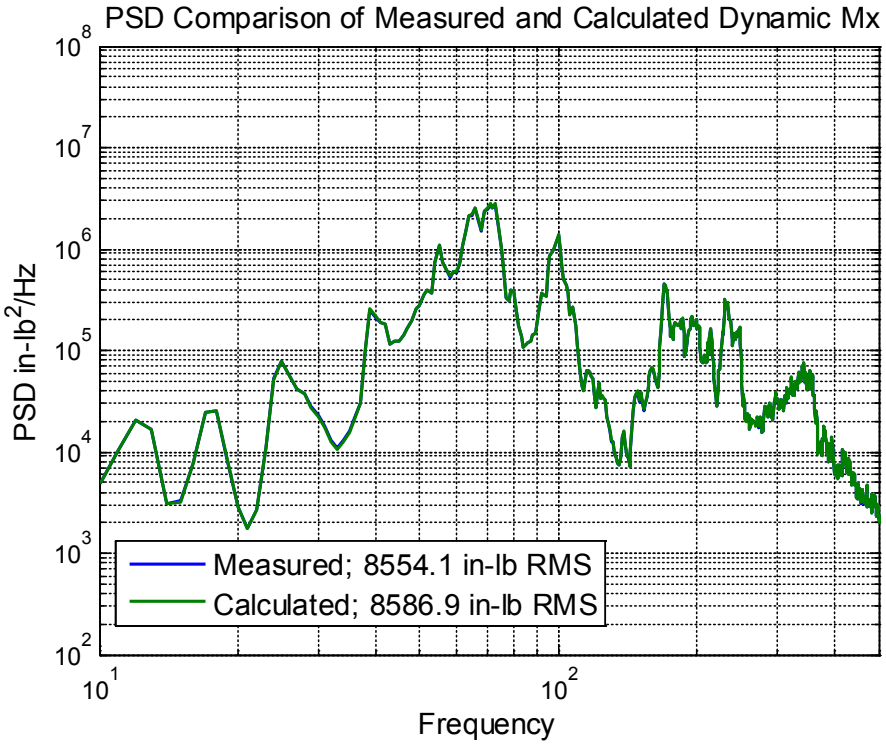

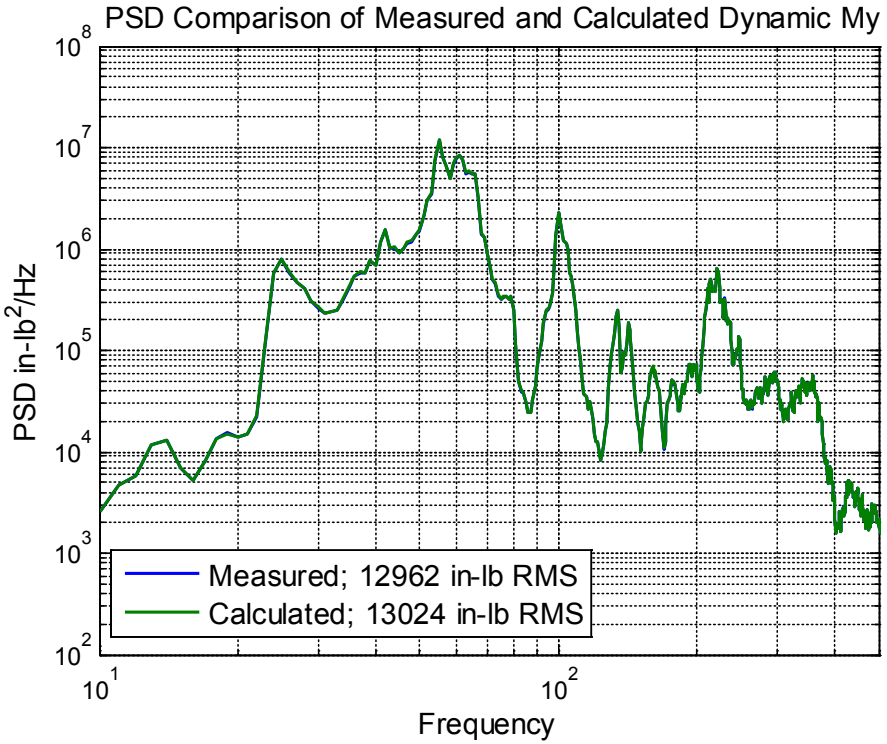

- Target peak limit = 90,000 in-lb; Actual peak limit = 60,513 in-lb
- Spectral reduction due to force limiting also prevented overturning moment from approaching limit

Flight Observatory Test Results (cont.)

Comparison of Predictions vs Measurements

Run Level (dB)	Current Meas.	Next Run Prediction	0 dB Run Prediction
-20	9387	12367	92896*
-18	7625	18563	71606
-12	19788	23840	65259
-9	20708	34043	67159
-6	28518	44680	62795
-3	43078	62304	62304
0	60513		

* Force limiting applied for -18 dB and successive runs
k = 4.0 assumed for predictions

Polar Trace of 0 dB Run Resultant Moment

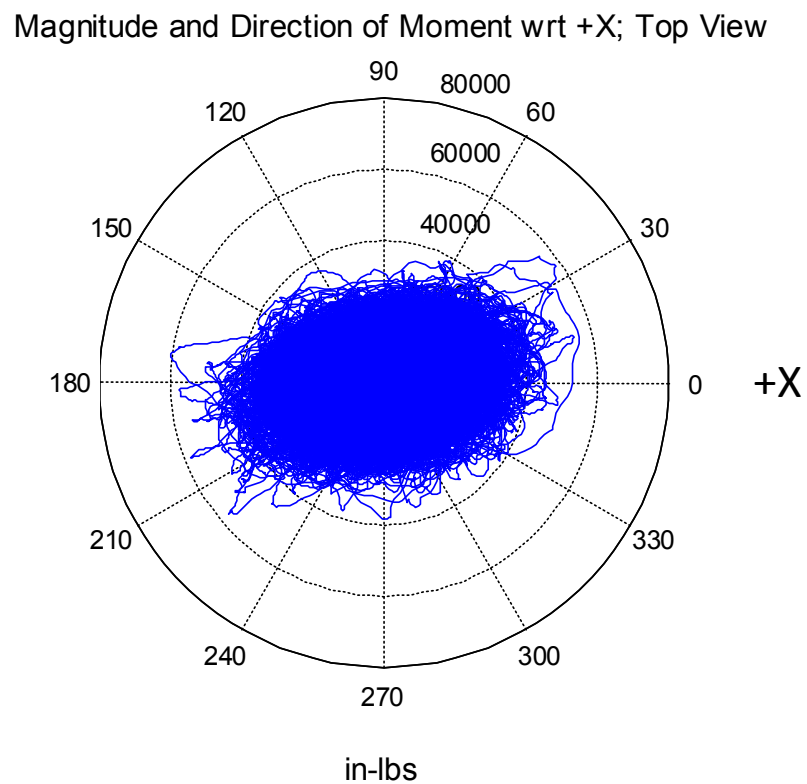

Conclusions

- Analog hardware implementation of real-time overturning moment limiting successfully applied for SMAP Observatory random vibration test
  - Output from analog HW network matched theoretical calculations
  - Peak limiting functionality validated with mass mock-up test
  - Overturning moment accurately measured in real-time for Observatory test
    - Overturning moment limit not reached during Observatory test due to force limiting
- Considerations for future development
  - Find analog implementation of squaring function for moment resultant
    - Enable hardware derivation of moment resultant
  - Explore capability and reliability of replacing hardware with real-time software implementation
    - Phasing and data throughput challenges

Acknowledgements

- Ben Tsoi, JPL
  - Test conductor for SMAP Observatory random vibration test
- Reza Nayeri, JPL
  - Prior work and technical consultation

BACKUP

Moment Implementation

$$M_x = -\sum_{n=1}^{N}(\Delta y_n F_{zn}) - \Delta z \sum_{n=1}^{N} F_{yn} \qquad M_y = \Delta z \sum_{n=1}^{N} F_{xn} + \sum_{n=1}^{N}(\Delta x_n F_{zn})$$ (Reversed polarity for F_{zn})

(0.556)(4)r/Gm= 1.0

$$\begin{aligned} M_x = -\Big[& \tfrac{1}{2}(+F_{z1} + F_{z8} - F_{z9} - F_{z16})(0.195)(2)r \\ & + \tfrac{1}{4}(+F_{z2} + F_{z7} - F_{z10} - F_{z15})(0.556)(4)r \\ & + \tfrac{1}{4}(+F_{z4} + F_{z5} - F_{z12} - F_{z13})(0.981)(2)r \\ & + \tfrac{1}{2}(+F_{z3} + F_{z6} - F_{z11} - F_{z14})(0.831)(4)r \Big] \\ & - \Delta z \sum_{n=1}^{N} F_{yn} \end{aligned}$$

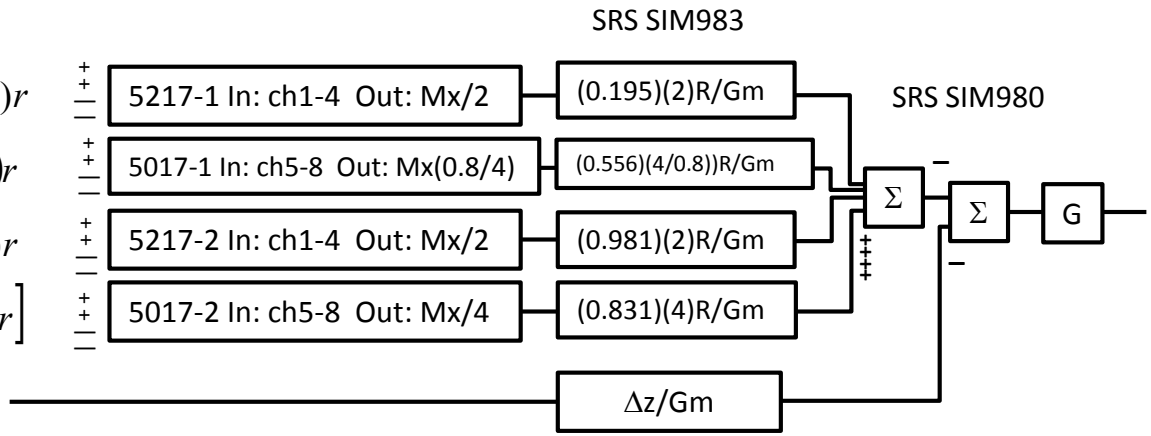

$$\begin{aligned} M_y = \Delta z \sum_{n=1}^{N} F_{xn} & \\ - \Big[& \tfrac{1}{2}(-F_{z1} + F_{z8} + F_{z9} - F_{z16})(0.981)(2)r \\ & + \tfrac{1}{4}(-F_{z2} + F_{z7} + F_{z10} - F_{z15})(0.831)(4)r \\ & + \tfrac{1}{4}(-F_{z4} + F_{z5} + F_{z12} - F_{z13})(0.195)(2)r \\ & + \tfrac{1}{2}(-F_{z3} + F_{z6} + F_{z11} - F_{z14})(0.556)(4)r \Big] \end{aligned}$$

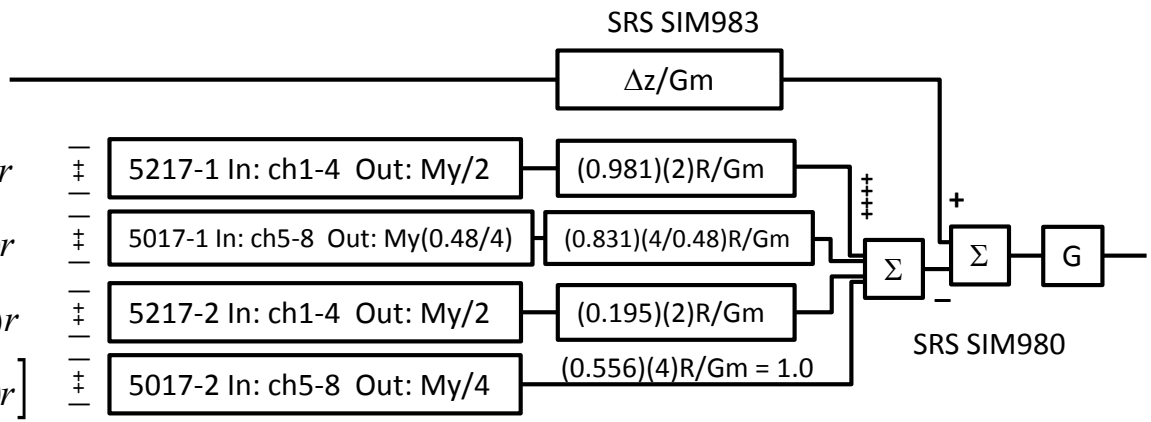

1) Kistler 5017-1 Mx and My scaling is set to (0.8/4)Mx and (0.48/4)My
2) Kistler 5017-2 Mx and My scaling is set to (1/4)Mx and (1/4)My
3) Kistler 5017-2 Mx and My scaling is set to (1/4)Mx and (1/4)My
4) Kistler 5017-2 Mx and My scaling is set to (1/4)Mx and (1/4)My

Gm = (0.556)(4)R = 46.70 (for R=21 in.)
Gf = Force gage scale = 2000 lbf/V
G = Gm x Gf = 34902 in-lbf/V

Fz Sum Implementation

(Reversed polarity for F_{zn})

$$-\sum_{n=1}^{16} F_{zn} = -\sum_{n=1,8,9,16} F_{zn} - \frac{1}{4}\left[\sum_{n=2,7,10,15} F_{zn}\right](4) - \sum_{n=3,6,11,14} F_{zn} - \frac{1}{4}\left[\sum_{n=4,5,12,13} F_{zn}\right](4)$$

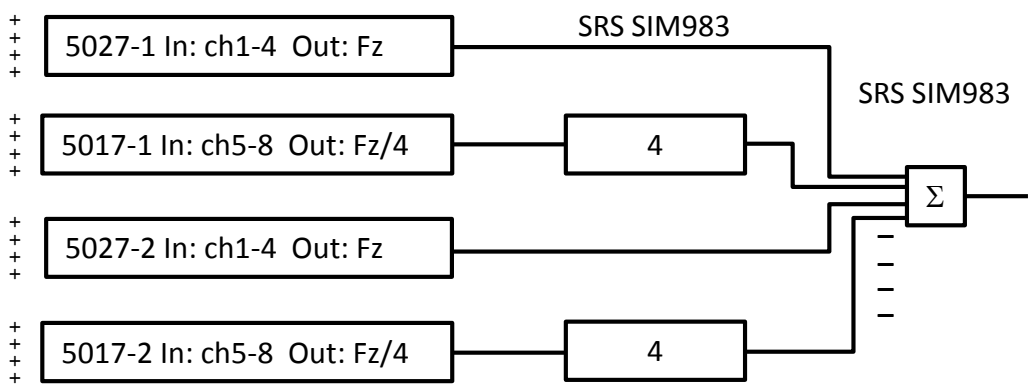

Moment Functions on Kistler 5017A and 5217

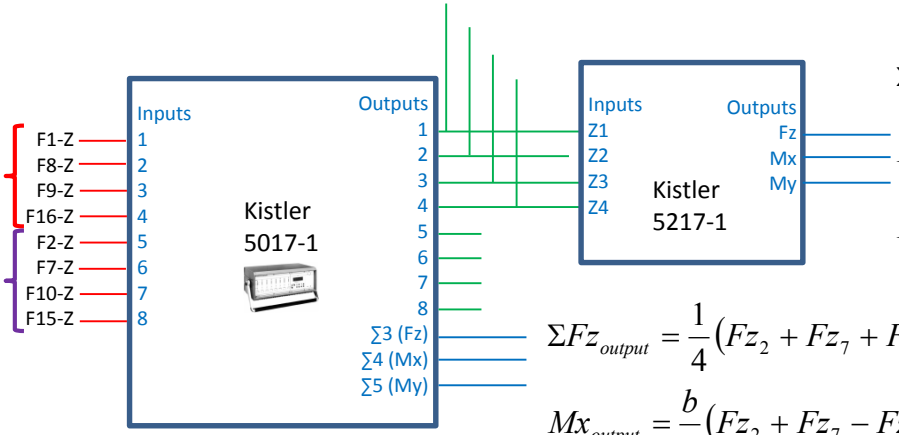

$$\Sigma Fz_{output} = \frac{1}{2}\left(Fz_1 + Fz_8 + Fz_9 + Fz_{16}\right)$$

$$Mx_{output} = \frac{b}{2}\left(Fz_1 + Fz_8 - Fz_9 - Fz_{16}\right)$$

$$My_{output} = \frac{a}{2}\left(-Fz_1 + Fz_8 + Fz_9 - Fz_{16}\right)$$

$$\Sigma Fz_{output} = \frac{1}{4}\left(Fz_2 + Fz_7 + Fz_{10} + Fz_{15}\right)$$

$$Mx_{output} = \frac{b}{4}\left(Fz_2 + Fz_7 - Fz_{10} - Fz_{15}\right)$$

$$My_{output} = \frac{a}{4}\left(-Fz_2 + Fz_7 + Fz_{10} - Fz_{15}\right)$$