Deducing Electronic Unit Internal Response during a Vibration Test Using a Lumped Parameter Modeling Approach

Michael B. Van Dyke
Jet Propulsion Laboratory, California Institute of Technology, Pasadena, California

ABSTRACT

During random vibration testing of electronic boxes there is often a desire to know the dynamic response of certain internal printed wiring boards (PWBs) for the purpose of monitoring the response of sensitive hardware or for post-test forensic analysis in support of anomaly investigation. Due to restrictions on internally mounted accelerometers for most flight hardware there is usually no means to empirically observe the internal dynamics of the unit, so one must resort to crude and highly uncertain approximations. One common practice is to apply Miles Equation, which does not account for the coupled response of the board in the chassis, resulting in significant over- or under-prediction. This paper explores the application of simple multiple-degree-of-freedom lumped parameter modeling to predict the coupled random vibration response of the PWBs in their fundamental modes of vibration. A simple tool using this approach could be used during or following a random vibration test to interpret vibration test data from a single external chassis measurement to deduce internal board dynamics by means of a rapid correlation analysis. Such a tool might also be useful in early design stages as a supplemental analysis to a more detailed finite element analysis to quickly prototype and analyze the dynamics of various design iterations. After developing the theoretical basis, a lumped parameter modeling approach is applied to an electronic unit for which both external and internal test vibration response measurements are available for direct comparison. Reasonable correlation of the results demonstrates the potential viability of such an approach. Further development of the preliminary approach presented in this paper will involve correlation with detailed finite element models and additional relevant test data.

KEY WORDS: lumped parameter model, multi-degree-of-freedom, random vibration response, printed wiring board vibration, test correlation

SYMBOLS

K_n = mechanical stiffness constant for *nth* degree of freedom oscillator
R_n = mechanical resistance constant for *nth* degree of freedom oscillator
M_0 = total mass of the unit
M_n = total mass of structural element *n*
m_n = effective modal mass of element *n*
m_{res} = residual mass
α_n = modal mass participation factor of element *n*
f_n = fundamental resonance response frequency of element *n*
Q_n = quality factor for fundamental resonance response of element *n*
ω = angular excitation frequency
ω_n = fundamental angular resonance frequency of element *n*

 Copyright 2014 California Institute of Technology. Government sponsorship acknowledged

During random vibration testing of electronic boxes there is often a desire to know the dynamic response of certain internal printed wiring boards (PWBs) for the purpose of monitoring the response of sensitive hardware or for post-test forensic analysis in support of anomaly investigation. Due to restrictions on internally mounted accelerometers for most flight hardware there is usually no means to empirically observe the internal dynamics of the unit, so one must resort to crude and highly uncertain approximations. One common practice is to apply Miles Equation, which does not account for the coupled response of the board in the chassis, resulting in significant over- or under-prediction.

This paper explores the application of simple multiple-degree-of-freedom lumped parameter modeling to predict the coupled random vibration response of the PWBs in their fundamental modes of vibration. A simple tool using this approach could be used during or following a random vibration test to interpret vibration test data from a single external chassis measurement to deduce internal board dynamics by means of a rapid correlation analysis. One scenario of such an application is to use the tool to monitor the response of a sensitive PWB during a random vibration test of a flight electronics unit. Based on a lumped parameter model quickly created and correlated with chassis response test data from a low level test run, estimates of the PWB response could be made to provide an assessment of the available margin at full input level. Such a tool might also be useful in early design stages as a supplemental analysis to a more detailed finite element analysis to quickly prototype and analyze the dynamics of various design iterations. This paper presents preliminary development of this methodology and a demonstration of its viability by applying it to a case for which test data are available for direct comparison with model predictions.

BASIC APPROACH

Lumped parameter modeling is employed for a wide range of engineering problems to simplify the representation of the dynamics of a spatially distributed structural/mechanical system into a system of discrete mass-spring-dashpot oscillators. This approximation allows the problem to be expressed mathematically as a reduced system of readily solvable ordinary differential equations, allowing rapid parametric iterations for understanding the relevant physics of a problem. The range of utility for a lumped parameter approach is limited to the extent to which the kinetic, potential and dissipative energy operative in the dynamics of a distributed system can be approximated with equivalent discrete or lumped mass, stiffness and damping parameters. For the multi-modal dynamics of a structure, this requires that each of the primary modes, associated with most of the dynamic energy in the system, be represented by a discrete degree-of-freedom oscillator.

The concept of using discrete degree-of-freedom oscillators to represent the normal modes of a structure was developed in the early 1970's (Bamford et al, 1971). An underlying concept for the implementation of force limited random vibration testing (Scharton, 1997), it provides intuitive insight into the dynamic coupling of adjacent structural elements as a function of their relative individual modal frequencies, masses and quality factors (Q). The lumped parameter modeling approach presented in this paper is an adaptation of this concept for representing the

 Copyright 2014 California Institute of Technology. Government sponsorship acknowledged

dynamics of an electronics unit consisting of a series of PWBs parallel mounted to a common chassis – a typical configuration in the aerospace industry**.**

Applying the lumped parameter representation to an electronics unit, the chassis is modeled as a base oscillator supporting a series of smaller oscillators representing PWBs. An operating assumption is that the participating mass in the first *N* primary modes of the electronics unit base-driven in a direction normal to the PWBs corresponds to the participating masses of the chassis and *N*-1 PWBs. The *N* DOF discrete oscillator rendering takes the appearance of an "asparagus patch" model (Scharton, 1995) as seen in **Figure 1**.

The dynamic response of the base oscillator couples with the responses of the load oscillators, such that the resulting spectral shape of the base oscillator dynamic response is a unique signature of the particular combination of masses, fundamental resonances and damping values. This is characteristic of the typical peaks and notches seen in test data measured from an accelerometer typically mounted near top corner of the chassis during a random vibration test, as seen in **Figure 2**. Using known or estimated physical properties of the electronics unit and its constituent PWBs, a lumped parameter model is quickly constructed and tuned such that the spectral response curve of the base mass closely approximates the test measured signature spectral curve of the chassis response test. Approximations of the responses of internally mounted PWBs are then deduced from the dynamic responses of the load masses in the model.

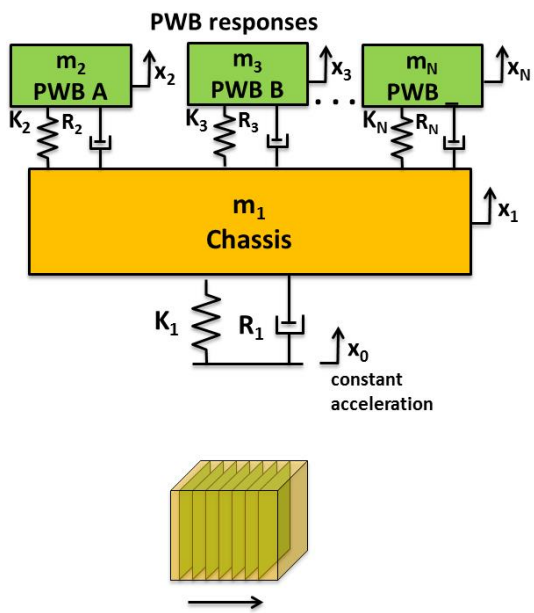

Figure 1: "Asparagus patch" lumped parameter dynamic representation of an electronics unit chassis and PWBs

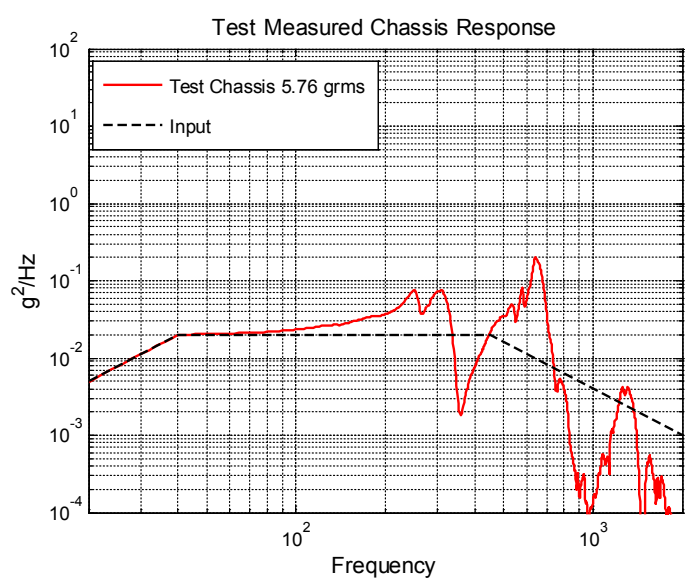

Figure 2: Typical random vibration test acceleration response of a chassis measured by an externally mounted accelerometer. (The test data have been normalized to the nominal input spectrum.)

 Copyright 2014 California Institute of Technology. Government sponsorship acknowledged

ASSUMPTIONS AND LIMITATIONS

Before proceeding with a detailed development of the lumped parameter approach for modeling the dynamics of an electronic unit, it must be pointed out that its application is premised on the following assumptions:

1) The dynamics represent a fixed base constant acceleration excitation of an electronic unit in a direction normal to the mounted circuit boards.

2) The circuit boards are independently clamped or simply supported, at a minimum along two edges to parallel sides of the chassis.

3) Damping values are assigned individually to structural elements (circuit boards, chassis) rather than modal damping.

4) Lumped parameter model elements approximate the center of gravity response of the structural elements in their primary mode of vibration.

While these are reasonable assumptions for a large class of electronic units, they must be evaluated before a decision can be made whether or not lumped parameter modeling is a viable approach. In addition, some of the limitations of the modeling approach are recognized:

1) The model approximates only the primary or fundamental modal response of a structural element.

2) The model is restricted to linear dynamic response.

3) While the presence of an internally vibrating PWB can be noted from a corresponding force reaction notch in the chassis response spectral data, there is some ambiguity in discerning the specific identity of the PWB responding at that frequency.

4) The methodology presented herein is still under development, and without rigorously developed implementation rules and parameters, application is somewhat of an art. Further development of the theoretical basis and correlation with detailed finite element models and test data are needed to bring this methodology to technical maturity.

MODEL DEVELOPMENT

In quantizing the dynamic response of a structure or assembly of substructures with a finite number of discrete DOF oscillators representing the normal modes of the structure, it is important to understand the concepts of effective and residual mass, developed in the previously cited works by Bamford et al (1971), with a helpful tutorial summary provided by Scharton (1997). For a particular structural mode, the effective modal mass is that equivalent portion of the total structural mass that actually participates in the modal resonance response. For the *nth* mode, the ratio of effective modal mass m_n to the total mass M_n of the structure, denoted here and in **Equation 1** as the modal participation factor α_n, is related to the mode shape of the structure,

 Copyright 2014 California Institute of Technology. Government sponsorship acknowledged

responding in the same direction as the excitation, with respect to its support interfaces and the distribution of mass over the structure.

At a given frequency of interest, the effective mass for all modes responding in the direction of the excitation is equal to the sum of the effective masses of all of the modes whose resonance frequencies lie below the frequency of interest. The difference between the total mass of the structure and the total effective mass at the frequency of interest is denoted the residual mass, which is considered to "ride along" in rigid body motion with the input excitation. Asymptotically, the sum of the effective mass for all modes responding in the direction of excitation is equal to the total mass of the structure, with the residual mass reducing to zero.
The approach employed in this work discretizes the structure of an electronics unit into an assembly of substructures or structural elements consisting of the chassis and PWBs, each constituting an individual DOF. It is therefore convenient to define the modal participation factor α_n for a given mode as a fraction of the total mass of the corresponding structural element, rather than the total unit mass. This convention lends itself to a modular construction of a unit model based on individual PWB characteristics determined from standalone models, tests and measurements. The effective modal mass for each *nth* mode corresponding to the *nth* structural element is then given by

$$m_n = \alpha_n M_n . \tag{1}$$

The total mass of the chassis is considered to be equal to the total mass of the unit, M_0, minus the sum of the included effective modal masses supported by the chassis. This means that the chassis mass includes the residual mass of the attached PWBs not participating in their modal responses, as well as that of any other hardware not represented in the model. The effective modal mass of the chassis, or the source mass, is thus given by

$$m_1 = \alpha_1 M_1 = \alpha_1 \left(M_0 - \sum_{n=2}^{N} m_n \right). \tag{2}$$

A necessary approximation for using this modular approach is that the entire interface between a PWB structural element and the chassis can be abstracted to a single node aligned with both centers of mass. This is an approximation that can be reasonably justified for many electronic units populated by full span PWBs connected at a minimum along two parallel walls of a chassis, as long as model dynamics are restricted to each structural element's fundamental mode of vibration. For the large majority of dynamic problems, these are the modal responses of interest – particularly in the case of board deflection estimates.

Since the modeling approach applied here is truncated to N DOF including each structural element responding only in its fundamental mode of vibration, the unit residual mass is treated as a discrete quantity, given by

$$m_{res} = M_0 - \sum_{n=1}^{N} m_n . \tag{3}$$

 Copyright 2014 California Institute of Technology. Government sponsorship acknowledged

Table 1 provides a breakdown of key structural elements of an electronics unit and the lumped parameters used to represent the corresponding single DOF oscillator model element.

Table 1: Lumped parameter representation of key structural elements of an electronics unit

Model DOF	Structural Element	Mass	Effective Modal Mass	Fundamental Frequency	Quality Factor
1	Chassis	$M_1 = M_0 - \sum_{n=2}^{N} m_n$	$m_1 = \alpha_1 M_1$	f_1	Q_1
2	PWB 1	M_2	$m_2 = \alpha_2 M_2$	f_2	Q_2
3	PWB 2	M_3	$m_3 = \alpha_3 M_3$	f_3	Q_3
:	:	:	:	:	:
N	PWB N-1	M_N	$m_N = \alpha_N M_N$	f_N	Q_N

The normalized frequency response functions $z_n(\omega)$ for each of the model DOF can be found by solving the linear equation given in **Equation 6** and derived in the Appendix. The shorthand terms used in the linear equation are defined:

$$a_n(\omega) = j\frac{\omega_N}{\omega Q_N} + \left(\frac{\omega_N}{\omega}\right)^2 \tag{4}$$

$$\gamma_n = \frac{m_n}{m_1} \tag{5}$$

$$\begin{vmatrix} 1 - a_1(\omega) - \sum_{n=2}^{N}\gamma_n a_n(\omega) & \gamma_2 a_2(\omega) & \gamma_3 a_3(\omega) & \cdots & \gamma_N a_N(\omega) \\ a_2(\omega) & 1 - a_2(\omega) & 0 & \cdots & 0 \\ a_3(\omega) & 0 & 1 - a_3(\omega) & \cdots & 0 \\ \vdots & \vdots & \vdots & \ddots & \vdots \\ a_N(\omega) & 0 & 0 & \cdots & 1 - a_N(\omega) \end{vmatrix} \begin{vmatrix} z_1(\omega) \\ z_2(\omega) \\ z_3(\omega) \\ \vdots \\ z_N(\omega) \end{vmatrix} = \begin{vmatrix} -a_1(\omega) \\ 0 \\ 0 \\ \vdots \\ 0 \end{vmatrix} \tag{6}$$

A simple algorithm is implemented using a numerical analysis application such as Matlab® to construct the matrices and to solve the linear system of equations corresponding to the chassis

 Copyright 2014 California Institute of Technology. Government sponsorship acknowledged

and any *N-1* PWBs. The parameters given or derived in Table 1 for each DOF provide the input constants to evaluate $a_N(\omega)$ and $\gamma_N(\omega)$. Response PSD predictions are then generated by a frequency by frequency multiplication of the prescribed input acceleration by the square of the magnitude of the corresponding normalized frequency response functions:

$$S_n(f) = S_0(f)\left|z_n(f)\right|^2 \tag{7}$$

Since the input PSD may likely be a test requirement specified only at terminal and inflection frequencies, $S_0(f)$ is a logarithmic interpolation of the specified levels using the desired frequency resolution for the model, which can be chosen to be consistent with test data to be used for comparison.

The assignment of the lumped parameter values given in **Table 1** are based on as much information as is available about the electronics unit and the configuration and properties of its constituent structural elements. For example, the total unit weight and the number, general configuration and weight of each of the full span PWBs can be obtained from drawings, lab measurements, or a structural analysis of the unit.

It is important to note here that with the use of a discrete representation of structural elements in the modeling approach, as described here, the modeling parameters correspond to the respective element's uncoupled dynamic characteristics, not to be compared directly with a finite element model's coupled dynamic characteristics of the integrated unit structure. The desired outcome of the lumped parameter model is an estimation of the dynamic response of the structural elements. The parameter values are only conventions for obtaining those estimates.

Initial assignment of the modal mass participation factors α_n, resonance frequencies f_n and quality factors Q_n are best estimates based on available initial information. These values are then tuned through multiple rapid iterations of the model solution to result in the best match between the model base mass, or chassis response spectrum and the test measured chassis response data from an accelerometer mounted on a corner of the chassis at a height that corresponds to the estimated center of mass for the primary lateral chassis mode for the fixed base configuration. It is important that the accelerometer be mounted on a rigid part of the structure to avoid the "oil canning" effect of local plate responses.

An initial estimate of the mass participation factor for a PWB may be obtained with a finite element modal analysis of the standalone PWB fixed at its supporting edges with representative boundary conditions. Depending on the boundary conditions and the distribution of electronic parts and support hardware, this value can range considerably with values between 0.2 and 0.5. If modeling or other objective information is not available, a reasonable starting value is 0.35.

Estimates of the resonance frequencies and *Qs* of each structural element are obtained empirically, based on the spectral characteristics of the corresponding chassis response test measurement. An *a priori* knowledge of the mass and basic construction of each of the PWBs is helpful in assigning an expected relative order of resonance frequencies. For example, duplicate PWBs, and those with nearly identical mass, construction and mounting details can reasonably be expected to respond at or very near the same resonance frequency. A PWB integrated with a

 Copyright 2014 California Institute of Technology. Government sponsorship acknowledged

heat sink plate can reasonably be expected to respond at a higher resonance frequency than one without, due to its higher bending stiffness to mass ratio.

ILLUSTRATIONS USING A TWO DOF MODEL

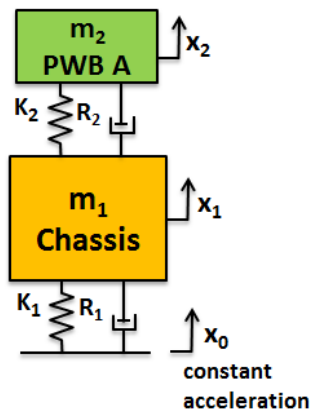

Figure 3: Two DOF model used for illustration.

Before proceeding to an example of applying a lumped parameter approach to estimate the responses of the PWBs of a test unit based on the chassis response measurement, it is instructive to first use a simple base-driven two DOF lumped parameter model to illustrate the influence of model parameters on the spectral shape of the responses. For this illustration a base mass-spring-dashpot oscillator is used to represent a chassis and a single load mass oscillator is used to represent a mounted PWB, as shown in **Figure 3**. The physical behavior is a function of the mutual reaction force of the PWB and chassis upon each other, which is the basis for force limiting in random vibration testing (Scharton, 1997). For the scope of this paper, the discussion will focus on empirical observations rather than the underlying mathematics.

To illustrate the influence of the PWB on the chassis frequency response shape as a function of the PWB resonance frequency f_2 with respect to the chassis resonance frequency f_1, four cases are illustrated in **Figure 4** for a typically small unit with a PWB/chassis mass ratio of 1/10. The individual Qs of the PWB and chassis are chosen to be 25 and 10, respectively. The individual resonance frequency f_1 of the chassis oscillator is 500 Hz, while the individual resonance frequency f_2 of the PWB oscillator is varied for four cases, where the ratio f_2/f_1 is 0.5, 0.8, 1.0 and 1.5. The influence of the PWB response upon the chassis response is seen as a notch in the chassis response, with the frequency of the notch minimum corresponding to the uncoupled resonance frequency of the PWB, f_2. The relative influence of the PWB in terms of the overall magnitude of the notch is seen to increase as a function of the proximity of the two individual resonance frequencies, as can be seen in the case of $f_2/f_1 = 1.0$ in **Figure 4c**. In practice, since the resonance frequency of the PWB can be deduced from the notch frequency, an uncoupled resonance frequency for the chassis can be inferred from the corresponding shape of the chassis response curve with respect to the PWB resonance frequency.

To illustrate the effect of the mass ratio between the PWB and the chassis m_2/m_1, the same four cases used in the previous illustration, but the mass ratio is changed from 1/10 to 1/30, as would be the case for a large electronics unit. All other parameters are kept the same. A comparison of the results in **Figure 4a-d** with those in Figure **5a-d** clearly show how the relative influence of the PWB upon the chassis response in terms of notch magnitude and depth decreases with a proportional decrease in mass ratio. In practice, with an a priori knowledge of the masses of the unit and the PWB, along with an inferred chassis resonance frequency, the chassis response curve is used to tune the respective mass participation factors of the PWB and chassis. It is important that these values stay within a reasonable range consistent with the configuration of the hardware.

 Copyright 2014 California Institute of Technology. Government sponsorship acknowledged

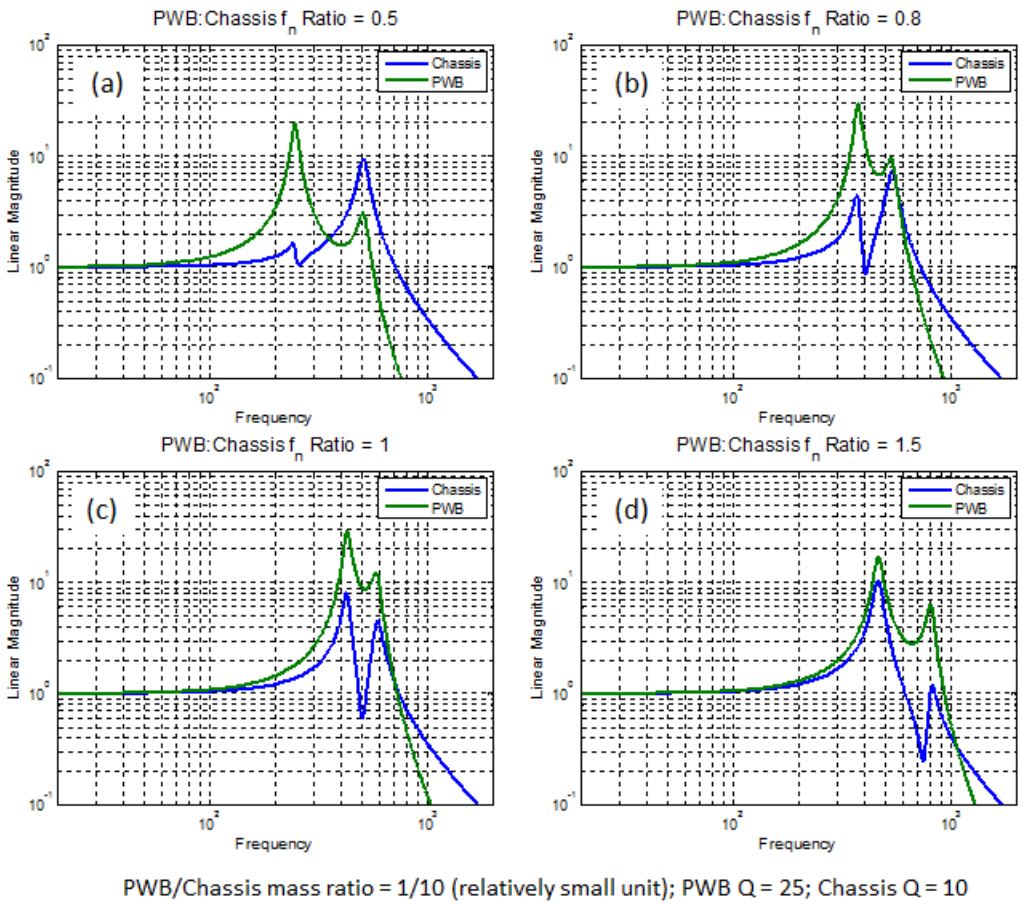

Figure 4: Simple Two DOF model illustration of the parametric effect of the proximity of the resonance frequenciesof the two constituent uncoupled model elements f_1 and f_2: a) $f_2/f_1 = 0.5$; b) $f_2/f_1 = 0.8$; c) $f_2/f_1 = 1.0$; d) $f_2/f_1 = 1.5$

To illustrate the effect of the PWB Q upon the chassis response curve, **Figure 6** shows four cases where the PWB Q is set at 5, 10, 15 and 30, while the chassis Q is held at 10. The m_2/m_1 ratio is 1/10 and the f_2/f_1 ratio is held at 0.8 for all four cases. As the PWB Q increases, the influence can be seen as an increase in notch magnitude and depth. A heuristic gage of the PWB Q is the relative gradient of the notch slope furthest from the chassis resonance frequency. The gradient is observed to be proportional to the magnitude of the PWB Q.

 Copyright 2014 California Institute of Technology. Government sponsorship acknowledged

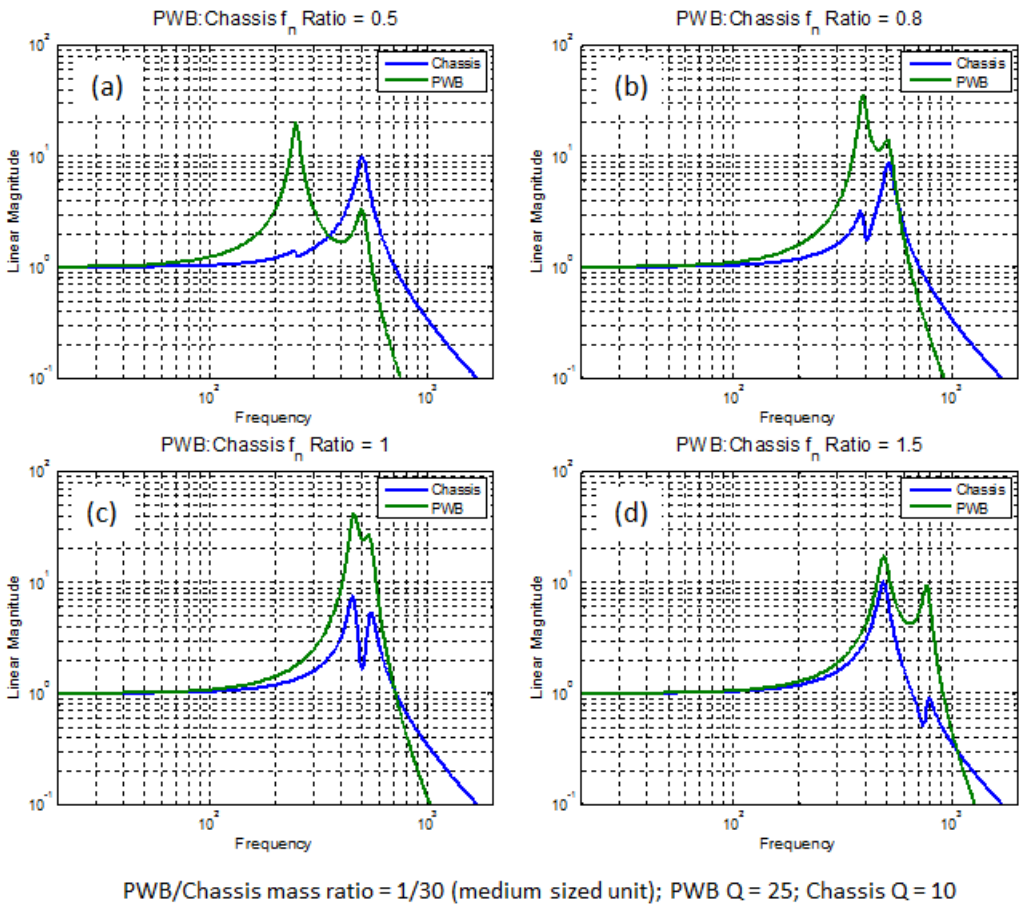

Figure 5: Simple Two DOF model illustration of the effect of the ratio of the base, or chassis mass m_1 to the load, or PWB mass m_2 on the same resonance frequency proximity cases used in Figure 4: a) $f_2/f_1 = 0.5$; b) $f_2/f_1 = 0.8$; c) $f_2/f_1 = 1.0$; d) $f_2/f_1 = 1.5$. Note the decreased relative influence of the PWB mass on the chassis mass response, and conversely, the increased influence of the chassis mass on the PWB mass response.

 Copyright 2014 California Institute of Technology. Government sponsorship acknowledged

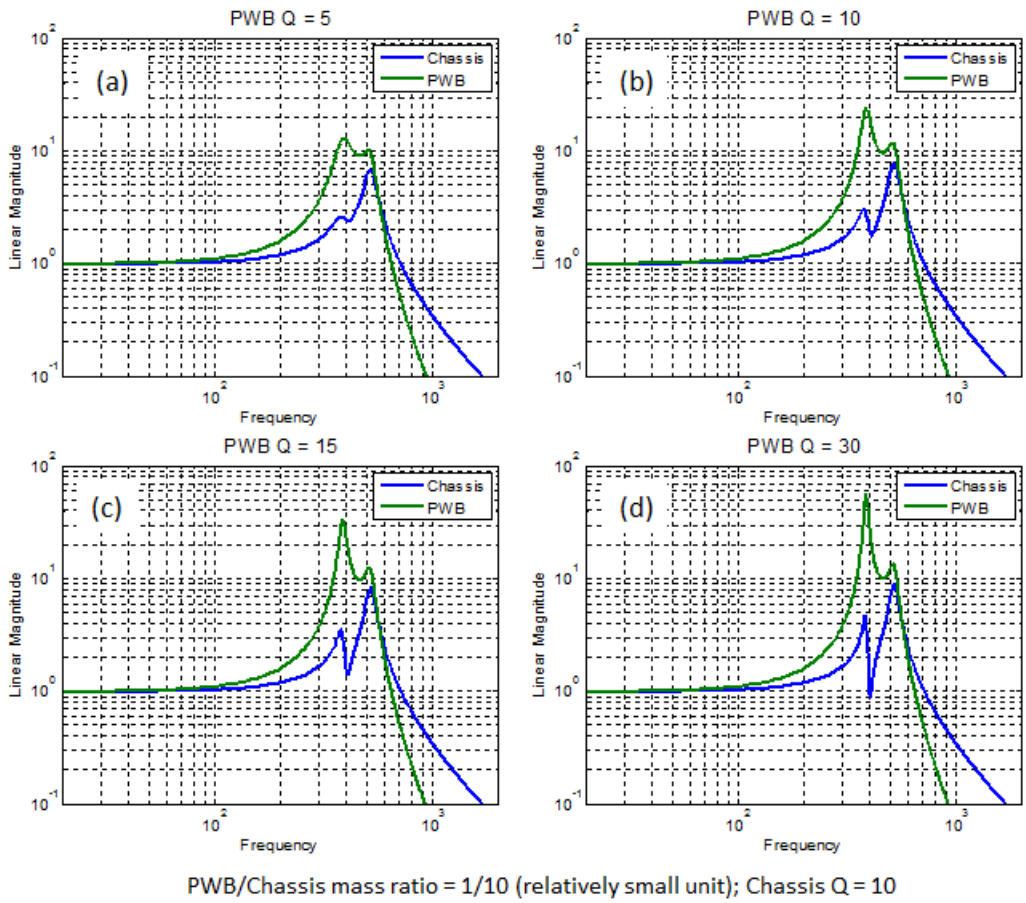

Figure 6: Simple Two DOF model illustration of the parametric effect of the *Q* of the PWB element and its relative influence on the chassis element response, as observed in the depth and slope gradient of the resulting notch: a) PWB Q = 5; b) PWB Q = 10; c) PWB Q = 15; d) PWB Q = 30;

DEMONSTRATION USING TEST DATA

Data were available from a random vibration test of an electronics unit in which the external chassis acceleration response as well as the internal response of one of the PWBs was recorded. This afforded an opportunity to validate the lumped parameter modeling approach against measured test data. Relevant physical parameters obtained from a finite element structural analysis documented in an internal technical memorandum are given in **Table 2**. The unit, shown in **Figure 7**, with a total weight of 28 lbs (12.7 kg), consisted of eight full span PWBs approximately 9" (22.9 cm) wide between the parallel side mounts and 7.5" (19.0 cm) high between the mother board and connectors. Other hardware, including the backplane, which was mounted near the unit base

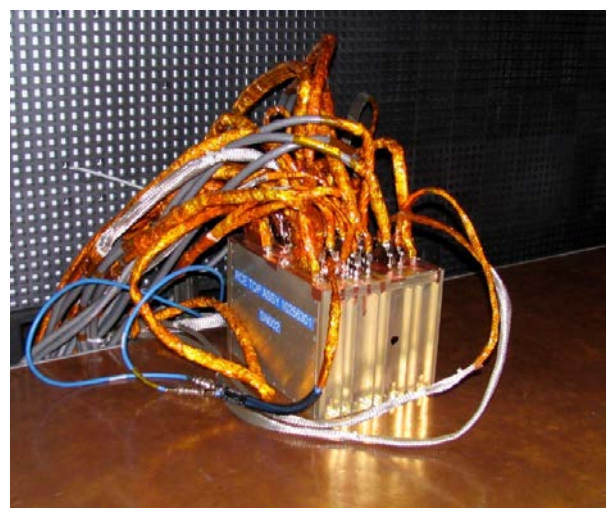

Figure 7: Electronics unit used in test case

 Copyright 2014 California Institute of Technology. Government sponsorship acknowledged

plane, and a center support structure supporting two partial width boards are not explicitly represented but lumped into the total mass of the chassis.

The chassis test response measurement is shown in **Figure 2**, overlaid with the input spectrum. Test measurements were normalized to the nominal input spectrum, as shown in **Equation 8** in order to eliminate the random variations in the actual test input. The data used in this example are from a -6 dB preliminary test run. The chassis response shows a prominent notch at 358 Hz, indicating the reaction to the force from one or more structures mounted to the chassis resonating at or near that frequency.

$$S_{aa}^{norm}(f) = \frac{S_{aa}^{meas}(f) S_{aa}^{\text{nominal}}(f)}{S_{input}^{meas}(f)} \tag{8}$$

$S_{aa}^{meas}(f)$ = PSD of a measured response accelerometer output

$S_{input}^{meas}(f)$ = PSD of the measured control accelerometer output

$S_{aa}^{\text{nominal}}(f)$ = Nominal specification profile logarithmically interpolated over (f)

Table 2: Physical properties of PWBs from electronics unit used in test case

PWB	Frame Weight lbs (kg)	CCA Weight lbs (kg)	PWB Weight lbs (kg)	FEM modal frequency (Hz)
A	1.10 (0.50)	1.70 (0.77)	2.80 (1.27)	218
B	0.94 (0.43)	1.39 (0.63)	2.33 (1.06)	228
C	0.50 (0.23)	1.00 (0.45)	1.50 (0.68)	223
D	0.50 (0.23)	1.00 (0.45)	1.50 (0.68)	213
E (copy of D)	0.50 (0.23)	1.00 (0.45)	1.50 (0.68)	213
F	0.50 (0.23)	1.00 (0.45)	1.50 (0.68)	213
G	0.50 (0.23)	0.90 (0.41)	1.40 (0.64)	228
H (spare)	0.59 (0.27)	0.78 (0.35)	1.36 (0.62)	NA

Examination of the configuration of the constituent PWBs in **Table 2** shows that five of them, C-G have a very similar structural makeup in terms of circuit card assembly (CCA) and frame weights, as well as FEM predicted modal frequency response. In addition, although PWBs A and B have more weight, their bending stiffness is also increased apparently by additional structural reinforcement such that the FEM modal frequency prediction is also very close to those predicted for PWBs C-G. As a first approximation, the resonance frequencies of model elements representing PWBs A-G are assigned as 358 Hz. Because of the lesser overall weight and CCA weight of PWB H, it would be reasonable to expect a 5-13% higher resonance frequency than PWBs A-G. However, there is no corresponding force reaction notch in the test measured chassis response in the expected frequency range. For this reason, a choice was made to also assign 358 Hz as the approximate resonance frequency of PWB H.

 Copyright 2014 California Institute of Technology. Government sponsorship acknowledged

After tuning the model mass participation factor α_n and Q_n parameters for PWBs A-H, and f_1, α_1 and Q_1 for the chassis in the 9 DOF model, a reasonable approximation of resulting base mass response to the test measured chassis response is shown in **Figure 8**. The predicted response of PWB D, the test-instrumented board, is also shown. Since the responses of the other PWBs A-C and E-H in this case exactly or very nearly overlay each other, only the curve for PWB D is shown in the plot for clarity. The model parameters used are shown in **Table 3**. Since all six of the model elements for PWBs C-H assigned the same parameter values, they could be combined into a single model element with the equivalent weight as the sum of the individual boards, resulting in an equivalent 4 DOF model.

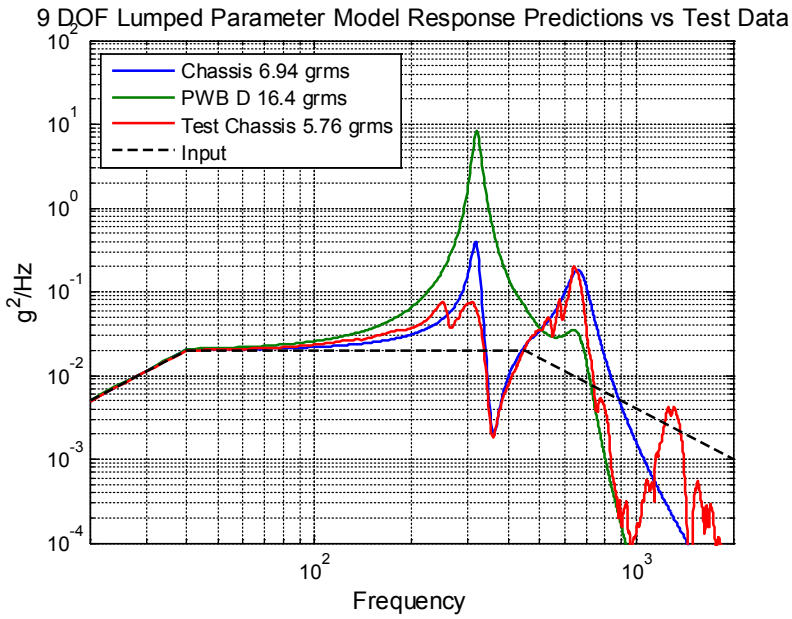

Figure 8: Results from an intial 9 DOF iteration of the lumped parameter model. The chassis response spectrum predicted by the model (blue) is copmared to the test-measured chassis response (red). The resulting PWB D response prediction is also shown. Spectra for the other modeled PWBs are not shown, since they overlay with that of PWB D. Since six of the PWBs are modeled with the same or nearly the same parameters, a 4 DOF model would yield similar results. (Test data have been normalized to the nominal input spectrum.)

Table 3: Lumped parameter model reprentaton of PWBs for electronics unit used in test case, along with model predictions of the RMS acceleration and relative RMS deflections for the modeled PWBs

Model Element	Weight lbs (kg)	Mass Partic. Factor α_n	Uncoupled Resonance f_n Hz	Q	Acceleration g's RMS	Rel. Deflection mils RMS (microns RMS)
Chassis	*	0.45	595	6.0	6.94	
PWB A	2.80 (1.27)	0.30	358	15.0	16.2	1.23 (31.2)
PWB B	2.33 (1.06)	0.30	358	15.0	16.2	1.23 (31.2)
PWB C	1.50 (0.68)	0.42	358	17.0	16.4	1.25 (31.8)
PWB D	1.50 (0.68)	0.42	358	17.0	16.4	1.25 (31.8)
PWB E	1.50 (0.68)	0.42	358	17.0	16.4	1.25 (31.8)
PWB F	1.50 (0.68)	0.42	358	17.0	16.4	1.25 (31.8)
PWB G	1.40 (0.64)	0.42	358	17.0	16.4	1.25 (31.8)
PWB H	1.36 (0.62)	0.42	358	17.0	16.4	1.25 (31.8)

 Copyright 2014 California Institute of Technology. Government sponsorship acknowledged

Another prominent notch at the lower frequency of 260 Hz remains un-represented by the previous iteration of the model. It is difficult to discern from existing information to which structural element this corresponds. Nevertheless, although the identity is undetermined, by representing this structural element as having a total weight of 2.5 lbs (1.13 kg), a mass participation factor of 0.4 and a Q of 14, the approximate physical parameters and dynamic response of the structural element can be deduced by modeling its relative influence on the chassis response, as shown in the revised model results in **Figure 9**. The parametric values and responses for each DOF in the updated model iteration are shown in **Table 4**.

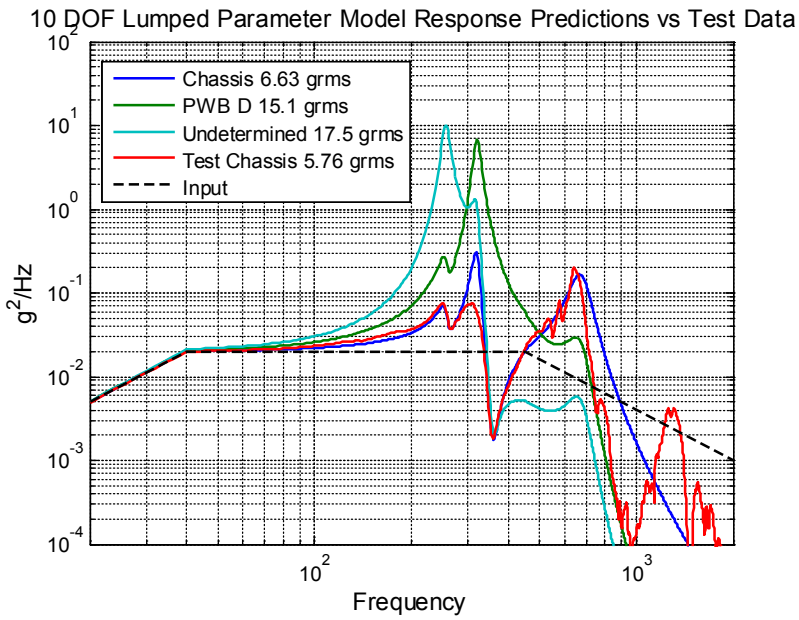

Figure 9: Results from 10 DOF iteration of the lumped parameter model that includes the effect of an undetermined internal structure(s) producing a notch at 260 Hz. The modeled chassis response spectrum (blue) can be compared to the test-measured chassis response (red). Also shown is the predicted response of PWB D and the undetermined structure. (Test data have been normalized to the nominal input spectrum.)

Table 4: Lumped parameter model reprentaton of PWBs for electronics unit used in test case, along with model predictions of the RMS acceleration and relative RMS deflections for the modeled PWBs. Includes undetermined model element with uncoupled resonance frequecy at 260 Hz.

Model Element	Weight lbs (kg)	Mass Partic. Factor *α_n*	Uncoupled Resonance *f_n* Hz	Q	Acceleration g's RMS	Rel. Deflection mils RMS (microns RMS)
Chassis	*	0.45	595	6.0	6.63	
PWB A	2.80 (1.27)	0.30	358	15.0	14.9	1.13 (28.7)
PWB B	2.33 (1.06)	0.30	358	15.0	14.9	1.14 (29.0)
PWB C	1.50 (0.68)	0.42	358	17.0	15.1	1.15 (29.2)
PWB D	1.50 (0.68)	0.42	358	17.0	15.1	1.15 (29.2)
PWB E	1.50 (0.68)	0.42	358	17.0	15.1	1.15 (29.2)
PWB F	1.50 (0.68)	0.42	358	17.0	15.1	1.15 (29.2)
PWB G	1.40 (0.64)	0.42	358	17.0	15.1	1.15 (29.2)
PWB H	1.36 (0.62)	0.42	358	17.0	15.1	1.15 (29.2)
Undetermined	2.50 (1.13)	0.40	260	14.0	17.5	2.52 (64.0)

 Copyright 2014 California Institute of Technology. Government sponsorship acknowledged

This does illustrate one of the previously mentioned limitations of using the lumped parameter approach to deduce the response of specific internal structural elements from the externally measured chassis response. Although a model can be constructed to approximate the dynamics of the internal components, there remains a certain degree of uncertainty after making a best guess as to which specific PWBs correspond to which force reaction notch in the chassis response. One possibility might be that one or two of the boards from the previously grouped PWB A-H may have a lower resonance frequency due to differing boundary conditions or CCA mass distribution. Another possibility is that this may be associated with the cable support assembly mounted to the top of the chassis.

Figure 9 shows a notable spectral feature difference between the test chassis response data and the model prediction near 320 Hz. The peak predicted by the model at that frequency appears in the test response data to be "rounded" and much less prominent. It is apparently a dynamic feature of the test article outside the limitations of the model assumptions given earlier, as the feature's characteristics are not reproducible by any parametric variations of the model or additional degrees of freedom.

Although there are other features in the chassis test measurement above 700 Hz that might be interpreted as influence of resonating structural elements attached to the chassis, no attempt is made to model these. From the information available, it is uncertain which structural elements might have resonances in this range, or since this is nearly twice the 358 Hz resonance of the group of modeled PWBs, these may be associated with secondary board modes.

A comparison of the model predicted PWB D response with the corresponding test measured response from an accelerometer mounted near the center of the test board can be seen in **Figure 10**. The predicted overall RMS acceleration response of PWB D is 15.1 grms, while the test measured RMS response is 13.2 grms. However, using a more commensurate comparison which includes only the contribution of the major modal response up to 600 Hz is 11.7 grms, the model over-predicts by 30%, or 2.2 dB. It can be noted that the "rounded" peak feature near 320 Hz is also reflected in the test measured board response, which contributes to the error. Nevertheless, considering the characteristic variability of random data, this is a reasonably close estimation.

CONCLUSIONS AND FUTURE WORK

Both theory and test observations show the characteristic influence of PWB resonance responses on the spectral signature of the chassis acceleration response. The reasonably good correlation between model predictions and measured test data demonstrated herein shows the viability of using a lumped parameter model to deduce the random vibration response of PWBs in an enclosed electronics unit based on the spectral signature of the externally measured chassis acceleration response. With due attention to the noted assumptions and limitations incumbent in applying this approach, it provides an empirical alternative to the often used crude estimation practices, significantly reducing the potential for over- and under-prediction.

 Copyright 2014 California Institute of Technology. Government sponsorship acknowledged

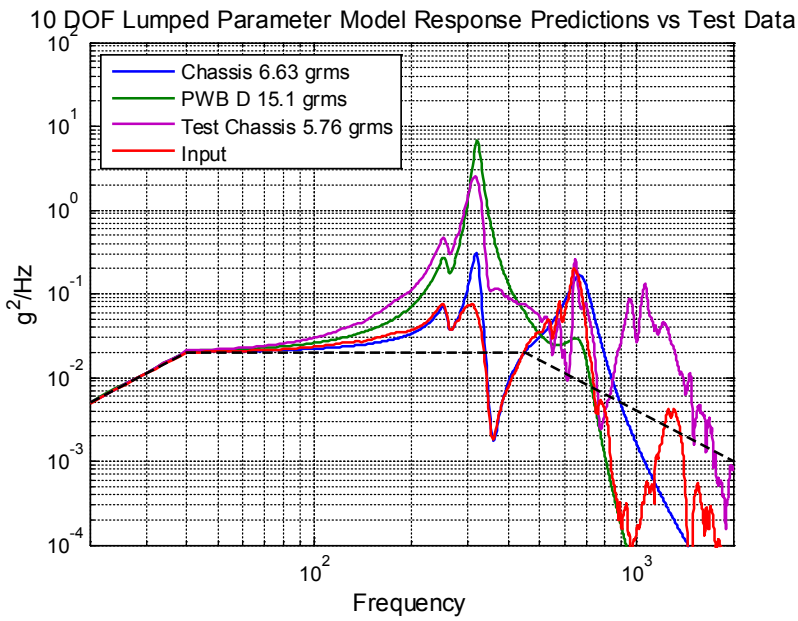

Figure 10: Comparison of 10 DOF lumped parameter model predictions with test-measured data. Chassis response: model prediction (blue) vs. test-measured (red); PWB D response: model prediction (green) vs. test-measured (magenta). (Test data have been normalized to the nominal input spectrum.)

However, there is more development that can be done to bring this methodology to a greater technical maturity in order to reduce the levels of uncertainty associated with its application. Future work includes further validation of lumped parameter modeling with data from well-instrumented random vibration tests, including the use of interface reaction force measurements from force-limited tests. Additionally, correlation of lumped parameters models with detailed finite element models, preferably for which corresponding test data are available, will help to refine the theoretical basis for the approach. This will lead to a more complete representation of the primary modal characteristics of the hardware, including mass participation, and enable a better distinction between primary and secondary modal effects.

After further development, it is envisioned that a lumped parameter modeling approach can be adapted to a broader range of application for indirect observation of dynamic responses where direct instrumentation is prohibitive, such as for optical components.

ACKNOWLEDGEMENTS

The research was carried out at the Jet Propulsion Laboratory, California Institute of Technology, under a contract with the National Aeronautics and Space Administration.

The author would like to acknowledge David C. Sandkulla, of The Aerospace Corporation for early collaboration in developing this methodology. Juan P. Fernandez of Jet Propulsion Laboratory directed the electronics unit random vibration test from which the data were obtained

 Copyright 2014 California Institute of Technology. Government sponsorship acknowledged

for the test case used in this paper. The structural analysis of the electronics unit test article referenced in this paper was performed by Steven Carlson for Jet Propulsion Laboratory.

REFERENCES

Bamford, R. M., B. K. Wada, W. H. Gayman, "Equivalent Spring-Mass System For Normal Modes," Jet Propulsion Laboratory (California Institute of Technology) Technical Memorandum 33-3803 (1971)

Scharton, T. D., "Vibration_Test Force Limits Derived From Frequency Shift Method," AIAA Journal of Spacecraft and Rockets 32(2) (1995), pp. 312-316

Scharton, T. D., "Force Limited Vibration Testing Monograph," NASA Reference Publication RP-1403 (May, 1997)

BIOGRAPHY

Dr. Michael Van Dyke joined the Dynamics Environments & Aerospace Nuclear Safety Engineering Group at Jet Propulsion Laboratory in January of 2013, where he specializes in aerospace acoustic, random vibration and shock environment testing and analysis. Previous to this he served for twelve years at The Aerospace Corporation in El Segundo California as a technical consult for space programs. He received his Ph.D. in Acoustics from The Pennsylvania State University, and a B.S. in Electrical Engineering from California State University in Long Beach. He serves on the Planning Board for the Aerospace Testing Seminar (ATS), and is a member of The Acoustical Society of America and AIAA. He is a previous recipient of the Otto Hamberg Best Paper Award.

 Copyright 2014 California Institute of Technology. Government sponsorship acknowledged

APPENDIX A: Derivation of a General *N*-DOF "Asparagus Patch" Model

A discrete DOF mass-spring-dashpot diagram for a base representing a chassis and *N*-1 parallel mounted PWBs and driven by prescribed acceleration $\ddot{x}_0 \exp(j\omega t)$ is shown in **Figure N**. This corresponds to the following force balance ordinary differential equation (ODE) system of equations for *N* DOF, with the exponential suppressed for convenience.

$$\begin{aligned}
m_1\ddot{x}_1 + R_1(\dot{x}_1 - \dot{x}_0) + K_1(x_1 - x_0) - R_2(\dot{x}_2 - \dot{x}_1) + K_2(x_2 - x_1) & \\
- R_3(\dot{x}_3 - \dot{x}_1) + K_3(x_3 - x_1) & \\
\vdots & \\
- R_N(\dot{x}_N - \dot{x}_1) + K_N(x_N - x_1) &= 0 \\
m_2\ddot{x}_2 + R_2(\dot{x}_2 - \dot{x}_1) + K_2(x_2 - x_1) &= 0 \\
m_3\ddot{x}_3 + R_3(\dot{x}_3 - \dot{x}_1) + K_3(x_3 - x_1) &= 0 \\
\vdots & \\
m_N\ddot{x}_N + R_N(\dot{x}_N - \dot{x}_1) + K_N(x_N - x_1) &= 0
\end{aligned} \tag{A.1}$$

where m_n, R_n and K_n are the mechanical mass, resistance and stiffness, respectively, associated with the *nth* DOF. The mechanical resistance is related to the critical damping ratio ζ_n by $R_n = 2\omega_0 m_n \zeta_n$.

The equations are mass normalized, and the system of equations is transformed into a linear system of acceleration variables by integrating the velocity terms by dividing by $1/j\omega$, and the displacement terms by dividing by $-\omega^2$:

$$\begin{aligned}
\ddot{x}_1 - \left(j\frac{R_1}{\omega m_1} + \frac{K_1}{\omega^2 m_1}\right)(\ddot{x}_1 - \ddot{x}_0) + \left(j\frac{R_2}{\omega m_1} + \frac{K_2}{\omega^2 m_1}\right)(\ddot{x}_2 - \ddot{x}_1) & \\
+ \left(j\frac{R_3}{\omega m_1} + \frac{K_3}{\omega^2 m_1}\right)(\ddot{x}_3 - \ddot{x}_1) & \\
\vdots & \\
+ \left(j\frac{R_N}{\omega m_1} + \frac{K_N}{\omega^2 m_1}\right)(\ddot{x}_N - \ddot{x}_1) &= 0 \\
\ddot{x}_2 - \left(j\frac{R_2}{\omega m_2} + \frac{K_2}{\omega^2 m_2}\right)(\ddot{x}_2 - \ddot{x}_0) &= 0 \\
\ddot{x}_3 - \left(j\frac{R_3}{\omega m_3} + \frac{K_3}{\omega^2 m_3}\right)(\ddot{x}_3 - \ddot{x}_0) &= 0 \\
\vdots & \\
\ddot{x}_N - \left(j\frac{R_N}{\omega m_N} + \frac{K_N}{\omega^2 m_N}\right)(\ddot{x}_N - \ddot{x}_0) &= 0
\end{aligned} \tag{A.2}$$

 Copyright 2014 California Institute of Technology. Government sponsorship acknowledged

Noting the following relationships,

$$\frac{K_n}{m_n} = \omega_n^2, \qquad \frac{K_n}{m_1} = \omega_n^2 \frac{m_n}{m_1}, \qquad \frac{R_n}{m_n} = \frac{\omega_n}{Q_n}, \qquad \frac{R_n}{m_1} = \frac{\omega_n}{Q_n}\frac{m_n}{m_1}, \tag{A.3}$$

the system of equations can be expressed in terms of mass, resonance frequency ω_n and quality factor Q_n for each *nth* DOF.

$$\begin{aligned}
\ddot{x}_1 - \left(j\frac{\omega_1}{\omega Q_1} + \left(\frac{\omega_1}{\omega}\right)^2 \right)(\ddot{x}_1 - \ddot{x}_0) + \frac{m_2}{m_1}\left(j\frac{\omega_2}{\omega Q_2} + \left(\frac{\omega_2}{\omega}\right)^2 \right)(\ddot{x}_2 - \ddot{x}_1) \\
+ \frac{m_3}{m_1}\left(j\frac{\omega_3}{\omega Q_3} + \left(\frac{\omega_3}{\omega}\right)^2 \right)(\ddot{x}_3 - \ddot{x}_1) \\
\vdots \\
+ \frac{m_N}{m_1}\left(j\frac{\omega_N}{\omega Q_N} + \left(\frac{\omega_N}{\omega}\right)^2 \right)(\ddot{x}_N - \ddot{x}_1) = 0 \\
\ddot{x}_2 - \left(j\frac{\omega_2}{\omega Q_2} + \left(\frac{\omega_2}{\omega}\right)^2 \right)(\ddot{x}_2 - \ddot{x}_0) = 0 \\
\ddot{x}_3 - \left(j\frac{\omega_3}{\omega Q_3} + \left(\frac{\omega_3}{\omega}\right)^2 \right)(\ddot{x}_3 - \ddot{x}_0) = 0 \\
\vdots \\
\ddot{x}_N - \left(j\frac{\omega_N}{\omega Q_N} + \left(\frac{\omega_N}{\omega}\right)^2 \right)(\ddot{x}_N - \ddot{x}_0) = 0
\end{aligned} \tag{A.4}$$

In this form, it is intuitive to note that the terms of the equation reduce to dimensionless quantities Q_n, the ratios of the natural frequencies ω_n to the excitation frequency, and the ratios of the masses m_n to the base mass m_1.

Normalizing the equations by the prescribed input acceleration, such that $z_n = \ddot{x}_n / \ddot{x}_0$, collecting the terms and using the shorthand

$$a_n(\omega) = j\frac{\omega_N}{\omega Q_N} + \left(\frac{\omega_N}{\omega}\right)^2 \tag{A.5}$$

and

$$\gamma_n = \frac{m_n}{m_1}, \tag{A.6}$$

 Copyright 2014 California Institute of Technology. Government sponsorship acknowledged

the frequency response functions z_n are the solutions of the following matrix:

$$\begin{vmatrix} 1-a_1(\omega)-\sum_{n=2}^{N}\gamma_n a_n(\omega) & \gamma_2 a_2(\omega) & \gamma_3 a_3(\omega) & \cdots & \gamma_N a_N(\omega) \\ a_2(\omega) & 1-a_2(\omega) & 0 & \cdots & 0 \\ a_3(\omega) & 0 & 1-a_3(\omega) & \cdots & 0 \\ \vdots & \vdots & \vdots & \ddots & \vdots \\ a_N(\omega) & 0 & 0 & \cdots & 1-a_N(\omega) \end{vmatrix} \begin{vmatrix} z_1 \\ z_2 \\ z_3 \\ \vdots \\ z_N \end{vmatrix} = \begin{vmatrix} -a_1(\omega) \\ 0 \\ 0 \\ \vdots \\ 0 \end{vmatrix} \tag{A.5}$$

 Copyright 2014 California Institute of Technology. Government sponsorship acknowledged