Wireless Monitoring of the Height of Condensed Water in Steam Pipes

Hyeong Jae Lee, Yoseph Bar-Cohen, Shyh-Shiuh Lih, Mircea Badescu, Arsham Dingizian, Nobuyuki Takano, and Julian O. Blosiu,

Jet Propulsion Laboratory/California Institute of Technology, MS 67-119, 4800 Oak Grove Drive, Pasadena, CA 91109-8099, 818-354-0784, lih@jpl.nasa.gov, Web: http://ndeaa.jpl.nasa.gov

1. Abstract

A wireless health monitoring system has been developed for determining the height of water condensation in the steam pipes and the data acquisition is done remotely using a wireless network system. The developed system is designed to operate in the harsh environment encountered at manholes and the pipe high temperature of over 200 ˚C. The test method is an ultrasonic pulse-echo and the hardware includes a pulser, receiver and wireless modem for communication. Data acquisition and signal processing software were developed to determine the water height using adaptive signal processing and data communication that can be controlled while the hardware is installed in a manhole. A statistical decision-making tool is being developed based on the field test data to determine the height of in the condensed water under high noise conditions and other environmental factors.

Keywords: High Temperatures, piezoelectric transducers, Fluid height monitoring, health monitoring, steam condensation, Sensors

2. Introduction

Health monitoring systems are used for many *in-situ* applications and this reported study covers the research and development that was conducted in support of steam pipes. Such pipes are used in various major cities in the world and the focus of this paper in on the work related to the system that is operated in Manhattan, New York City. This system is managed as a district heating system carrying steam from central power stations under the streets to support heating, cooling, or supply power to high rise buildings and businesses. Health monitoring of steam pipes is critical to assure their safe operation. Excessive rise in the level of condensed water inside a steam pipe is a source of concern due to the possible excitation of water hammer effects that may lead to serious consequences including damaged vents, traps, regulators and piping. The water hammer effect is caused by accumulation of condensed water that is trapped in horizontal portions of the pipes. In order to prevent this from occurring, an effective health monitoring system is required [Bar-Cohen et al. 2010, 2011].

Ultrasonic techniques for nondestructive testing (NDT) or non-destructive evaluation (NDE) have been widely used in industry, mechanical engineering, civil engineering, and aeronautical engineering, where the pulse transit time method is used to monitor the material properties and integrity of critical structures [Schmerr et al., 2007]. However, the operation of ultrasonic method in high temperature (>200˚C) is a challenging task because of the instability of the material properties at elevated temperature. For the measurement of condensates in steam pipe, the ultrasonic sensor system needs to operate in the harsh environment encountered at manholes, where the steam pipe wall temperature exceeds 200˚C, ambient air temperatures are between 50˚C and 150˚C, and the atmosphere has a very high level of humidity. The proper choice of sensing materials is a critical part to operate ultrasonic sensor system under high temperature environment. In particular, the selection of high temperature piezoelectric material is of important because the ultrasonic probe is the electronic component residing in the most extreme conditions of real steam pipes (~202 ˚C and humidity 100%).

Ultrasonic transducers are limited in their upper temperature operation range by the Curie temperature of the piezoelectric material, as piezoelectric materials are permanently depolarized at their Curie temperatures, and cannot be used for transducer applications [Jaffe et al., 1971, Berlincourt,

1971]. In practice, the operating temperature must be substantially lower than the Curie point in order to minimize thermal aging and property degradation. The piezoelectric materials that possess high Curie points >500˚C are available, such as tungsten bronze, bismuth layer (BLSF) or double perovskite layer (PLS) structures, $LiNbO_3$ and Quartz [Damjanovic, 1998, Kaˇzys et al., 2008]. However, the issues associated with these materials are the transducer properties are considerably lower than conventional piezoelectric material, such as lead zirconate titanate (PZT). The health monitoring system working at high temperature >200˚C requires high performance ultrasonic transducers as the steam pipes involve several issues, such as the effect of the pipe curvature that caused wave losses and increased attenuation at high temperatures. These effects greatly reduce the signal-to-noise ratio, preventing the ultrasound wave from propagating through material mediums in steam pipe systems. For this prototype, a modified Navy type II (known as PZT5A) was selected as an active piezoelectric material due to its effective combination of high piezoelectric properties and high Curie temperature (~350 ˚C), allowing to produce ultrasonic probe with broad bandwidth and higher sensitivity for operation at high temperatures. Preliminary studies showed that among various transducers with different diameters and transmission frequencies, 2.25 MHz, modified type II transducers yielded satisfactory probe bandwidth and sensitivity with high thermal stability up to 250 ˚C [Lee et al., 2013].

Another critical consideration for health monitoring for steam pipe is the implementation of advanced signal processing method. The technique of ultrasonic measurements is based on the measurement of Time-of-flight (TOF) between two successive echoes, which result from the reflections of the wave at the interface of steam and water. The level of condensates can be obtained according to the following equation: $d(T)=1/2*TOF*c(T)$, where $c(T)$ is the propagation speed of the ultrasonic waves in the medium that is temperature (T) dependent. In a practical circumstance, however, this method is not straightforward as the received signals are generally unstable due to the disturbance of the water surface, the external noise, temperature variation, or turbulence of the water flow, requiring an effective signal processing algorithm. In previous work, a signal processing that is based on the Hilbert transform demonstrated a good capability for monitoring the height as well as the characterization of its disturbances under various conditions, such as high temperature and/or a low level of oil height conditions.

The goal of this work was to develop breadboard drive electronics consisting of high temperature (HT) probe (250˚C), a strapping fixture that allows blind-alignment of the probe, computer code that performs smart data acquisition and analysis, and the drive hardware that can be subjected to 70˚C and 85% humidity for placement at a manhole away from the pipe itself. The hardware was equipped with modem for wireless communication of the data. The prototype system design, ultrasonic method, signal processing method, and preliminary field test results are presented in this paper.

3. Health Monitoring System

Ultrasonic method

There are three different techniques that are generally used for non-destructive testing; pulse-echo, pitch-catch, and through-transmission. For the case of pulse-echo and pitch-catch, both of these approaches involve emitting ultrasonic wave pulses from a piezoelectric transducer and detecting the echoes that are reflected from the surface of the reflector. The reflected wave amplitude and energy depend on the acoustic impedance (density x acoustic velocity) of the two materials that are involved with any interface. Given knowledge of the wave velocity through the pipe wall, and in the condensed hot steam, the height of condensates can be determined. One key difference between these methods is pulse-echo method uses the same transducer as transmitter and receiver, whereas two separate transducers are used in the case of pitch-catch method.

For the implementation of pitch-catch method, the difficulties arise as the level of condensates varies with time and the transmission coefficient highly depends on the angle of incidence to the surface of the layer. For example, for the fluid-solid interface, the critical angle for steel to a water or vice versa is approximately 30 degree, while that for steam to water is around 10 degree, above which there are no waves transmitted into the solid [Schmerr et al., 2007]. Therefore, it seems very difficult to determine the level of condensates with pitch-catch method. For the case of through-transmission method, where an ultrasonic transmitter is used on one side of the material while a detector is placed on the opposite side, most of the acoustic energy is reflected at the interfaces (steel/water and/or

water/steam) along the path of transmission because there is a significant acoustic impedance mismatch between interfaces. For example, the normal incidence transmission coefficient of ultrasound energy at a steel-water interface and at a water-steam at 200 ˚C are ~9.7% and ~1.37 %, respectively, while that at a steel-steam is only 0.04% (see Table 1), making it difficult to receive the ultrasonic signals from the opposite side of the ultrasonic probe. In contrast, pulse-echo method provides a more flexible and ability to measure the height since there is no reliance on receiving the reflection at a specific angle, as well as less transmission losses compared to through-transmission method. Therefore, in this work, the pulse-echo method was used for the measurement of the level of condensates.

Table 1: Transmission loss of ultrasound energy for normal incident at various Interfaces at 200 ˚C.

Interface	Transmission coefficient (%)	Transmission loss (dB)
Transducer / Steel	98.5	-0.1
Steel / Water	9.7	-10.1
Water / Steam	1.37	-18.6
Steel / Steam	0.04	-34.5

A schematic description of ultrasonic pulse-echo system is shown in Figure 1. Note that, however, when used pulse-echo method, several issues need to be taken into account, such as reflections caused by the potential sediments in the bottom of the pipe inner surface along the path of the wave, as well as the wave losses due to the presence of cavitations and bubbles caused by high speed steam flow (~40 m/s). In addition, for the measurements of a low level of condensed water height, there is an issue of interference of the multiple reflections within the pipe bottom wall, requiring high level of axial resolution of ultrasonic probe. Because of these effects, the effective signal processing technique is required to identify the height of the condensates.

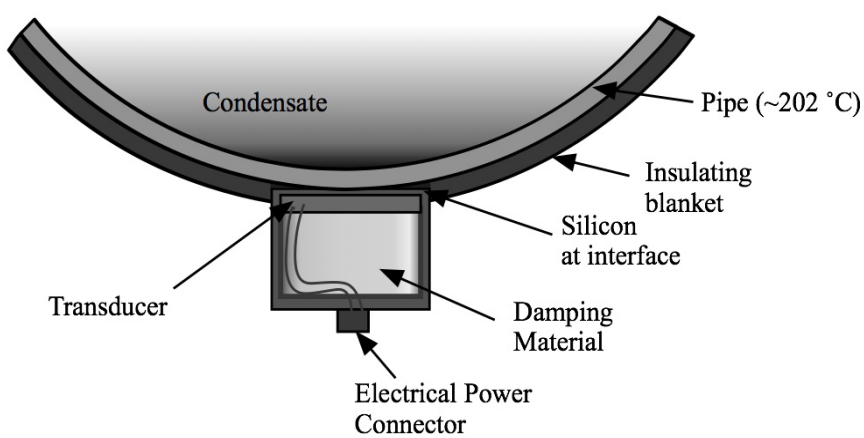

Figure 1: A schematic diagram illustrating the pulse-echo method exhibiting ultrasonic probe mounted onto the steam pipe.

Supporting Units

When the hardware is installed in the manhole, one of the concerns that needed attention is the need to be able to align the probe without the presence of water surface inside the pipe. For this purpose, designs were created to accommodate for the blind alignment capabilities on the existing fixture. We have considered three design options that would allow for circumferential alignment as shown in Figure 2**.** After assessing the capability of these three designs, the configuration that is on the right of this figure (c) was chosen. In preparations for the field test, a mounting strap was also developed for aligning and securing the probe intimate contract to the pipe surface. The schematic design of the mounting strap, fixture and ultrasonic probe are shown in Figure 3.

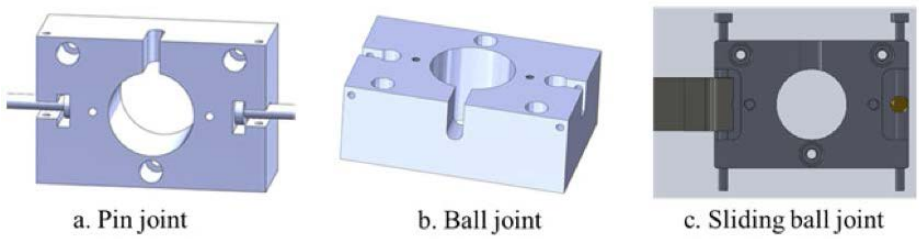

Figure 2: Schematic view of the mounting strap options for the **"**blind**"** alignment and strapping the probe to the pipe surface in the field.

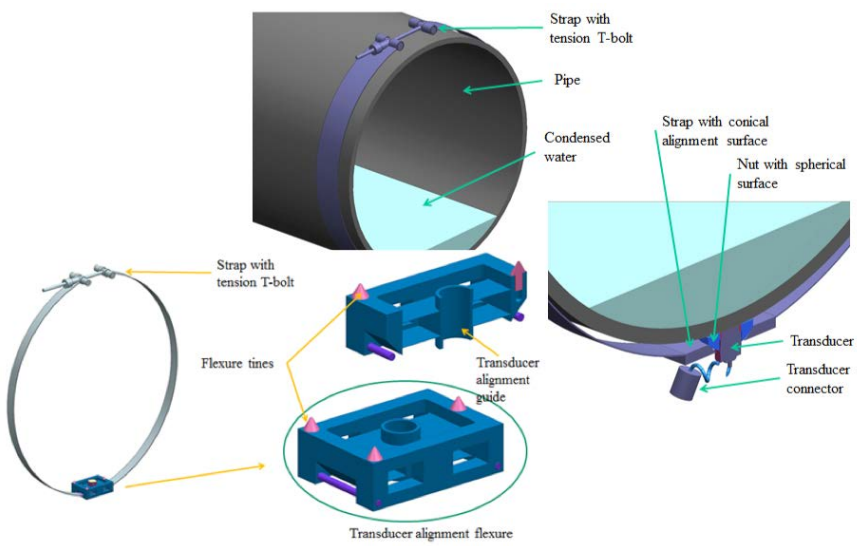

Figure 3: Schematic view of the ultrasonic transducer and the mounting strap for the alignment and strapping the probe to the pipe surface in the field.

The probe supporting electronic unit consists of high voltage pulser, preamplifier, data acquisition and analysis software, internet communication modem, and a microprocessor for controlling the signals and their analysis (Figure 4). The drive hardware can survive and operate in the range of -20 ˚C to +70 ˚C, and the box is capable of sustaining 70 ˚C and 85% humidity. This electronic box will reside near the manhole cover away from the hot pipe. The main functions of this electronic box are to drive the ultrasonic probe with a high voltage pulse and to sense the low level signal echo signal produced by the transducer. The main controller electronics converts the signal that receives from the ultrasonic probe to water level readings within the pipe. Those water level readings will be broadcast regularly through the cellular phone network, to a central receiving station. Electrical connections between the box and ultrasonic probe is provided using environmentally resistant, high temperature cables, which is proven to function in high temperature (250˚C) and high humidity environments.

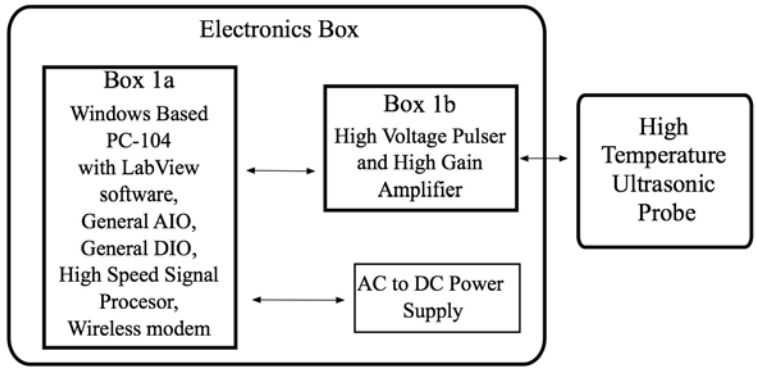

Figure 4: Electronics system hardware block diagram: The system consists of the main electronics housing containing a 1.8GHz PC-104 format computer, and box-1b that holds the High Voltage Impulse drive and the low voltage amplifier circuits for the transducer probe.

4. Signal Processing Algorism

To enhance the analysis of the data and obtain as much as possible reliable height values, a data processing algorism based on the signal envelop and automatic echo wave-front determination was developed, where the waveform data passed a low pass filter first and the envelopes of the signals were calculated by using Hilbert transformation [Oruklu et al., 2009, Lih et al., 2013]. It is important to note that since the ultrasonic wave travels through the pipe wall, high frequency reflection signals are generated in the signal envelope. These reflection signals usually generate many local peaks and valleys and make the determination of water height difficult. An example of this case is shown in Figure 5. Therefore, these signals need to be removed and an effective approach was found through the use of low pass filtering process. Since the ringing of signal envelope is caused by the reflections within the pipe wall, the reflection frequency, $f_{ref} = 1/ T_{ref}$, can be used for the cut-off frequency in the low pass filter, where the reflection period T_{ref} of reflected can be obtained from the round trip time that the ultrasonic wave propagates between the pipe walls. Figure 5 also shows the filtered results of the Hilbert envelope. As shown, when the pipe thickness is determined, a filtered Hilbert envelope can be used to monitor the water height.

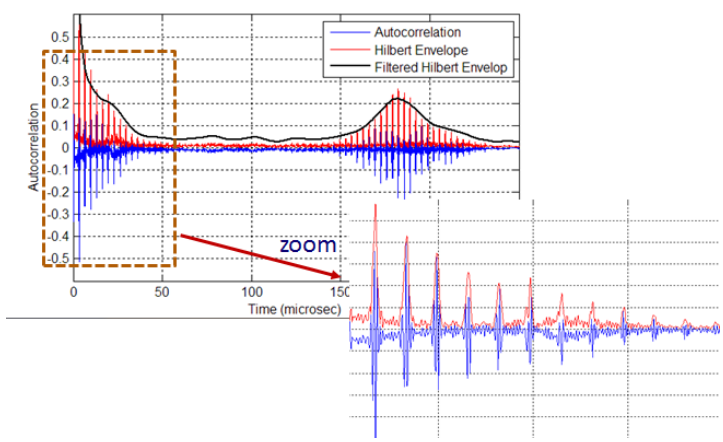

Figure 5: Application of autocorrelation, Hilbert envelop, and filtered Hilbert envelop using the reflection signal from the pipe wall.

The signal processing and control software was written in Labview code, and it was made for control through the internet using a browser. One critical point for the implementation of signal processing algorithm is to use the accurate speed of sound of condensates, as the speed of sound of

compressed liquid water depends on the temperatures and pressures, and the steam pipe is associated with high pressure (>10 MPa) and high temperature (>200˚C), requiring velocity recalibration. Figure 6 demonstrates the phase diagram for water/steam and the illustration of the steam pipe system. The approximate temperature and pressure in steam pipe are indicated by the dashed line. Note that the condensation takes place on the bottom of steam pipe when the pipe wall temperature is below the saturation temperature of the steam for a given pressure. Therefore, the temperature of condensed water is expected to be smaller than the saturation temperature of the steam.

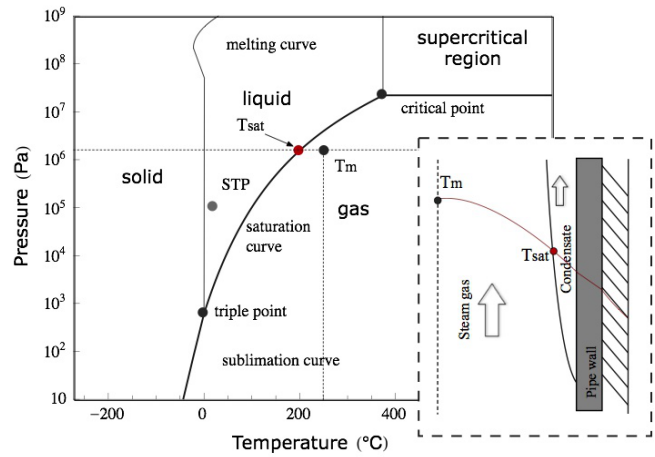

Figure 6: Phase diagram of water/steam, and illustration of temperature profile in steam pipe.

The acoustic properties of steel, water and steam are listed in Table 2 at different temperature and pressure. Reviewing the documented information in the literature [Lin et al., 2012], the speed of sounds of pure water at temperatures between 100 ˚C and 200 ˚C decreases with increasing temperature, from 1540 m/s to 1330 m/s. Considering the uncertainties in the conditions of temperature and pressure of condensed water, the average value of the speed of sound of water between 150 ˚C and 200 ˚C was used, as the effect is suggested to be within the bounds of a reasonable experimental error, on the order of 5-6% in the temperature range from 150 to 200 ˚C.

Table 2: Acoustic properties of steel, water and steam depending on the temperature and pressure. * indicates the saturation temperature. [Lin et al., 2012, Nowacki et al., 2009]

	T (˚C)	P (MPa)	ρ (kg/m)	c (m/s)	Z (MRayl)
Steel	20	0.1	7890	5955	46.98
	200	0.1	7800	5787	45.14
Water	20	0.1	1000	1482	1.48
	140	1.06	926	1487.4	1.3773
	200	1.95	864	1332	1.1508
Steam	140*	0.36	1.96	490.9	0.001
	200*	1.5	7.85	506	0.004

5. Preliminary Field Test

In May 2013, the completed prototype of the monitoring system was installed in a manhole in NY. The developed system consists of a high temperature probe that sustains 250 ˚C and drive electronics that sustain 70 ˚C and 85% humidity with wireless communication capability. The drive electronics is effectively constructed as a “Black-Box” having a plug for power and a BNC connector for the cable to the probe. The probe is strapped onto the pipe with alignment fixture, where the probe is glued to

the pipe while the strap is mounted over a single fiberglass blanket that covers the manhole. The main focus for this work was feasibility assessment of real time electronics in support of an instrument to measure the height of condensed water inside steam pipes in an underground high temperature environment. In the field, these measurements are continuously recorded and routinely transmitted to a central location via a wireless modem. A graphic illustration of the hardware is shown in Figure 7, and a view of the developed virtual instrument display is shown in Figure 8, exhibiting the received signals and the processed data.

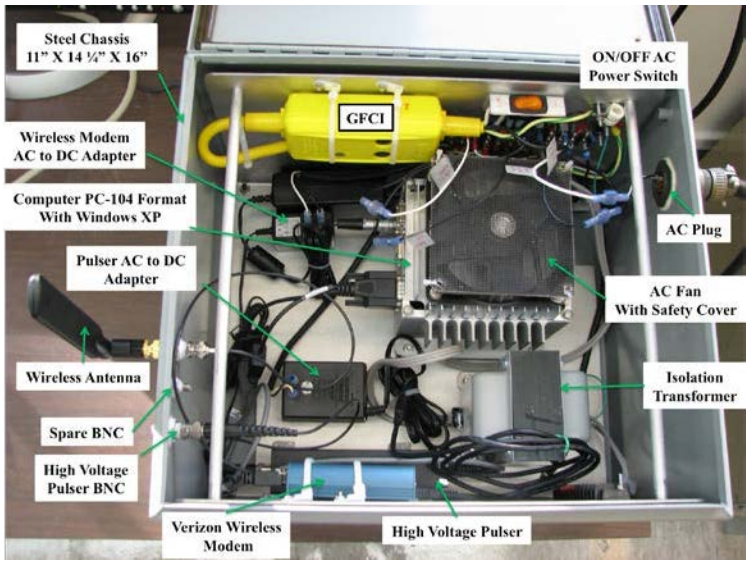

Figure 7: Photo of the developed support electronics breadboard.

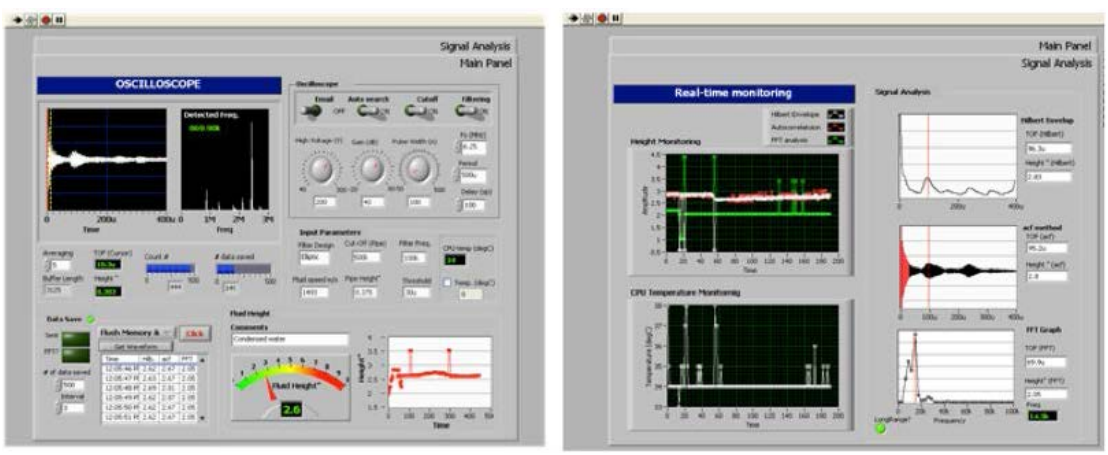

Figure 8: The Labview display of the drive electronics as viewed using a browser.

Prior to the installation of health monitoring system on the high temperature steam pipe, the effect of cable length was investigated as a long cable might lower the resolution of the ultrasonic probe reducing the accuracy of measuring the water height. The reason is due to the extension of the excitation pulse length. For example, due to the complex electrical impedance profile of most ultrasonic probes, there is an electrical impedance mismatch between the cable and the probe and/or a pulser, which causes multiple reflections within the pulser and probe. When the reflected pulse from the probe reaches the transducer again, it acts as a second excitation pulse that follows the original pulse. For the case of a short cable, the reflected pulse arrives very quickly after the initial excitation

pulse; thus, the cable does not have significant effect on the height measurements. However, when the round trip time of reflected electrical energy becomes longer, the multiple excitation pulses add to the original pulse signal by a round trip time interval, consequently increasing the excitation pulse length, and limiting the axial resolution. Moreover, there is a possibility that a long cable might change the electro-mechanical properties of the ultrasonic probe including the frequency, bandwidth, and amplitude of pulse-echo response.

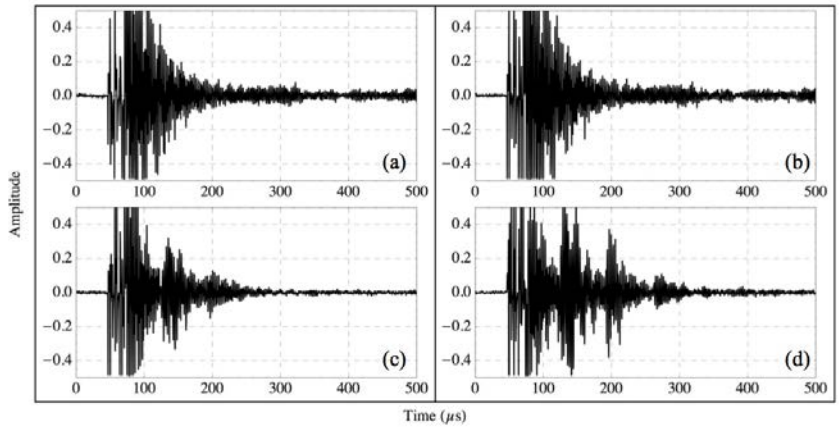

Figure 9: Received signals with and without 50 feet extension cable under no water and with water condition. (a) Waveforms from steel pipe with 50 feet extension cable, (b) steel pipe without extension cable, (c) 50 mm water with 50 feet extension cable, and (d) 50 mm water without extension cable.

In order to investigate the effects of the cable length on the pulse-echo responses, two cable lengths were prepared; one is a built-in cable (~1 ft) cable and the other is approximately a 50 ft, which is used in field test. The received waveform from the steel pipe that contains water at room temperature was analyzed to investigate the influence of the amplitude and echoes pulse length with different cable length, and the results are shown in Figure 9. Note that the probe without extension cable provides higher amplitude compared to the probe with the 50 ft extension cable; however, the effect is negligible in terms of pulse length, i.e., axial resolution.

The developed hardware and software, the integrated breadboard system with wireless communication were tested in a manhole. The measured condensed water height as a function of date ranging from June to September, 2013 is demonstrated in Figure 10, where the height is in the range of 6 - 10 mm, and there were in the range of uncertainty for the measurements due to resolution and reflections identification limits. Figure 11 shows the measured temperature in the electronic system compared with the New York City temperature. The system was subjected to the field conditions, where the electronic box was subjected to immersion in hot water (and probably with corrosive content) in the instrument manhole. The CPU temperature was observed to reach over 95˚C and was operated for over 4 months from June to September, 2013 without visible or functional damage.

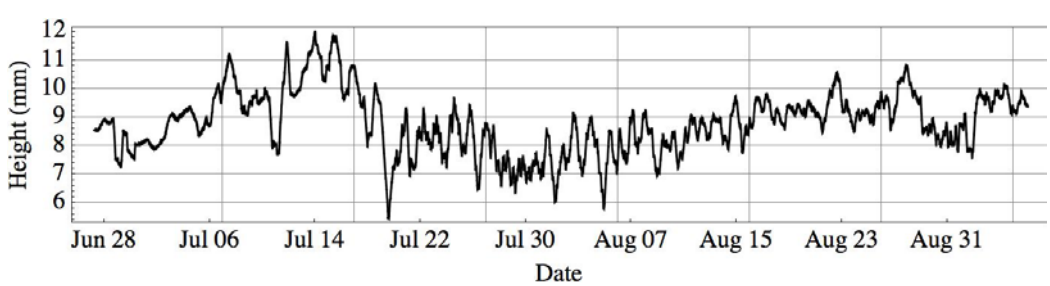

Figure 10: Height change in the steam pipe from June to September, 2013

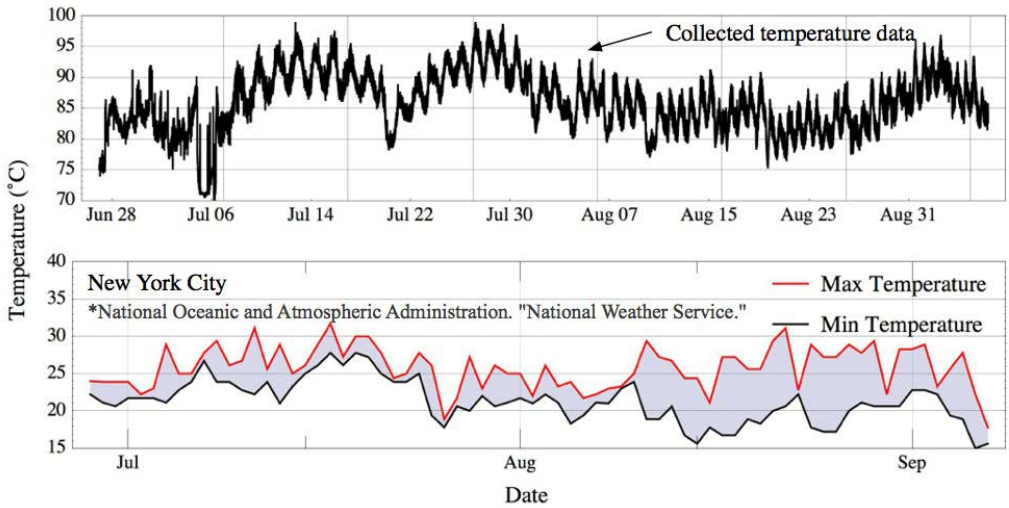

Figure 11: Temperature change in the steam pipe from June to September, 2013

6. Conclusions and Future Work

The prototype of high temperature health monitoring system was developed at the level of a breadboard, and the prototype system was installed at a selected manhole. The developed system includes high temperature ultrasonic probe, electronic system that support ultrasonic probes, a strapping fixture that allows "blind" alignment of the probe without the need for presence of water as an alignment reference, and computer algorithm that analyzes the acquired reflected waves from the water surface. The ultrasonic probe was installed on the steam pipe whose wall temperature is approximately 202 ˚C with high humidity environment, while the electronic box that consists of a pulser/receiver, pre-amplifier, and the control electronics was installed at a distance from the steam pipe inside the manhole, and the box was subjected up to 85% humidity with +70 ˚C (CPU ~100 ˚C). Over four months, the developed health monitoring system measured and tracked the height of the condensed water, and the hardware and data were controlled and transferred using the integrated wireless modem with the control electronics. Their signals concurred satisfactorily with the data of tested devices for level control, were reliable and high speed operation was demonstrated.

For future work, the main focus is to develop probes and software to address the real-world issues of the condensed water in manholes. The developed software had been made to address ideal conditions of the steam pipe where the water surface is parallel to the bottom surface of the pipe with sufficient condensates, which is quite ideal relative to the field conditions in the manhole. The development of the software will be done interactively where the lessons learned from the field test in this task. The software will conduct data acquisition; analysis and determination of the water height as well as characterizing the conditions of the pipe and the water (identify turbulence, etc.). The latter will involve establishing a data base for the categorization of the received signals in terms of what they indicate about the conditions of the tested pipe. This is feasible since the reflected signals are affected by the conditions of the path between the probe and the water surface and therefore containing related information. In order to maximize the reliability of the testing several probes and a multiplexer will be used in each manhole. Anomalies that will not be clear, in terms of interpreting of their source/cause, will be sought in other pipe as well as examination of the conditions in the specific pipe to determine the cause.

ACKNOWLEDGEMENT

Some of the research reported in this Chapter was conducted at the Jet Propulsion Laboratory (JPL), California Institute of Technology, under a contract with National Aeronautics and Space Administration (NASA). The authors would like to thank Josephine Aromando, Dowlatram Somrah, and Rommel Villanueva, for their support of this task and for the inputs, comments and helpful suggestions regarding the health monitoring of the height of condensed water in steam pipes.

REFERENCE

Bar-Cohen Y., S. Lih, M. Badescu, X. Bao, S. Sherrit, S. Widholm and J. Blosiu, "In-service monitoring of steam pipe systems at high temperatures" *Proc. SPIE*, 1-6 (2010).

Bar-Cohen Y., S. Lih, M. Badescu, X. Bao, S. Sherrit, S. Widholm, P. Ostlund, and J. Blosiu, "High temperature monitoring the height of condensed water in steam pipes," *Proc. SPIE*, 7–10 (2011).

Berlincourt, D., "Ultrasonic Transducer Materials," (New York: Plenum, 1971) Chap. 2. Piezoelectric Crystals and Ceramics, pp. 63–124.

Damjanovic, D., "Materials for high temperature piezoelectric transducers," Curr. Opin. Solid State Mater. Sci., 3, 469–473 (1998).

Jaffe, B., Cook, W. R., and H. Jaffe, Piezoelectric Ceramics (New York: Academic, 1971).

Kaˇzys, R., A. Voleiˇsis,, and B. Voleiˇsiene˙, "High temperature ultrasonic transducers: review," Ultragarsas (Ultrasound) 63, 7–17 (2008).

Lee H. J., Y. Bar-Cohen. S.-S. Lih, M. Badescu, X. Bao, S. Sherrit, N. Takano, P. N. Ostlund, and P. Blosiu, "High temperatures health monitoring of the condensed water height in steam pipe systems", Conf. on Sensors and Smart Structures Technologies for Civil, Mechanical, and Aerospace Systems, in the SPIE's 19th Annual International Symposium on Smart Structures and Materials, paper No. 8695-40, March 10-14, 2013

Lin C-W and J P M Trusler. The speed of sound and derived thermodynamic properties of pure water at temperatures between (253 and 473) K and at pressures up to 400 MPa. *J Chem Phys*, 136(9):094511, 2012.

Lih S.-S., Y. Bar-Cohen, H. J. Lee, N. Takano and X. Bao, "Advanced Signal Processing for High Temperatures Health Monitoring of Condensed Water Height in Steam Pipes", SPIE's Smart Structures and NDE, paper No. 8695-130, March 10-14, 2013

Nowacki K., and W. Kasprzyk, "The Sound Velocity in an Alloy Steel at High-Temperature Conditions," Int. J. Thermophys., 31, 103–112 (2009).

Oruklu, E., Y. Lu, and J. Saniie, "Hilbert transform pitfalls and solutions for ultrasonic NDE applications," IEEE International Ultrasonics Symposium (IUS), 2004 –2007 (2009).

Schmerr, L. and S. Song, Ultrasonic nondestructive evaluation systems: models and measurements (Springer Verlag, 2007).