JPL Publication 15-6

Radioisotope Power Systems Reference Book for Mission Designers and Planners

Radioisotope Power System Program Office

Young Lee
Brian Bairstow
Jet Propulsion Laboratory

National Aeronautics and
Space Administration

Jet Propulsion Laboratory
California Institute of Technology
Pasadena, California

September 2015

JPL Publication 15-6

Radioisotope Power Systems Reference Book for Mission Designers and Planners

Radioisotope Power System Program Office

Young Lee
Brian Bairstow
Jet Propulsion Laboratory

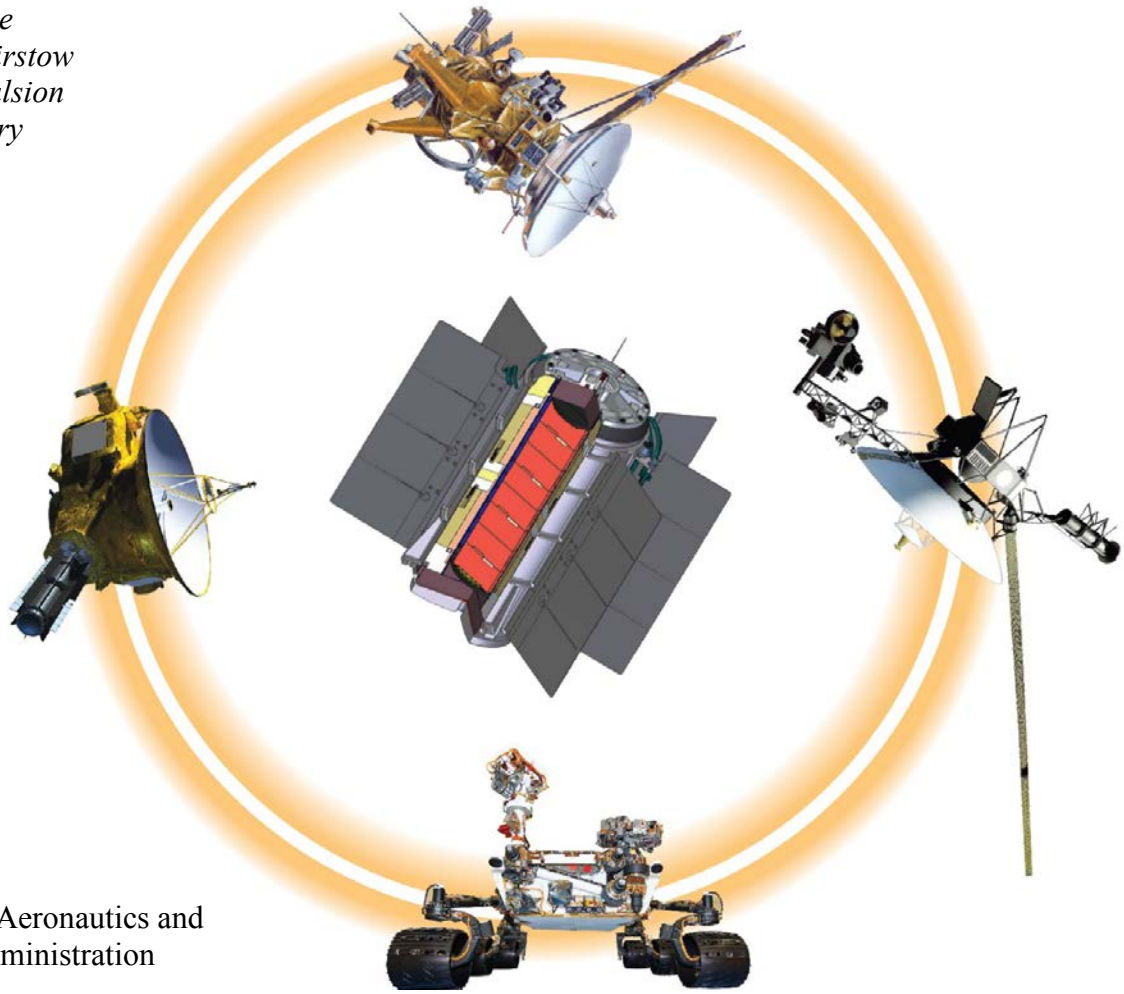

National Aeronautics and Space Administration

Jet Propulsion Laboratory
California Institute of Technology
Pasadena, California

September 2015

This document was generated by the Jet Propulsion Laboratory, California Institute of Technology, under a contract with the National Aeronautics and Space Administration. It summarizes research carried out at Jet propulsion Laboratory and by Glenn Research Center. For both facilities, funding was provided by the NASA Radioisotope Power Systems (RPS) Program Office at Glenn Research Center.

Reference herein to any specific commercial product, process, or service by trade name, trademark, manufacturer, or otherwise, does not constitute or imply its endorsement by the United States Government or the Jet Propulsion Laboratory, California Institute of Technology.

© 2015 California Institute of Technology. Government sponsorship acknowledged.

Abstract

The RPS Program's Program Planning and Assessment (PPA) Office commissioned the Mission Analysis team to develop the *Radioisotope Power Systems (RPS) Reference Book for Mission Planners and Designers* to define a baseline of RPS technology capabilities with specific emphasis on performance parameters and technology readiness. The main objective of this book is to provide RPS technology information that could be utilized by future mission concept studies and concurrent engineering practices. A progress summary from the major branches of RPS technology research provides mission analysis teams with a vital tool for assessing the RPS trade space, and provides concurrent engineering centers with a consistent set of guidelines for RPS performance characteristics. This book will be iterated when substantial new information becomes available to ensure continued relevance, serving as one of the cornerstone products of the RPS PPA Office.

This book updates the original 2011 internal document, using data from the relevant publicly released RPS technology references and consultations with RPS technologists. Each performance parameter and RPS product subsection has been reviewed and cleared by at least one subject matter representative. A virtual workshop was held to reach consensus on the scope and contents of the book, and the definitions and assumptions that should be used. The subject matter experts then reviewed and updated the appropriate sections of the book. The RPS Mission Analysis Team then performed further updates and crosschecked the book for consistency. Finally, a second virtual workshop was held to ensure all subject matter experts and stakeholders concurred on the contents

Acknowledgments

The relevance of this reference book depends on accurate information from RPS technology experts; therefore, the Mission Analysis team would like to express its sincere gratitude for the cooperation of personnel from GRC and JPL, as well as the NASA RPS Program Office. Thus, the Mission Analysis team would like to thank the following individuals for their support of the task in the original JPL internal document and/or in the update that became this book:

Johns Hopkins Applied Physics Laboratory (APL) – Richard Anderson and Paul Ostdiek

Glenn Research Center (GRC) – Jeff Briggs, Eric Clark, Robert Cataldo, Rodger Dyson, Natalie Goldin, Lee Mason, Paul Schmitz, Tom Sutliff, Katie Trase, David Wolford, and June Zakrajsek

Jet Propulsion Laboratory (JPL) – Rashied Amini , Gary Bolotin, Eric Brandon, Thierry Caillat, Debarati Chattopadhya, Joan Ervin, Richard Ewell, Jean-Pierre Fleurial, Jacklyn Green, Doug Isbell, M. Omair Khan, Nicholas Keyawa, Jared Lang, Bill Nesmith, Tom Spilker, Raquel Weitl, and David Woerner

Table of Contents

1 EXECUTIVE SUMMARY, PRODUCTS, AND ASSUMPTIONS 1

1.1 Executive Summary 1
1.2 Products 1
1.3 Assumptions 2
1.4 Contact Information 3

2 RPS CONVERSION TECHNOLOGIES 3

2.1 Thermoelectric Conversion 3
2.1.1 Introduction 3
2.1.2 RTG History in Space 3
2.1.3 RTG Conversion Technology 5
2.1.4 Product Performance 6
2.2 Stirling Conversion 6
2.2.1 Introduction 6
2.2.2 SRG History 6
2.2.3 Stirling Conversion Technology 7
2.2.4 Product Performance 10
2.2.5 Bibliography 10

3 CURRENT SYSTEMS 11

3.1 Multi-Mission Radioisotope Thermoelectric Generator (MMRTG) 11
3.1.1 Introduction 11
3.1.2 MMRTG Design 11
3.1.3 System Considerations 14
3.1.4 Schedule 16
3.1.5 References and Bibliography 17

4 SYSTEM IN DEVELOPMENT 18

4.1 Enhanced Multi-Mission Radioisotope Thermoelectric Generator (eMMRTG) 18
4.1.1 Introduction 18
4.1.2 eMMRTG Conceptual Design 18
4.1.3 System Considerations 20
4.1.4 Schedule 22
4.1.5 References and Bibliography 23

5 APPENDIX A – PAST SYSTEMS 24

5.1 Multi-Hundred Watt Radioisotope Thermoelectric Generator (MHW-RTG) 24
5.1.1 Introduction 24
5.1.2 Power Conversion Technology 25
5.1.3 Configuration 26
5.1.4 System Considerations 26
5.1.5 Schedule 27
5.1.6 Bibliography 27
5.2 General Purpose Heat Source Radioisotope Thermoelectric Generator (GPHS-RTG) 28
5.2.1 Introduction 28
5.2.2 Power Conversion Technology 29
5.2.3 Configuration 30
5.2.4 System Considerations 31

5.2.5 Schedule 32
5.2.6 References and Bibliography 32

6 APPENDIX B – POTENTIAL FUTURE SYSTEMS – LOW POWER 34

6.1 RHU-based Radioisotope Thermoelectric Generator (RHU-based RTG) 34
6.1.1 Introduction 34
6.1.2 Power Conversion Technology 35
6.1.3 Notional Configuration 35
6.1.4 System Considerations 35
6.1.5 Schedule 36
6.1.6 References and Bibliography 36
6.2 Small Radioisotope Thermoelectric Generator (Small RTG) 37
6.2.1 Introduction 37
6.2.2 Power Conversion Technology 39
6.2.3 Configuration 39
6.2.4 System Considerations 40
6.2.5 Schedule 40
6.2.6 Bibliography 41
6.3 Small Stirling Radioisotope Generator (Small SRG) 42
6.3.1 Introduction 42
6.3.2 Power Conversion Technology 42
6.3.3 Configuration 43
6.3.4 System Considerations 44
6.3.5 Schedule 45
6.3.6 Reference 45

7 APPENDIX C – POTENTIAL FUTURE SYSTEMS – MEDIUM POWER 46

7.1 Advanced Stirling Radioisotope Generator (ASRG) 46
7.1.1 Introduction 46
7.1.2 Power Conversion Technology 46
7.1.3 Configuration 49
7.1.4 Nominal Operations 52
7.1.5 Schedule 56
7.1.6 References 57

8 APPENDIX D – POTENTIAL FUTURE SYSTEMS – HIGH POWER 58

8.1 Segmented Thermoelectric & Modular Radioisotope Thermoelectric Generator (STEM-RTG) 58
8.1.1 Introduction 58
8.1.2 Power Conversion Technology 60
8.1.3 Configuration 60
8.1.4 System Considerations 61
8.1.5 Schedule 62
8.1.6 References 62
8.2 High Power Stirling Radioisotope Generator (HPSRG) 64
8.2.1 Introduction 64
8.2.2 Power Conversion Technology 65
8.2.3 Configuration 66
8.2.4 System Considerations 66
8.2.5 Schedule 68
8.2.6 References and Bibliography 69
8.3 Modular Stirling Radioisotope Generator (MSRG) 70
8.3.1 Introduction 70
8.3.2 Power Conversion Technology 70

8.3.3 Configuration *71*
8.3.4 System Considerations *72*
8.3.5 Schedule *73*
8.3.6 Bibliography *73*

9 APPENDIX E - RADIOISOTOPE HEATER UNIT 74

9.1 Introduction 74
9.2 Configuration 74
9.3 System Considerations 76
9.4 Programmatic Considerations 76
9.5 References 76

10 APPENDIX F - ACRONYMS AND ABBREVIATIONS 77

Figures

Figure 1. Schematic diagram of a single RTG thermocouple connected to an electric load. 5
Figure 2. Change in nominal MMRTG output power over a 14-year mission lifetime assuming a conservative initial power output of 107 W_e and a total degradation rate of 4.8% per year. 13
Figure 3. MMRTG configuration. 14
Figure 4. eMMRTG configuration concept. 20
Figure 5. MHW-RTG internal layout. 24
Figure 6. MHW-RTG configuration. 25
Figure 7. GPHS-RTG configuration. 28
Figure 8. Exploded view of Si-Ge unicouple used in the GPHS-RTG. 29
Figure 9. Change in nominal GPHS-RTG output power and total GPHS module input power over lifetime. 30
Figure 10. Conceptual Hi-Z 40 mW_e RHU-based RTG. 34
Figure 11. Conceptual non-spring loaded Small RTG for a Mars rover mission. 37
Figure 12. GPHS-based Small RTG concept with MMRTG-type spring-loaded thermoelectrics. 38
Figure 13. Notional Small SRG configuration. 43
Figure 14. Projected ASRG system input (GPHS modules [W_t]) and output (ASRG operations [W_e]) power. 47
Figure 15. Projected ASRG power output with respect to sink temperature in ideal vacuum conditions. 48
Figure 16. ASRG configuration showing orientation axes. The controller is mounted along the housing X–Z face 49
Figure 17. ASRG configuration showing dimensions without fins, gas management valve, and pressure relief device. Including fins, gas management valve and pressure relief device, dimensions are 0.762 m length (Z-axis) by 0.457 m height (Y-axis) by 0.394 m width (X-axis) based on orientation axes in Figure 16. The overall dimensions of the controller unit are 0.204 m length by 0.153 m height by 0.115 m width. 50
Figure 18. ASRG block diagram. 51
Figure 19. ASRG configuration with subsystem labels. 51
Figure 20. ASRG configuration showing cooling loop integration locations. Indicative of a conceptual user-provided active cooling system (ACS) approach and mounting interfaces. 52

Figure 21. ASRG-induced gamma dose as a function of distance. 53
Figure 22. ASRG-induced neutron fluence as a function of distance. 53
Figure 23. ASRG-induced neutron fluence as a function of distance 54
Figure 24. Disturbance force to the spacecraft during normal operation. 55
Figure 25. Disturbance force to the spacecraft during single-ASC operation. 55
Figure 26. Conceptual STEM-RTG configurations based on 4 GPHS module stackable segment design. 58
Figure 27. Potential generator configurations for the 6-GPHS and 8-GPHS SRG. 65
Figure 28. Conceptual GPHS Configurations for the MSRG. 71
Figure 29. Conceptual STEM-RTG configurations based on 4 GPHS module stackable segment design. 75
Figure 30. Variable Radioisotope Heater Unit concept. 75

Tables

Table 1. Summary of several past and current RTG-powered missions. 4
Table 2. RTG product family performance parameters. (Systems will be described in greater detail in subsequent sections.) 8
Table 3. Potential Stirling product family performance parameters. (Systems will be described in greater detail in subsequent sections.) 9
Table 4. MMRTG performance characteristics. 11
Table 5. Nominal MMRTG operating characteristics. 15
Table 6. MMRTG random vibration requirements. 16
Table 7. MMRTG pyroshock requirements. 16
Table 8. MMRTG history. 16
Table 9. Projected eMMRTG performance characteristics. 18
Table 10. Nominal eMMRTG operating characteristics. 21
Table 11. eMMRTG random vibration requirements. 22
Table 12. eMMRTG pyroshock requirements. 22
Table 13. eMMRTG project schedule. 22
Table 14. Top-level MHW-RTG characteristics. 25
Table 15. Nominal MHW-RTG operating characteristics. 26
Table 16. MHW-RTG missions. 27
Table 17. Top-level GPHS-RTG characteristics. 28
Table 18. GPHS-RTG subsystems and mass breakdown. 31
Table 19. Nominal GPHS-RTG operating characteristics. 31
Table 20. GPHS-RTG missions. 32
Table 21. Conceptual Hi-Z 40 mW_e RHU-based RTG performance characteristics. 35
Table 22. Nominal conceptual RHU-based RTG operation characteristics, assuming operation in atmosphere. 36
Table 23. Top-level parameters for a conceptual Small RTG using heritage thermoelectrics. 38
Table 24. Top-level conceptual 1-GPHS Small RTG performance characteristics using advanced thermoelectrics. 39
Table 25. Top-level conceptual 3-GPHS Small RTG performance characteristics using advanced thermoelectrics. 39
Table 26. Nominal conceptual 1-GPHS Small RTG operation characteristics, assuming advanced TE technology in vacuum. 40
Table 27. Conceptual Small SRG operational characteristics. 42

Table 28. Critical subsystems for the Small SRG concept. 43
Table 29. Nominal conceptual Small SRG operating characteristics. 44
Table 30. Projected Small SRG project schedule. 45
Table 31. Nominal ASRG performance characteristics. 46
Table 32. ASRG critical subsystems and functionality. 48
Table 33. Projected ASRG mass breakdown. 49
Table 34. Nominal ASRG operation characteristics. 52
Table 35. Potential ASRG fault modes. 56
Table 36. Projected ASRG milestones. 57
Table 37. Conceptual 4-GPHS STEM-RTG performance characteristics. 59
Table 38. Conceptual 8-GPHS STEM-RTG performance characteristics. 59
Table 39. Conceptual 12-GPHS STEM-RTG performance characteristics. 59
Table 40. Conceptual 16-GPHS STEM-RTG performance characteristics. 60
Table 41. Nominal conceptual 4-GPHS STEM-RTG operating characteristics. 61
Table 42. Nominal conceptual 8-GPHS STEM-RTG operation characteristics. 61
Table 43. Nominal conceptual 12-GPHS STEM-RTG operating characteristics. 61
Table 44. Nominal conceptual 16-GPHS STEM-RTG operation characteristics. 62
Table 45. Projected STEM-RTG project schedule. 63
Table 46. Conceptual 4-GPHS SRG performance characteristics. 64
Table 47. Conceptual 6-GPHS SRG performance characteristics. 64
Table 48. Conceptual 8-GPHS SRG performance characteristics. 65
Table 49. Critical subsystems for the High Power SRG concept. 66
Table 50. Nominal conceptual 4-GPHS SRG operating characteristics. 67
Table 51. Nominal conceptual 6-GPHS SRG operating characteristics. 67
Table 52. Nominal conceptual 8-GPHS SRG operating characteristics. 68
Table 53. Potential High Power SRG project schedule. 69
Table 54. Conceptual MSRG Performance Characteristics. 70
Table 55. Critical subsystems for the MSRG concept. 71
Table 56. Conceptual MSRG operating characteristics. 73
Table 57. Modular SRG project schedule. 73
Table 58. Top-level RHU parameters. 74

1 Executive Summary, Products, and Assumptions

1.1 Executive Summary

The Radioisotope Power System (RPS) Program's Program Planning and Assessment (PPA) Office commissioned the RPS Mission Analysis team to develop this reference book to define the current baseline of RPS technology capabilities, with specific emphasis on performance parameters and technology readiness. The main objective of this book is to provide RPS technology information that could be utilized by future NASA mission concept studies and concurrent engineering practices. A progress summary from the major branches of RPS technology research provides mission analysis teams with a vital tool for assessing the RPS trade space, and provides concurrent engineering centers with a consistent set of guidelines for RPS performance characteristics. This book will be iterated when substantial new information becomes available to ensure continued relevance, serving as one of the cornerstone products of the RPS PPA Office.

This book updates the original 2011 internal document (*NSPO RPS Systems Reference Book*)[1], using data from the relevant publicly released RPS technology references and consultations with RPS technologists. Each performance parameter and RPS product subsection has been reviewed and cleared by at least one subject matter representative. A virtual workshop was held to reach consensus on the scope and contents of the book, and the definitions and assumptions that should be used. The subject matter experts then reviewed and updated the appropriate sections of the book. The RPS Mission Analysis Team then performed further updates and crosschecked the book for consistency. Finally, a second virtual workshop was held to ensure all subject matter experts and stakeholders concurred on the contents.

1.2 Products

This book summarizes the current and proposed RPS product families, and provides detailed discussions of specific technologies. Among the technologies and products considered are:

- RPS Product Performance Parameters Table
- RPS Conversion Technologies
  - Thermoelectric Conversion
  - Stirling Conversion Current Systems
- Current RPS System
  - Multi-Mission Radioisotope Thermoelectric Generator (MMRTG)
- RPS System in Development
  - Enhanced Multi-Mission Radioisotope Thermoelectric Generator (eMMRTG)

[1] R. Amini, D. Chattopadhyay, J. Ervin, M. O. Khan, J. Lang, T. Spilker, and R. Witl, *NSPO RPS Systems Reference Book*, D-28878 (internal document), Jet Propulsion Laboratory, California Institute of Technology, Pasadena, CA, Sept. 2011.

There are also a number of past and potential future RPS products that are detailed in the appendices:

- Past Systems
  - Multi-Hundred Watt Radioisotope Thermoelectric Generator (MHW-RTG)
  - General Purpose Heat Source-Radioisotope Thermoelectric Generator (GPHS-RTG)
- Potential Future Systems
  - Low Power
    - RHU-based Radioisotope Thermoelectric Generator (RHU-based RTG)
    - Small Radioisotope Thermoelectric Generator (Small RTG)
    - Small Stirling Radioisotope Generator (Small SRG)
  - Medium Power
    - Advanced Stirling Radioisotope Generator (ASRG)
  - High Power
    - Segmented Thermoelectric and Modular Radioisotope Thermoelectric Generator (STEM-RTG)
    - High Power Stirling Radioisotope Generator (HPSRG)
    - Modular Stirling Radioisotope Generator (MSRG)

1.3 Assumptions

For reference, the following global assumptions were applied to this book:

- Unless otherwise stated, the average thermal output of a single General Purpose Heat Source (GPHS) module is assumed to be 250 watts thermal (W_t) at beginning of life (BOL). The Department of Energy (DOE) estimates a potential variance of ± 6 watts electrical (W_e) (~2.4%).
- Unless otherwise stated, a GPHS module (used in the MMRTG and currently projected future GPHS-based systems) is assumed to contain 0.44 kg of plutonium-238 (Pu-238).
- The mass of Step 2 GPHS modules, used in all but the GPHS-RTGs, is assumed to be 1.61 kg per module.
- Beginning of Mission (BOM) performance values are those predicted at launch, which is assumed to be 3 years after fueling.
- End of design life [EODL] performance values are calculated for 14 years after launch (17 years after fueling).

1.4 Contact Information

Researchers and mission planners seeking the most current information and/or material that can only be shared in a proprietary setting may contact the Radioisotope Power System Program office mission analysis lead by accessing the **https://solarsystem.nasa.gov/rps/home**.cfm web page or emailing *rps@nasa.gov*.

2 RPS Conversion Technologies

2.1 Thermoelectric Conversion

2.1.1 Introduction

The radioisotope thermoelectric generator (RTG) family of products is the state of the practice in RPS technology with proven flight heritage. RTG products use the Seebeck effect to convert heat to electrical energy. RTGs are considered a relatively low risk power system option given their high flight heritage and benign fault modes. However, RTGs are also relatively inefficient due to low conversion efficiencies and specific powers. The next four sections of this reference book provide details about RTG history, products currently available, and those under research and development.

2.1.2 RTG History in Space

RTGs are a family of radioisotope power systems that use direct thermoelectric conversion to generate electric power. Since the early 1960s, RTGs have been long-lived and highly reliable power sources for more than two-dozen Earth-orbiting and planetary missions. RTG flight system designs progressed from the Systems for Nuclear Auxiliary Power (SNAP) series, to the Multi-hundred Watt Radioisotope Thermoelectric Generators (MHW-RTG), to RTGs based on the GPHS.

The SNAP series of RTGs included a number of different configurations. SNAP-19 is discussed in this book due to its relevance to current MMRTG technology: it used PbTe/TAGS [lead telluride/tellurides of antimony, germanium, and silver] as the thermoelectric material in the converters, producing 40 W_e per unit. SNAP-19 RTGs powered the Viking 1 and 2 Mars landers, and the Pioneer 10 and 11 outer-planet flyby missions.

The MHW-RTG had a much higher power output than the SNAP series (~160 W_e); it used silicon-germanium (Si-Ge) thermoelectrics. The MHW-RTG was most notably used on the Voyager 1 and Voyager 2 missions, launched in 1977 and still operating in 2015.

After the MHW-RTG, the DOE developed the GPHS module to provide a standard, modular plutonium dioxide-based heat source. This GPHS module has been the basis of the RTGs developed since then. The GPHS-RTG was the first of these standardized designs, using 18 GPHS modules and Si-Ge thermoelectrics to generate nearly 300 W_e. The GPHS-RTG has been used very successfully on four planetary missions: Galileo, Ulysses, Cassini and New Horizons. The MMRTG is the newest addition to the family of RTG flight units, using updated Step 2 GPHS modules, and is currently powering the Mars Science Laboratory (MSL) rover Curiosity, which was launched in 2011 and has been exploring the Red Planet since August 2012.

Table 1 provides a summary of several of the RTG-powered missions flown to date, including all of the missions since development of the MHW-RTG. As mentioned, of the SNAP series, only the SNAP-19 is listed here, as it is the most relevant to current RTG systems.

Table 1. Summary of several past and current RTG-powered missions.

	Pioneer 10	Pioneer 11	Viking 1	Viking 2	Voyager 1&2	Galileo	Ulysses	Cassini	New Horizons	Mars Science Laboratory
Launch Date	March 02, 1972	April 05, 1973	August 20, 1975	September 09, 1975	September 05, 1977 and August 20, 1977	October 18, 1989	October 6, 1990	October 15, 1997	January 19, 2006	November 26, 2011
Mission Status	January 2003 (last contact)	November 1995 (last contact)	November 1982	April 1980	Continuing	September 2003	June 2009	Continuing	Continuing	Continuing
Mission Type	Planetary flyby	Planetary flyby	Mars Lander	Mars Lander	Planetary flyby	Jupiter orbiter	Solar/space physics	Saturn orbiter	Pluto flyby	Mars rover
Type of RTG	SNAP-19	SNAP-19	SNAP-19	SNAP-19	MHW-RTG	GPHS-RTG	GPHS-RTG	GPHS-RTG	GPHS-RTG	MMRTG
Number of	4	4	2	2	3	2	1	3	1	1
RTG mass (per unit)	15.2 kg	15.2 kg	15.2 kg	15.2 kg	38 kg	56 kg	56 kg	56 kg	56 kg	45 kg
RTG status	RTGs operated for >31 years	RTGs operated for >22 years	RTGs operated for 6 years until Lander was shut down	RTG operated for 4 years until relay link was lost.	RTGs still operating	Spacecraft de-orbited September 21, 2003	RTGs still operating	RTGs still operating	RTGs still operating	RTGs still operating

2.1.3 RTG Conversion Technology

RTGs utilize the Seebeck effect, in which a temperature difference between two different materials creates an electric potential difference. In an RTG, a temperature difference is maintained between the two ends of a thermoelectric material to generate electric power. The natural decay of Pu-238 provides the heat required to raise the temperature of the hot side of the thermocouple, and the ambient environment lowers the temperature of the cold side of the thermocouple, via the generator housing. Since each individual thermocouple can provide only a small voltage difference, many thermocouples connected in series provide the required system output voltage. The efficiency of the thermocouple depends on the temperature difference between its hot and cold sides, and the material properties of its thermoelectrics; different materials yield different efficiencies. The RPS Program's Advanced Thermoelectric Converter (ATEC) research project is developing and testing new, higher efficiency thermoelectric couples for possible use in the next generation of RTGs. Figure 1 illustrates an RTG thermocouple.

The heat flow path in an RTG starts in the structure containing the plutonium heat source (such as a GPHS module), and it continues through the thermoelectric material, to the external environment through radiation or convection from the outer housing and fins of the RTG unit. The amount of power generated by an RTG decreases over time due to a combination of reduced heat production from radioactive decay of the radioisotope fuel and degradation of thermocouple performance. Thermocouple performance may degrade over time due to precipitation of dopants in the material, sublimation of the thermocouple material, or changes in thermal conductivity of unicouple alloys. The output power degradation due to thermocouple degradation is ~0.8% per year, depending on the material and the operating conditions. Radioactive decay of the Pu-238 causes additional degradation at ~0.8% per year. The RTG products in this book all use the same principle of energy conversion, but differences in the amount of radioisotope fuel, thermoelectric materials, and sink temperatures can result in different output powers.

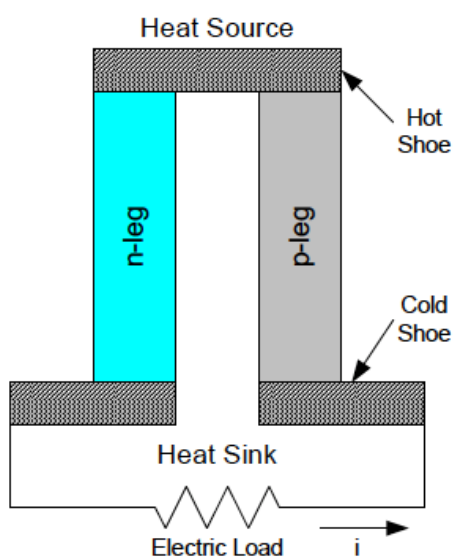

Figure 1. Schematic diagram of a single RTG thermocouple connected to an electric load.

2.1.4 Product Performance

Variations in requirements for the range of operating environments for an RTG, and advances in technology, have yielded RTG products with a range of performance characteristics. Table 2 lists the performance of past, current, and potential future RTG-based systems discussed in this book. The GPHS-RTG technology was replaced by the MMRTG, which is currently operating on the Curiosity rover. Conceptual designs for future RTGs are also being studied. Higher-efficiency (>8.0%) thermoelectric materials are being developed in the ATEC development project. Materials such as Zintl[2], lanthanum telluride, and skutterudite (SKD),[3] have been identified as candidate thermocouple materials capable of operating over high temperature differences for extended periods of time. An enhanced MMRTG (eMMRTG) may be developed by utilizing such high-efficiency thermoelectric couples to produce BOL power output of ~150 W_e. Multiple conceptual designs for an advanced RTG have been studied at various power levels, most recently a modular design (the STEM-RTG) that could be tailored to a mission's power needs. Several lower power RTG designs are also being considered, from RHU-based RTGs producing milliwatts of power, to Small RTGs using one to three GPHS modules to generate tens of watts of power for smaller missions.

While currently there are no missions committed to using any of the conceptual RTGs, there have been many mission concept studies have shown that these technologies would be enabling for certain aspects of Solar System exploration. Since the RTG is a static system with no moving parts, unlike dynamic SRG systems, it is likely to be preferred in cases where the payload would be vibration-sensitive, such as seismometric landers. Current RTG technology is limited to technologies that were developed after the MHW-RTG, thus only the GPHS-RTG, MMRTG, RHU-based RTG, Small RTG, eMMRTG, and STEM-RTG are discussed in detail in the following sections.

2.2 Stirling Conversion

2.2.1 Introduction

The Stirling Radioisotope Generator (SRG) family of potential products represents a potential change in paradigm from traditional RTGs. SRGs would use the Stirling thermodynamic cycle (a closed dynamic cycle) to convert heat to electrical energy rather than the static power conversion of RTGs. This dynamic cycle would provide higher efficiencies and would use less fuel than RTGs to produce similar power levels, making them a potentially attractive option for future RPS.

2.2.2 SRG History

DOE awarded three contracts in August 2000 for the conceptual design of a 100-W_e class Stirling radioisotope generator (SRG110). The goal was to develop a generator that would meet a generic set of specifications that were representative of the requirements of future deep space missions. In 2006, a decision was made to replace the existing SRG110 convertor with an

[2] A "Zintl" is really a "Zintl phase" and is a general term for a compound that is made up of a rare earth/alkaline earth or alkali metal and/or a transition metal and/or metalloid (e.g. Sb and As). They are often characterized by complex cationic and anionic bonding with complete electron transfer. There are many different types of Zintls, Yb14MnSb11 is one such material (and is incorrectly referred to as "Zintl"). Zintls are named for the German chemist Eduard Zintl who investigated them in the 1930s.

[3] Skutterudite is a cobalt arsenide mineral that has variable amounts of nickel and iron substituting for cobalt with a general formula: $(Co,Ni,Fe)As_3$. Skutterudite was named after its discovery locality, Skutterud, Modum, Norway.

Advanced Stirling Convertor (ASC) from Sunpower Inc., and the project was renamed the Advanced Stirling Radioisotope Generator (ASRG).

In 2010, the ASRG was offered as government-furnished equipment for the NASA Discovery 12 Announcement of Opportunity (AO), which allowed for the optional use of RPS to be proposed. Launch was expected in 2016, and at the time of the AO, it was expected that ASRG could be ready for flight by 2015. Neither of the proposed ASRG-powered missions were selected for the Discovery 12 for reasons not related to the ASRG. The ASRG project continued into the fall of 2013 when it was canceled due to NASA planetary science budgetary constraints. Research on the ASRG's convertors (ASCs) continues as a non-flight hardware project at NASA. Additionally, work on both larger and smaller SRGs is currently underway at GRC.

2.2.3 Stirling Conversion Technology

The Stirling cycle is a closed dynamic thermodynamic cycle that features - at least in the ideal cycle - constant temperature heat input and heat extraction. In the case of the Free Piston Stirling Engine (FPSE), gas (helium in the ASRG) is shuttled back and forth between the hot and cold sections of the Stirling convertor using a device called a displacer. Work is extracted via the linear sinusoidal motion of the power piston coupled to a moving magnet linear alternator. FPSE used for space systems operate at a constant frequency during their life and the stroke of the power piston can be varied to change the temperature/power set points of the convertor.

SRGs generally consist of GPHS modules, a Stirling-cycle convertor(s), a controller, and a structure to add and remove heat from the convertor. The temperature ratio between the hot end of the Stirling convertor (acceptor) from the GPHS and the cold end of the Stirling (rejector) from the ambient environment drive the Stirling cycle. The motion of the convertor's power piston is coupled to an alternator that generates single-phase AC current, which is rectified to DC and sent to the spacecraft by the controller. SRG operating parameters (piston amplitude, temperature, etc.) are monitored and set by the controller, and they are used to ensure nominal operation. The controller can also adjust the piston stroke amplitude to accommodate the decreased GPHS module heat output or environmental changes over time and thereby maximize power output.

All of the SRG concepts described in this book follow this same principle of energy conversion, but with variations in generator power output, architecture, and varying numbers of GPHS modules. Four generator architectures are discussed in this section. The first is the ASRG, which is the generator furthest along in development. Second is a derivative of the ASRG called the Small SRG and is essentially ½ of an ASRG modified to operate on the lunar surface along with a new controller. Next is a family of High-Power SRG conceptual designs that would extend the basic architecture of the ASRG to accommodate increases in the number of GPHS modules and increased power output. Finally there is the Modular SRG, which would maintain the high efficiency of the Stirling cycle but sacrifice specific power to provide a highly fault tolerant design.

Table 2. RTG product family performance parameters. (Systems will be described in greater detail in subsequent sections.)

	Present Systems	Systems In Development	Potential Future Systems								Past Systems	
			Low Power				High Power					
	MMRTG	**eMMRTG**	**RHU-based RTG**	**1-GPHS Heritage Small RTG**	**1-GPHS Advanced Small RTG**	**3-GPHS Advanced Small RTG**	**4-GPHS STEM-RTG**	**8-GPHS STEM-RTG**	**12-GPHS STEM-RTG**	**16-GPHS STEM-RTG**	**MHW-RTG**	**GPHS-RTG**
RPG Configuration	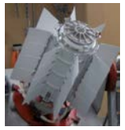			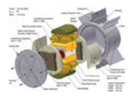		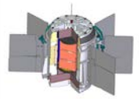			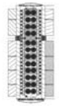	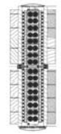		
Conversion Type	Passive	Passive	Passive	Passive	Passive	Passive	Passive	Passive	Passive	Passive	Passive	Passive
Operating Environment	Vacuum and Atmosphere	Vacuum and Atmosphere	Vacuum and Atmosphere	Vacuum and Atmosphere	Vacuum and Atmosphere	Vacuum and Atmosphere	Vacuum	Vacuum	Vacuum	Vacuum	Vacuum	Vacuum
Power Output (W_e) (1)							(2)	(2)	(2)	(2)		
Vacuum [BOM]	108	146	0.04	12.5	21	64	93	205	314	425	157	285
Vacuum [EODL]	55	103	0.03	10	16	48	71	156	239	324	125	227
Mars Atm [BOM]	107	143	TBS	TBS	TBS	TBS	N/A	N/A	N/A	N/A	N/A	N/A
Mars Atm [EODL]	55	101	TBS	TBS	TBS	TBS	N/A	N/A	N/A	N/A	N/A	N/A
Mass (kg)	45	45	0.33	6	10	20	16.2	28	41	52.8	37.7	56
Specific Power (W_e/kg)												
Vacuum [BOM]	2.4	3.2	0.12	2.1	2.1	3.2	5.7	7.3	7.7	8.0	4.2	5.1
Vacuum [EODL]	1.2	2.3	0.09	1.7	1.6	2.4	4.4	5.6	5.8	6.1	3.3	4.1
Mars Atm [BOM]	2.4	3.2	TBS	TBS	TBS	TBS	N/A	N/A	N/A	N/A	N/A	N/A
Mars Atm [EODL]	1.2	2.2	TBS	TBS	TBS	TBS	N/A	N/A	N/A	N/A	N/A	N/A
Conversion Efficiency (%)												
Vacuum [BOM]	5.4	7.3	4	5.0	8.4	8.5	9.5	10.5	10.7	10.9	6.5	6.3
Vacuum [EODL]	3.1	5.9	3.4	4.6	7.3	7.3	8.1	8.9	9.1	9.2	5.9	5.6
Mars Atm [BOM]	5.4	7.2	TBS	TBS	TBS	TBS	N/A	N/A	N/A	N/A	N/A	N/A
Mars Atm [EODL]	3.1	5.8	TBS	TBS	TBS	TBS	N/A	N/A	N/A	N/A	N/A	N/A
Power Deg. Rate (Vacuum) (%/year)	4.8	2.5	1.6	1.6	2.5	2.5	1.6	1.6	1.6	1.6	1.6	1.6
No. GPHS Modules	8	8	0 (1 RHU)	1	1	3	4	8	12	16	N/A	18
Pu-238 Mass (kg)	3.5	3.5	0.002	0.44	0.44	1.32	1.8	3.5	5.3	7.0	4.5 (3)	7.6 (3)
Dimensions (meter)	0.65 diameter (fin tip to tip), 0.69 length	0.65 diameter (fin tip to tip) 0.69 length	0.06 diameter 0.12 length	0.24 diameter (fin tip to tip) 0.14 length	0.64 diameter (fin tip to tip) 0.17 length	0.64 diameter (fin tip to tip) 0.34 length	0.40 diameter (fin tip to tip) 0.36 length	0.45 diameter (fin tip to tip) 0.57 length	0.47 diameter (fin tip to tip) 0.84 length	0.47 diameter (fin tip to tip) 1.07 length	0.40 diameter (fin tip to tip) 0.58 length	0.422 diameter, 1.14 length
Heat Rejection Energy (W_t) (1)												
Vacuum [BOM]	1892	1854	0.96	238	229	686	907	1795	2686	3575	2243	4215
Vacuum [EODL]	1697	1649	0.85	209	203	609	805	1596	2389	3180	1840	3794
Mars Atm [BOM]	1893	1857	TBS	TBS	TBS	TBS	N/A	N/A	N/A	N/A	N/A	N/A
Mars Atm [EODL]	1697	1651	TBS	TBS	TBS	TBS	N/A	N/A	N/A	N/A	N/A	N/A
Cold End Temperature (K) [BOM]	483	308	323	323	323	323	523	473	523	473	573	566
Vibration Disturbance Force (N)	N/A	N/A	N/A	N/A	N/A	N/A	N/A	N/A	N/A	N/A	N/A	N/A
Vibration Frequency (Hz)	N/A	N/A	N/A	N/A	N/A	N/A	N/A	N/A	N/A	N/A	N/A	N/A
TRL	9	4	4	3	2	2	2	2	2	2	9	9
Development Status / Flight History	MSL	In process of technology transfer from JPL to Teledyne	Development units built and tested	Design concept	Design concept	Design concept	Expand from single couple modules to multi-couple modules	Expand from single couple modules to multi-couple modules	Expand from single couple modules to multi-couple modules	Expand from single couple modules to multi-couple modules	Voyager 1, Voyager 2, Lincoln Experimental Satellites 8 and 9	Galileo, Ulysses, Cassini, New Horizons
Next Development Milestone	eMMRTG	Preparing for Gate 1 Review for skutterudite technology	10,000 g shock resistance, technology maturation	Technology maturation	TE development to TRL 3-4	TE development to TRL 3-4	TE development to TRL 3-4	TE development to TRL 3-4	TE development to TRL 3-4	TE development to TRL 3-4	Discontinued	Discontinued

BOM = Beginning of Missions (3 years after fueling)
EODL = End of Design Life (14 years after launch, 17 years after fueling)
(1) Based on 250 Wt per GPHS module, unless otherwise noted
(2) Based on 244 Wt per GPHS module
(3) GPHS-RTG used an early version of GPHS module; MHW-RTG used Pu238 oxide spheres

Table 3. Potential Stirling product family performance parameters. (Systems will be described in greater detail in subsequent sections.)

	Potential Future Systems							
	Low Power	Medium Power	High Power					
	Small SRG	**ASRG**	**4-GPHS High Power SRG**	**6-GPHS High Power SRG**	**8-GPHS High Power SRG**	**1-GPHS Modular SRG**	**4-GPHS Modular SRG**	**8-GPHS Modular SRG**
RPG Configuration	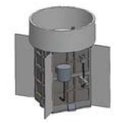				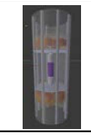		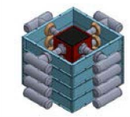	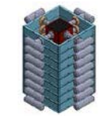
Conversion Type	Active	Active	Active	Active	Active	Active	Active	Active
Operating Environment	Vacuum and Atmosphere	Vacuum and Atmosphere	Vacuum	Vacuum	Vacuum	Vacuum	Vacuum	Vacuum
Power Output (W_e) (1)						(2)	(2)	(2)
Vacuum [BOM]	59	137	232	357	492	51	227	462
Vacuum [EODL]	48	115	193	297	409	43	193	393
Mars Atm [BOM]	49	115	N/A	N/A	N/A	N/A	N/A	N/A
Mars Atm [EODL]	40	103	N/A	N/A	N/A	N/A	N/A	N/A
Mass (kg)	17.5	31	32	46.8	64.6	21	36	134
Specific Power (W_e/kg)								
Vacuum [BOM]	3.4	4.4	7.3	7.6	7.6	2.4	6.3	3.4
Vacuum [EODL]	2.7	3.7	6.0	6.3	6.3	2.0	5.4	2.9
Mars Atm [BOM]	2.8	3.7	N/A	N/A	N/A	N/A	N/A	N/A
Mars Atm [EODL]	2.3	3.3	N/A	N/A	N/A	N/A	N/A	N/A
Conversion Efficiency (%)								
Vacuum [BOM]	24	27	23.2	23.8	24.6	20.4	22.7	23.1
Vacuum [EODL]	22	26	22.0	22.6	23.3	19.6	22.0	22.4
Mars Atm [BOM]	20	23	N/A	N/A	N/A	N/A	N/A	N/A
Mars Atm [EODL]	18	23	N/A	N/A	N/A	N/A	N/A	N/A
Power Deg. Rate (Vacuum) (%/year)	1.16	1.16	1.16	1.16	1.16	1.16	1.16	1.16
No. GPHS Modules	1	2	4	6	8	1	4	8
Pu-238 Mass (kg)	0.44	0.88	1.8	2.6	3.5	0.4	1.8	3.5
Dimensions (meter)	TBS	0.762 x 0.457 x 0.394	0.33 diameter 0.45 length	0.33 diameter 0.65 length	0.36 diameter 0.95 length	0.30 diameter 0.13 length	0.30 diameter 0.30 length	0.30 diameter 0.54 length
Heat Rejection Energy (W_t) (1)						(2)	(2)	(2)
Vacuum [BOM]	165	330	733	1089	1433	179	715	1431
Vacuum [EODL]	145	288	TBS	TBS	TBS	158	634	1271
Mars Atm [BOM]	185	345	N/A	N/A	N/A	N/A	N/A	N/A
Mars Atm [EODL]	165	313	N/A	N/A	N/A	N/A	N/A	N/A
Cold End Temperature (K) [BOM]	313	313	450	450	430	410	410	410
Vibration Disturbance Force (N)	2	3	3	3	3	10	10	10
Vibration Frequency (Hz)	102.2	102.2	100	100	100	100	100	100
TRL	3-4	3-4	2-3	2-3	2-3	2-3	2-3	2-3
Development Status / Flight History	Component validated in environment	Build and test of qualification units	Technology concept has been formulated	Technology concept has been formulated	Technology concept has been formulated	Technology concept has been formulated	Technology concept has been formulated	Technology concept has been formulated
Next Development Milestone	System model demonstration in operational environment	Build and test of flight units	Analytical and experimental proof of concept	Analytical and experimental proof of concept	Analytical and experimental proof of concept	Analytical and experimental proof of concept	Analytical and experimental proof of concept	Analytical and experimental proof of concept

BOM = Beginning of Missions (3 years after fueling)
EODL = End of Design Life (14 years after launch, 17 years after fueling)
(1) Based on 250 Wt per GPHS module, unless otherwise noted
(2) Based on 244 Wt per GPHS module
(3) GPHS-RTG used an early version of GPHS module; MHW-RTG used Pu238 oxide spheres

2.2.4 Product Performance

No SRGs are currently mature enough to be considered for flight. However, many mission concept studies have shown the great potential value of such systems, and further development could spur other ideas. As the Stirling cycle is approximately four times as efficient as thermoelectric conversion, Stirling conversion technologies could be important for allowing far greater electrical power per thermal watt of fuel. This would effectively extend the U.S. supply of Pu-238 reserved for civil space exploration (including new fuel slated to be produced in the 2020s) while simultaneously reducing the thermal burden on a mission. Additionally the low degradation rates of SRGs as a function of mission time should provide a significant improvement over RTGs for typical long-duration outer planet missions. Table 3 provides a summary of the projected performance of several SRG systems concepts.

2.2.5 Bibliography

R.G. Ross, Jr. and R.F. Boyle. "An Overview of NASA Space Cryocooler Programs—2006" Presented at the International Cryocooler Conference, Annapolis, MD, June 2006.

3 Current Systems

3.1 Multi-Mission Radioisotope Thermoelectric Generator (MMRTG)

3.1.1 Introduction

The Multi-Mission Radioisotope Thermoelectric Generator (MMRTG) is the current state-of-the-art RPS and the only RTG for use in space currently in production. Unlike most RTGs, the MMRTG is designed to operate in planetary atmospheres as well as in vacuum. Beyond the Curiosity rover, an MMRTG is the baseline power system for the Mars 2020 rover currently under development toward launch in July 2020.

The MMRTG design is derived from the design of the SNAP-19 generator used on NASA's Pioneer and Viking missions. However, the SNAP-19 used some but not all of the thermoelectric materials used in the MMRTG. The SNAP-19 used PbTe/TAGS where the MMRTG adds PbSnTe to the PbTe/TAGS thermoelectric couples. The MMRTG's use of plutonium dioxide packaged in GPHS modules is another significant upgrade from the SNAP-19 generators.

Produced by the DOE, each GPHS contains four pellets of plutonium dioxide fuel, each clad in iridium metal and several layers of graphite and carbon-fiber material for protection during potential accident conditions. Each MMRTG uses eight GPHSs. An MMRTG is required to provide 107 W_e at 28 volts in a 270 K (–3°C) thermal sink (which approximates a hot day on Mars) at beginning of mission (BOM—BOM is defined as shortly after launch), when the thermal inventory of 250 W_t per GPHS at the time of fueling; see Table 4 for details.

Table 4. MMRTG performance characteristics.

Parameter	MMRTG value	
Power (vacuum, 4 K (–269°C) sink)	108 W_e BOM (After a max of 3 years of storage)	55 W_e EODL (After 17 years)
Power (Mars hot day, 270 K (–3°C) sink)	107 W_e BOM (After a max of 3 years of storage)	55 W_e EODL (After 17 years)
System mass	45.0 kg (with cooling tubes)	
System mass	43.6 kg (without cooling tubes)	
Dimensions	0.68 m in length, 0.65 m from fin tip to fin tip	
Operating environments	Vacuum, planetary atmospheres, launch, landing, pyroshock, etc.	
System lifetime	17 years (3 years storage plus 14 years in-flight)	

The current technology readiness level (TRL) of the MMRTG is 9, given that it has successfully launched and has been providing mission power for four years and counting.

The RPS Program is considering the development of an enhanced MMRTG (eMMRTG) that would upgrade the thermoelectric couples to provide greater BOM (~25%) and significantly greater end-of-design-life (EODL) power; see Section 4, System in Development, in this reference book for details.

3.1.2 MMRTG Design

The MMRTG design can be viewed as consisting of three assemblies: the GPHS assembly, the converter assembly, and the converter housing. The GPHS assembly holds eight GPHS modules.

The converter assembly, which consists of spring-loaded thermoelectric couples, is where heat is converted to electrical power. The converter housing provides the conductive pathway between the cold side of the thermoelectric couples and the environment, as well as structural support and mounting interfaces with the spacecraft.

3.1.2.1 GPHS Assembly

The GPHS assembly is essentially a tube that houses the eight GPHS modules that heat the MMRTG. The tube, or isolation liner, separates the GPHSs from the converter assembly and transfers heat from the GPHS modules to the converter assembly. The GPHS assembly is sealed with a helium-permeable gasket to allow helium formed by the decay of Pu-238 to escape to space. The helium conducts heat from the GPHS modules to the liner wall and into the converter assembly.

3.1.2.2 Converter Assembly

The converter assembly routes heat from the GPHS assembly to 768 thermoelectric couples of lead telluride (PbTe) and tellurides of antimony, germanium and silver (TAGS) to produce electricity. The heat from the GPHS assembly first passes through a heat distribution block that mechanically mates with the thermoelectrics. Each thermoelectric couple is spring-loaded to hold it in place and compress the thermoelectrics to the heat distribution block (HDB). This interface between the HDB and thermoelectrics is deemed the "hot side." From this location, the temperature along the length of each thermoelectric couple "leg" drops. The temperature difference between the hot side and cold side of the thermoelectric couple generates an electric potential that powers spacecraft loads.

Each couple forms a link in two, series-parallel chains of couples to provide fault protection should a single couple fail. The loss of a single couple represents a negligible loss of power.

The power output of the MMRTG decays over time primarily due to natural decay of the plutonium dioxide fuel and degradation of the thermoelectric couples. The expected power degradation rate for the MMRTG is ~3.5 to 4.8% per year depending upon the environment imposed by a mission; data from Curiosity shows a 4.8% degradation rate in a Mars environment, a strong match with predictions. Figure 2 shows the nominal power output over the 14-year mission lifetime for the MMRTG, assuming 4.8% degradation per year.

To reduce degradation of the thermoelectric couples at high temperatures, an inert cover gas mixture of argon and helium is used to suppress the sublimation rate of the thermoelectric materials.

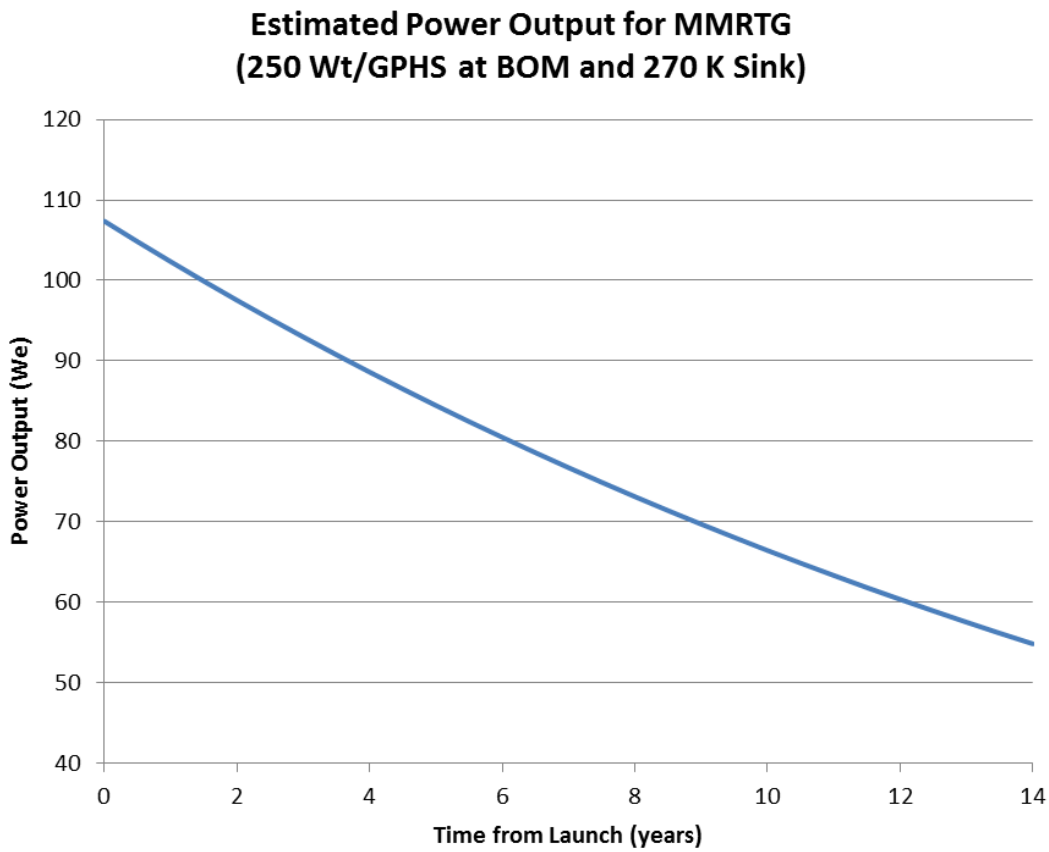

Figure 2. Change in nominal MMRTG output power over a 14-year mission lifetime assuming a conservative initial power output of 107 W_e and a total degradation rate of 4.8% per year.

3.1.2.3 Converter Housing

The outer shell of the MMRTG is an aluminum housing with eight radial fins. The MMRTG converter housing has an overall diameter of 0.65 m and a length of 0.69 m, including the cooling fins. The housing hermetically seals the converter assembly and cover gas within the MMRTG, and provides the necessary electrical and mechanical interfaces to the spacecraft.

The electrical interface is a single connector that routes power and telemetry to the spacecraft harness. The telemetry consists of temperature measurements captured by platinum resistance thermometers (PRTs) in the MMRTG.

The mechanical interfaces include the four-bolt mounting interface, cooling tubes, the fins, and the optical surface properties of the MMRTG. The mounting interface is indicated in Figure 3. The cooling tubes can be attached to the base of each radial fin for active cooling if needed. The tubes can also be used to route waste heat from the MMRTG to the spacecraft. The fins are used to dump waste heat "over-board" and keep the MMRTG operating under its maximum temperature limit. The optical properties of the MMRTG come largely from the paint on the MMRTG; Curiosity carries an MMRTG with white paint, but black paints are available if desired.

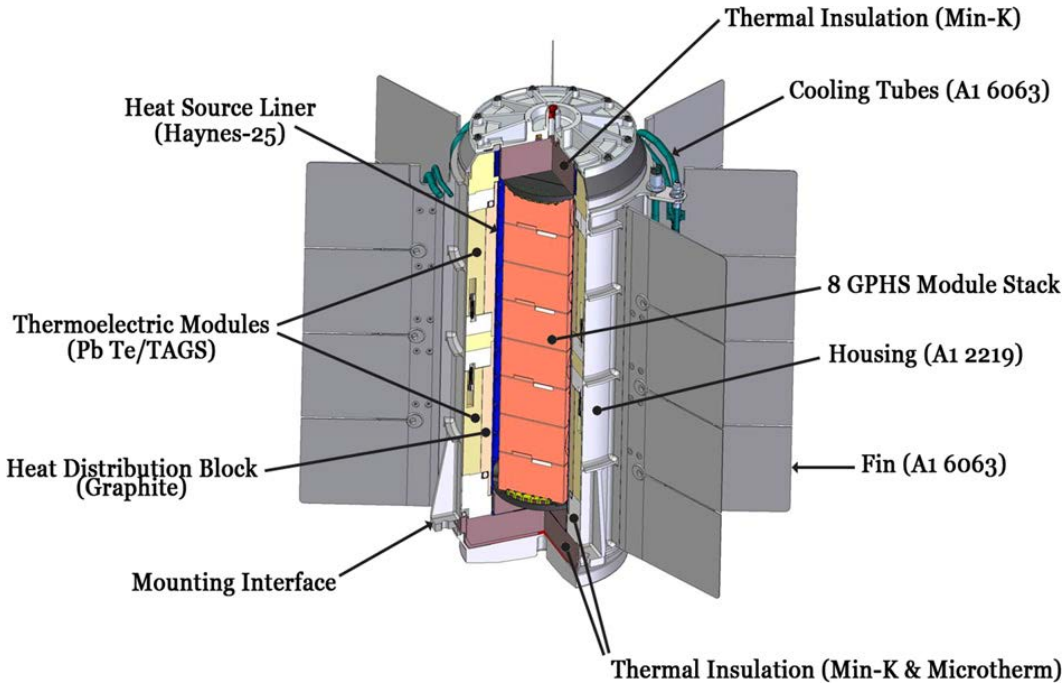

Figure 3. MMRTG configuration.

3.1.3 System Considerations

3.1.3.1 Nominal Operations

The MMRTG has both accommodation requirements and effects on its environment. It can operate either in vacuum or in planetary atmospheres. In vacuum, it tolerates exposure to a 4 K sink temperature without insolation, and with insolation, the fin root temperatures must be held (–269°C) below the maximum allowable, 200°C. The MMRTG was designed for the atmosphere of Mars. The Martian atmosphere is 5–10 mbar of mostly CO_2 at temperatures between 150 and 278 K (–123 and +5°C). In addition, the constituents of Titan's atmosphere were studied and found to be non-detrimental; the temperature of Titan's atmosphere is below the allowable operating range, however, and so the unit would have to be insulated or protected while in the Titan atmosphere (see the MMRTG system requirements document, which can be obtained by contacting the Mission Analysis Lead by accessing the **https://solarsystem.nasa.gov/rps/home**.cfm web page or emailing *rps@nasa.gov*. (Note: Distribution of the requirements document is limited to individuals within NASA or contracting with NASA on radioisotope power systems.) Table 5 further tabulates some of the MMRTG's characteristics.

In addition to affecting its local environment via the heat it radiates from its housing and fins, electrical currents within the MMRTG produce external magnetic fields. At 1 m from an MMRTG's centerline, the maximum magnetic field strength is required to be less than 25 nT.

The MMRTG must be integrated into the spacecraft at the launch site. Thus, the design of a spacecraft must accommodate integration of the MMRTG(s) at the launch facility. Several issues arise due to this relatively late integration of the generator(s), such as cleanliness restrictions and constrained access to the payload for RTG integration. In the case of the Mars Science Laboratory, the Atlas V 541 launch vehicle stacking was done prior to the MMRTG integration,

so mission-specific access doors had to be built into the launch vehicle fairing to allow access for launch support personnel, the MMRTG, and integration equipment.

Table 5. Nominal MMRTG operating characteristics.

Parameter	MMRTG Value		Comments
Waste heat (Mars atmosphere)	1893 W_e [BOM]	1697 W_e [EODL]	Assumes 250 W_{th} per GPHS module (BOM); actual waste heat will vary
Cold-end temperature	483 K		
MMRTG-induced vibration	None		Static system
Magnetic field	<25nT		At 1 m from MMRTG
G-loading limit	25g		At launch + 1 year
Random-vibe loading limit	<0.2 g^2/Hz peak		During Launch
Max allowable average fin-root temp	200C		Not to be exceeded

3.1.3.2 Thermal Compliance

Up to 1893 W_t of heat produced by the GPHS modules must be rejected by each MMRTG by radiation or convection through the outer housing and fins, or removed conductively through cooling loops that can be attached at the base of the fins. This waste heat can be routed to other parts of the spacecraft if needed to warm spacecraft components.

3.1.3.3 Mechanical Compliance

The maximum landing load the MMRTG can withstand is 25 g, and it is designed to withstand the random vibration environment for NASA's Evolved Expendable Launch Vehicle (EELV). It can also withstand the pyroshock from EELV upper stage separation, as well as payload fairing jettison. Table 6 and Table 7 show the random vibration and pyroshock requirements on the MMRTG design.

3.1.3.4 Fault Protection

The MMRTG's electrical circuit is in a dual-string, series-parallel wiring configuration, with thermoelectric couples cross-strapped so that current can continue to flow even if a single couple is lost or damaged. This design is robust to the failure of a single couple in each pair, i.e., failure of one couple would result in loss of the power from that couple only.

Table 6. MMRTG random vibration requirements.

Frequency, Hz	EELV	
	Qual Test	FA Test
20 – 50	+ 3dB/oct.	+3 dB/oct.
50 – 250	0.20 g^2/Hz*	0.10 g^2/Hz
250 – 350	-6.0 dB/oct.	-6.0 dB/oct.
350 – 1000	0.10 g^2/Hz	0.05 g^2/Hz
1000 – 2000	-12 dB/oct.	-12 dB/oct.
Overall	12.4 g_{RMS}	8.7 g_{RMS}
*Note: The MMRTG was designed to 0.3 g^2/Hz (peak) and 15.1 g_{RMS} (overall) in order to withstand the higher launch vibration loads of the Delta IV Heavy. It was qualified to 0.2 g^2/Hz (peak) however.		

Table 7. MMRTG pyroshock requirements.

Frequency, Hz	Peak SRS Response (Q = 10)
100	40 g
100-2000	+10.0 dB/oct.
2000 -10000	6000 g

3.1.4 Schedule

Table 8 contains details on the MMRTG history. The MMRTG has completed development and has a flight unit in operation on the MSL Curiosity rover.

Table 8. MMRTG history.

MMRTG TRL level	9
Flight history	Operating on Curiosity
Next development milestone	Upgrade to eMMRTG

The MMRTG design heritage started in the early 2000's as the system to power Curiosity. The rover's planned launch date was 2009 but was delayed until 2011. Since the MMRTG was fueled with plutonium dioxide in 2008, it had been in storage for about three years by launch, and had operated for almost four years by its landing, yet it produced 114 W_e at that time.

The technology readiness level (TRL) for an MMRTG in the environment of Mars is 9. The MMRTG has not flown for a deep space or lunar surface mission, but would still be considered TRL 9 for these vacuum environments; from a mechanical (seals, penetrations, etc.) or structural stand point, the surface pressure on Mars is a near vacuum (~10 mbar). However, some potential thermal environments, either warmer or colder, and convection surface pressures and winds differing from that on Mars (e.g. Titan, Europa) may need further testing for power output verification.

3.1.5 References and Bibliography

Hammel, T. E., Bennett, R., Keyser, S., Sievers, R., "Multi-Mission Radioisotope Thermoelectric Generator (MMRTG): Building on Success," Nuclear and Emerging Technologies for Space 2013 (NETS 2013), Albuquerque, NM, Feb. 2013.

Jones, L., Moreno, V., Zimmerman, R., "The F1 Multi-Mission Radioisotope Thermoelectric Generator (MMRTG): A Power Subsystem Enabler for the Mars Science Laboratory (MSL) Mission," Nuclear and Emerging Technologies for Space 2013 (NETS 2013), Albuquerque, NM, Feb. 2013.

"Multi-Mission Radioisotope Thermoelectric Generator Fact Sheet," web page, Jet Propulsion Laboratory, California Institute of Technology, Pasadena, CA. http://mars.jpl.nasa.gov/mars2020/files/mep/MMRTG_FactSheet_update_10-2-13.pdf

Woerner, D., Moreno, V., Jones, L., Zimmerman, R., and Wood, E., "The Mars Science Laboratory (MSL) MMRTG In-Flight: A Power Update," Nuclear and Emerging Technologies for Space 2013 (NETS 2013), Albuquerque, NM, Feb. 2013.

4 System in Development

4.1 Enhanced Multi-Mission Radioisotope Thermoelectric Generator (eMMRTG)

4.1.1 Introduction

The enhanced Multi-Mission Radioisotope Thermoelectric Generator (eMMRTG) is a design concept based upon replacing the thermocouples in the MMRTG with new advanced thermoelectric materials, while maintaining the same structural frame and design of the MMRTG and preserving or improving its functional requirements. The manufacturing techniques for the new thermoelectric materials are being transferred to industry via a partnership with Teledyne Energy Systems, Inc. (TESI); TESI was a key developer of the MMRTG. The process of technology transfer and new thermocouple engineering is called Technology Maturation, and at this time is slated to be complete by the end of FY18. This would put TESI in a position to produce multiple eMMRTGs for future missions. The full-scale development of the eMMRTG would be led and managed by the DOE.

As with the MMRTG, the eMMRTG is designed to operate in planetary atmospheres as well as in vacuum. The MMRTG uses PbSnTe and PbTe/TAGS thermoelectric couples with hot-junction temperatures around 500°C and cold-junction temperatures around 100–200°C (depending on the external environment). The eMMRTG would utilize Skutterudite (SKD) thermoelectric couples operating at hot-junction temperatures of 600°C and cold-junction temperatures around 100–200°C (depending on the external environment).

As with the MMRTG, the eMMRTG would use eight GPHS modules. An eMMRTG would be expected to provide about 154 W_e at 32 volts in a 270 K thermal sink, at beginning of life (BOL—BOL is defined as immediately after fueling) when the thermal inventory is about 250 Wt/GPHS; see Table 9 for further details.

Table 9. Projected eMMRTG performance characteristics.

Parameter	eMMRTG Value	
Power (Vacuum, 250Wth, Est by TESI, 11/7/13)	146 W_e BOM at 32V	103 W_e EODL at 32 V (After 17 years)
Power (Mars hot day, 250Wth, Est by TESI, 11/7/13)	143 W_e BOM at 32V	101 W_e EODL at 32 V (After 17 years)
System mass	~ 45.0 kg (with cooling tubes)	
System mass	~ 43.6 kg (without cooling tubes)	
Dimensions	0.69 m in length, 0.65 m from fin tip to fin tip	
Operating Environments	Vacuum, planetary atmospheres, launch, landing, shock, etc.	
System Lifetime	17 years (3 years storage plus 14 years in-flight)	

4.1.2 eMMRTG Conceptual Design

The eMMRTG design can be viewed as consisting of three assemblies: the GPHS assembly, the converter assembly, and the converter housing. The GPHS assembly would hold eight GPHS modules. The converter assembly, which consists of spring-loaded thermoelectric couples, is

where heat would be converted to electrical power. The converter housing provides the conductive pathway between the cold side of the thermoelectric couples and the environment as well as structural support and mounting interfaces with the spacecraft.

4.1.2.1 GPHS Assembly

The GPHS assembly is essentially a tube that houses the eight GPHS modules that would heat the eMMRTG. The tube, or isolation liner, would separate the GPHSs from the converter assembly and transfer heat from the GPHS modules to the converter assembly. In order to achieve higher operating temperatures on the hot-junction of the SKD thermoelectric couples for the eMMRTG, an emissive coating would be added to the inside of the isolation liner. The GPHS assembly would be sealed with a helium-permeable gasket to allow helium formed by the decay of Pu-238 to escape to space. The helium would conduct heat from the GPHSs to the liner wall and into the converter assembly.

4.1.2.2 Converter Assembly

The converter assembly would route heat from the GPHS assembly to 768 thermoelectric couples of n-type and p-type Skutterudites in order to produce electricity. The heat from the GPHS assembly would first pass through a heat distribution block that mechanically mates with the thermoelectric couples. Each thermoelectric couple would be spring-loaded to hold it in place and compress the thermoelectrics against the heat distribution block (HDB). This interface between the HDB and thermoelectrics is deemed the “hot side”. From this location, the temperature along the length of each thermoelectric couple “leg” would drop. The temperature difference between the hot side and cold side of the thermoelectric couple would generate an electric potential that powers spacecraft loads.

All couples would be electrically connected in a single series-parallel chain to provide fault protection should a single couple fail. The loss of a single couple would represent a negligible loss of power.

The power output of the eMMRTG would decay over time primarily due to natural decay of the heat source, Pu-238, and degradation of the thermoelectric couples. The expected power degradation rate for the eMMRTG would be ~2.5% per year, depending upon the environment imposed by a mission, about half the degradation rate of the MMRTG.

To minimize degradation of the thermoelectric couples at high temperatures, an inert cover gas—a mixture of argon and helium—would be used to suppress the sublimation rate of the thermoelectric materials and thus reduce the output power degradation.

4.1.2.3 Converter Housing

The outer shell of the eMMRTG would be an aluminum housing with eight radial fins. The eMMRTG converter housing would have an overall diameter of 0.65 m and a length of 0.69 m, including the cooling fins. The housing would hermetically seal the converter assembly and cover gas within the eMMRTG, and would provide the spacecraft interfaces, electrical and mechanical.

The electrical interface would be a single connector that routes power and telemetry to the spacecraft harness. The telemetry would consist of temperature measurements captured by platinum resistance thermometers (PRTs) in the eMMRTG.

The mechanical and thermal interfaces would include the four-bolt mounting interface, optional cooling tubes, and the optical properties of the outside surface of the eMMRTG. The mounting interface is indicated in Figure 4. The cooling tubes could be attached to the base of each radial fin for active cooling if needed. The tubes could also be used to route waste heat from the eMMRTG to the spacecraft. The fins would be used to dump waste heat "overboard" and keep the eMMRTG operating under its maximum temperature limit and white paint would provide the optical coating most suited for a Venus flyby. MSL flew the MMRTG with white paint, but black paints are available if required.

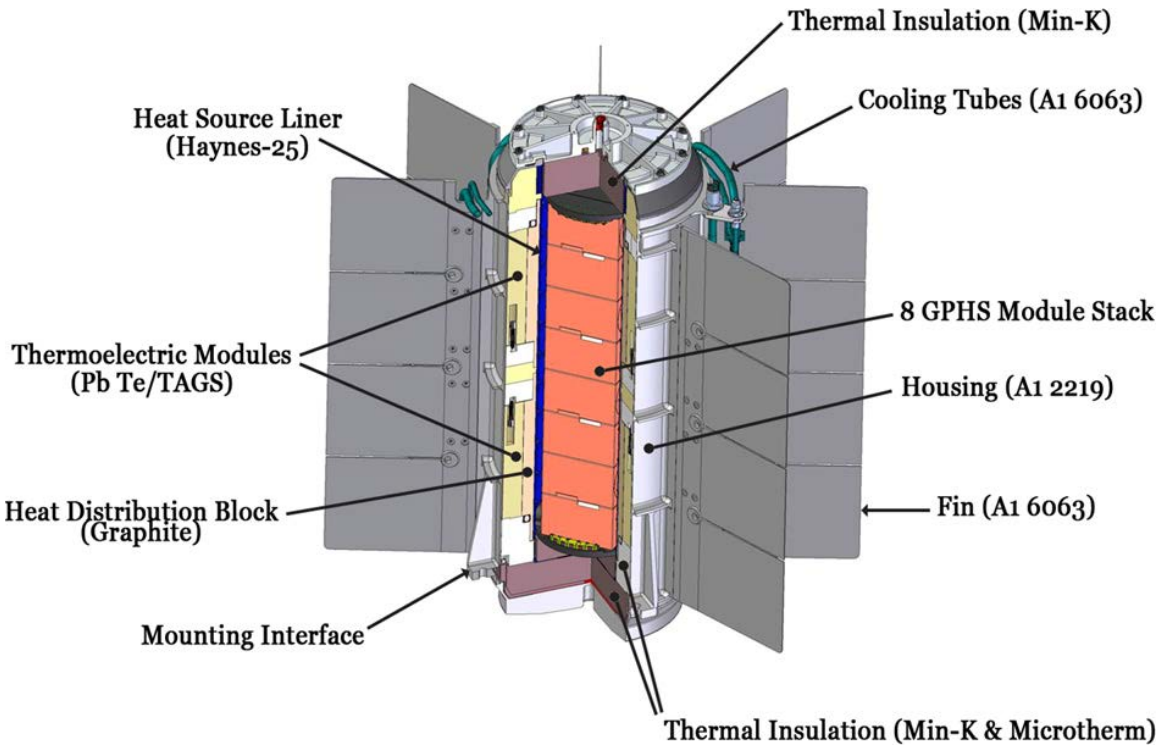

Figure 4. eMMRTG configuration concept.

4.1.3 System Considerations

4.1.3.1 Nominal Operations

The eMMRTG would have both accommodation requirements and effects on its environment. It could operate in either vacuum or in planetary atmospheres. In vacuum it would tolerate exposure to a 4 K (–269°C) sink temperature without insolation, and with insolation, the fin root temperatures must be held below the maximum allowable, 473 K (200°C). The planetary atmosphere for which the eMMRTG structure is designed is the Mars atmosphere. The Martian atmosphere is 5–10 mbar of mostly CO_2 at temperatures between 150 and 278 K (–123 and 5°C). Other atmospheres would likely be compatible and have been reviewed, but more detailed analyses are required to confirm compatibility. Table 10 further tabulates some of the eMMRTG's projected characteristics.

Table 10. Nominal eMMRTG operating characteristics.

Parameter	eMMRTG Value		Comments
Waste heat	1857 W_t [BOL]	1651 W_t [EODL]	Assumes 250 W_{th} per GPHS module (BOM); actual waste heat will vary
Cold-end temperature	308 K		
eMMRTG-induced vibration	none		Static system
Magnetic field	<25 nT		At 1m from eMMRTG
G-loading limit	25g		At launch + 1 year
Random-vibe loading limit	<0.2 g^2/Hz peak		During Launch
Max allowable average fin-root temp	200C		Not to be exceeded

An eMMRTG would need to be integrated into the spacecraft at the launch site. Thus the design of a spacecraft would need to accommodate integration of the eMMRTG(s) at the launch facility. Several issues would arise due to this relatively late integration of the generator(s), such as cleanliness restrictions and constrained access to the payload for RTG integration. In the case of Mars Science Laboratory, the Atlas V 541 launch vehicle stacking was done prior to the MMRTG integration, so mission-specific access doors had to be built into the launch vehicle fairing to allow access for launch support personnel, the MMRTG, and the integration equipment.

4.1.3.2 Thermal Compliance

Up to 1857 W_t of heat produced by the GPHS modules would need to be rejected by each eMMRTG by radiation or convection through the outer housing and fins, or removed conductively through cooling loops that can be attached at the base of the fins. This waste heat could be routed to other parts of the spacecraft if needed to warm spacecraft components.

4.1.3.3 Mechanical Compliance

The maximum landing load the eMMRTG could withstand is 25 g, and it would be designed to withstand the random vibration environment for NASA's Evolved Expendable Launch Vehicle (EELV). It could also withstand the pyroshock from EELV upper stage separation, as well as payload fairing jettison. Table 11 and Table 12 show the random vibration and pyroshock requirements on the eMMRTG design.

Table 11. eMMRTG random vibration requirements.

Frequency, Hz	EELV	
	Qual Test	FA Test
20 – 50	+ 3dB/oct.	+3 dB/oct.
50 – 250	0.20 g^2/Hz*	0.10 g^2/Hz
250 – 350	-6.0 dB/oct.	-6.0 dB/oct.
350 – 1000	0.10 g^2/Hz	0.05 g^2/Hz
1000 – 2000	-12 dB/oct.	-12 dB/oct.
Overall	12.4 g_{RMS}	8.7 g_{RMS}
*Note: The eMMRTG was designed to 0.3 g^2/Hz (peak) and 15.1 g_{RMS} (overall) in order to withstand the higher launch vibration loads of the Delta IV Heavy. It was qualified to 0.2 g^2/Hz (peak) however.		

Table 12. eMMRTG pyroshock requirements.

Frequency, Hz	Peak SRS Response (Q=10)
100	40 g
100-2000	+10.0 dB/oct.
2000 -10000	6000 g

4.1.3.4 Fault Protection

The eMMRTG's electrical circuit would have a dual-string, series-parallel wiring configuration, with thermoelectric couples cross-strapped so that current can continue to flow even if a single couple is lost or damaged. This design would be robust to the failure of a single couple in each pair, i.e., failure of one couple would result in loss of the power from that couple only.

4.1.4 Schedule

Table 13 contains details on the eMMRTG development schedule. The eMMRTG is currently in development, and is preparing for its Gate 1 Review to verify that the skutterudite thermoelectric technology was successfully transferred to Teledyne. The first flight unit is targeted to be complete in 2022, and additional units would be manufactured at a cadence according to mission demand.

Table 13. eMMRTG project schedule.

eMMRTG TRL Level	4
Current project milestone	In process of technology transfer from JPL to Teledyne
Next project milestone	Preparing for Gate 1 Review for skutterudite technology
Flight System completion target date	2022

The eMMRTG would be an enhanced version of the MMRTG; the significant design change is replacing the PbTe/TAGS thermoelectrics with SKD materials for the thermoelectric couples.

Other design changes (such as emissive coatings, the GPHS support structure, insulation and heat distribution analysis) would be required.

The eMMRTG design team's development plan (as of early 2014) shows a technology maturation completion by the end of FY 18 (TRL 5). Therefore, the majority of critical technology elements for the eMMRTG would be assessed currently at TRL 4.

4.1.5 References and Bibliography

Cailat, T., Firdosy, S., Li, B., Huang, C., Uhl, D., Smith, K., Paik, J., Fleurial, J.-P., Bennett, R., and Keyser, S., "Skutterudite-based Advanced Thermoelectric Couples for Integration into an Enhanced-MMRTG," Nuclear and Emerging Technologies for Space 2014 (NETS 2014), Stennis Space Center, MS, 2014.

Hammel, T., Keyser, S., and Sievers, B., "The Enhanced MMRTG – eMMRTG – Boosting MMRTG Power Output," Nuclear and Emerging Technologies for Space 2014 (NETS 2014), Stennis Space Center, MS, 2014.

Hammel, T., Otting, B., Bennett, R., and Sievers, B., "The eMMRTG – To Europa, Titan or Mars," Nuclear and Emerging Technologies for Space 2013 (NETS 2015), Albuquerque, NM, 2015.

Woerner, D. F., Cairns-Gallimore, D., Zakrajsek, J., and O'Malley, T., "Getting to an Enhanced MMRTG," Nuclear and Emerging Technologies for Space 2014 (NETS 2014), Stennis Space Center, MS, 2014.

5 Appendix A – Past Systems

5.1 Multi-Hundred Watt Radioisotope Thermoelectric Generator (MHW-RTG)

5.1.1 Introduction

The Multi-Hundred Watt Radioisotope Thermoelectric Generator (MHW-RTG) was developed for the Voyager missions. It was fueled by 24 spherical containers for plutonium dioxide, as shown in Figure 5, rather than the standardized GPHS modules used in current RPS. The MHW-RTG operated only in vacuum. The configuration is shown in Figure 6. Table 14 gives its performance characteristics.

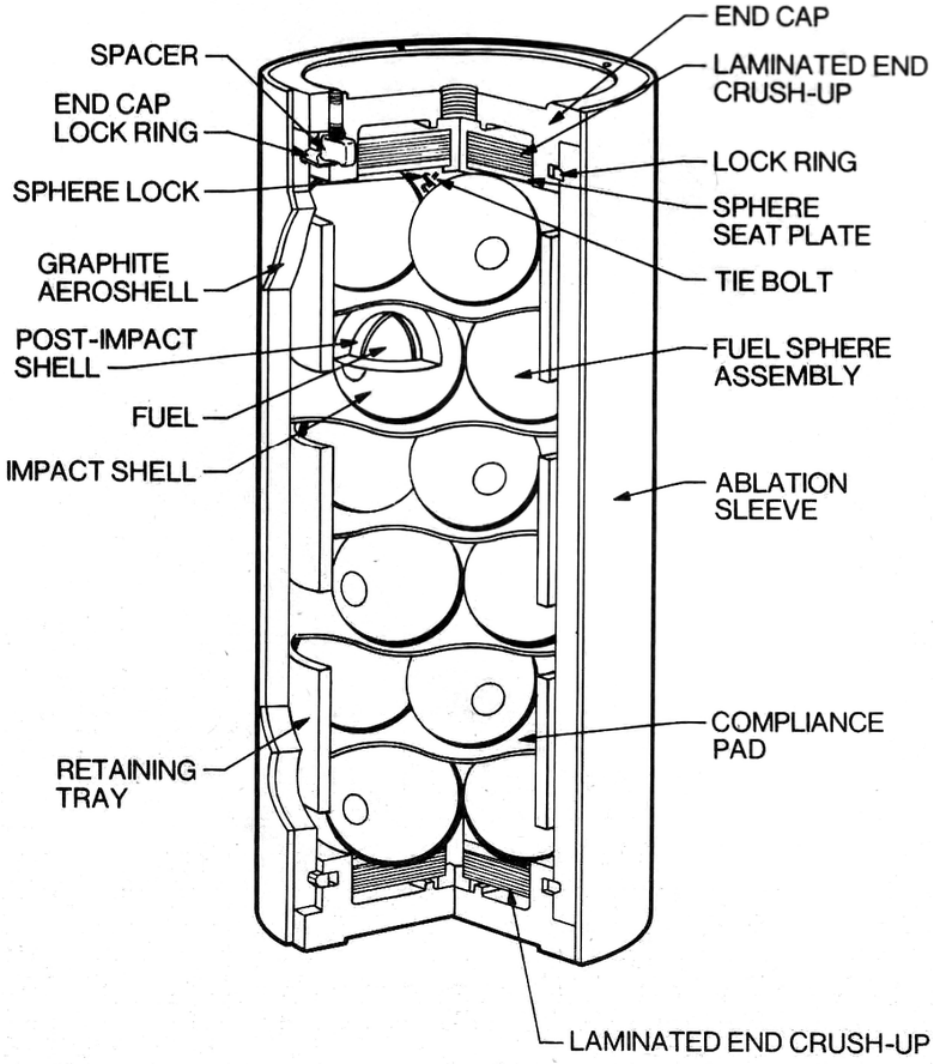

Figure 5. MHW-RTG internal layout.

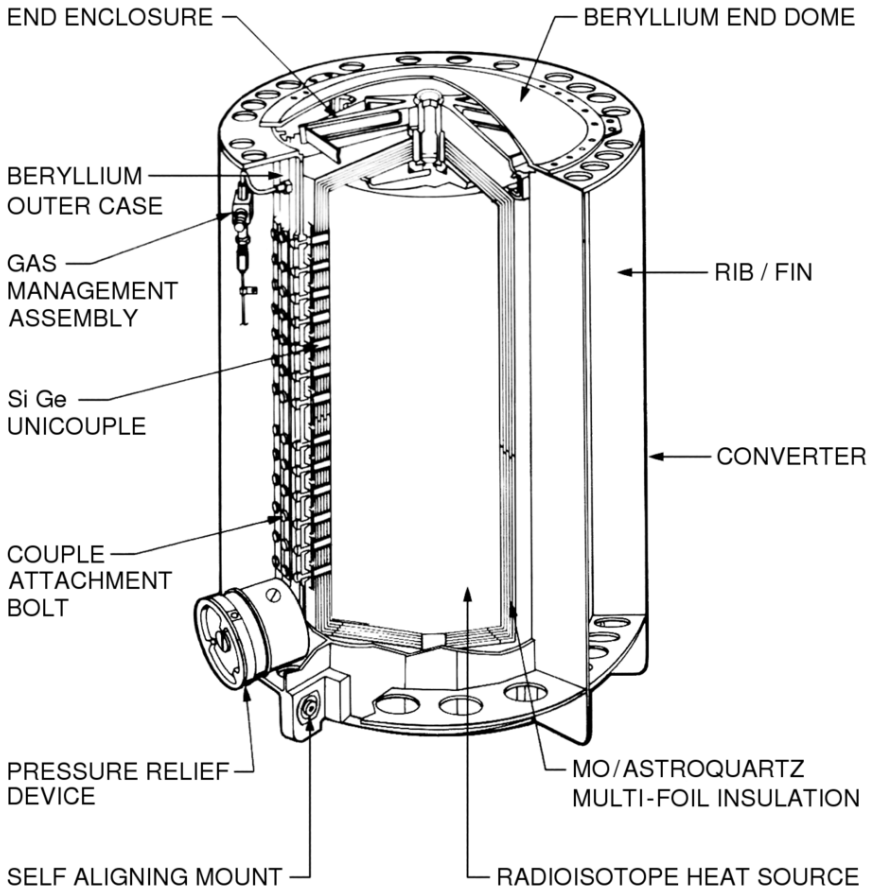

Figure 6. MHW-RTG configuration.

Table 14. Top-level MHW-RTG characteristics.

Parameter	MHW-RTG Value	
Power [BOM/EODL] (vacuum)	157 W_e [BOM]	125 W_e [EODL]
System mass	37.7 kg	
Specific power [BOM/EODL] (vacuum)	4.2 W_e/kg [BOM]	3.3 W_e/kg [EODL]
Conversion efficiency (vacuum)	6.5% (BOM)	5.9% [EODL]
Power degradation rate	1.6% per year	
No. GPHS modules	18	
Pu-238 mass	4.5 kg	
Operating environments	Vacuum	
System lifetime	14+ years (demonstrated 38 years to date on Voyager)	

5.1.2 Power Conversion Technology

The convertor housing consisted of a beryllium outer shell and pressure domes. The MHW-RTG was shaped as a right circular cylinder, and contained 24 3.7-cm diameter plutonium dioxide fuel

containers. Each fuel container produced 100 W_t, and had a metallic iridium shell containing the fuel and a graphite impact shell.

The power convertor contained 312 silicon-germanium unicouples attached directly to the outer shell, arranged in 24 circumferential rows with each row containing 13 couples. These generated electric power via the Seebeck effect described in Section 2.1.3. With a silicon nitride coating, silicon-germanium does not sublimate significantly, and this allowed operation without a cover gas in the vacuum of space.

5.1.3 Configuration

The MHW-RTG had a fin tip-to-tip diameter of 0.40 m, a length of 0.58 m, and a total system mass of 37.7 kg for the units built for Voyager. The outer shell of the MHW-RTG was beryllium with six radial fins.

5.1.4 System Considerations

5.1.4.1 Nominal Operations

The MHW-RTG was designed for nominal operations in deep space in vacuum at 4 K (–269°C) without solar flux, though it proved to be adaptable to a wide latitude of operating temperatures and lighting conditions, as was demonstrated by the wide range of operating environments of the MHW-RTG in the Grand Tour completed by Voyager 2. The external temperature of the MHW-RTG housing was less than 573 K (300°C). Table 15 shows the MHW-RTG's nominal operating characteristics.

Table 15. Nominal MHW-RTG operating characteristics.

Parameter	MHW-RTG Value		Comments
Heat Rejection Requirement	2243 W_t [BOM]	1840 W_t [EODL]	
Thermoelectric converter cold side temperature	573 K (300°C) [BOM]		
Thermoelectric converter hot side temperature	1273 K (1000°C) [BOM]		

5.1.4.2 Thermal Compliance

2243 W_t of the 2,400 W_t produced by the fuel containers at BOM had to be rejected from the MHW-RTG unit by radiation from the outer housing and fins. If needed, this waste heat could be routed to other parts of the spacecraft to warm spacecraft components.

5.1.4.3 Mechanical Compliance

The MHW-RTG did not contribute to a spacecraft's vibration environment because it used solid-state conversion technology with no moving parts. The MHW-RTG was launched successfully on Titan III launch vehicles.

5.1.4.4 Fault Modes

The thermocouple converter units in the MHW-RTG were cross-strapped in a two-string, series-parallel wiring configuration so current could continue to flow even if a single couple was lost or damaged. This design was robust to the failure of a single couple in each pair, i.e., failure of one couple would result in the loss of the power from that couple only.

5.1.5 Schedule

The MHW-RTG was a TRL 9 technology. To date, it has flown on four missions that are compared in Table 16. The MHW-RTG program is no longer active, and was replaced with the GPHS-RTG.

Table 16. MHW-RTG missions.

Mission	*Voyager 1*	*Voyager 2*	*Lincoln Experimental Satellite 8*	*Lincoln Experimental Satellite 9*
Launch date	September 5, 1977	August 20, 1977	March 14, 1978	March 14, 1978
End of mission	Continuing	Continuing	2004	Continuing
Number of MHW-RTGs	3	3	2	2
BOM power	474 W_e	474 W_e	308 W_e	308 W_e

5.1.6 Bibliography

Schmidt, G. R., Sutliff, T. J., and Dudzinski, L. A., "Radioisotope Power: A Key Technology for Deep Space Exploration," *Radioisotopes – Applications in Physical Sciences*, N. Singh, editor, *InTech*, ISBN: 978-953-307-510-5, Chapter 20, pp. 419–456, 2011.

5.2 General Purpose Heat Source Radioisotope Thermoelectric Generator (GPHS-RTG)

5.2.1 Introduction

The General Purpose Heat Source Radioisotope Thermoelectric Generator (GPHS-RTG) represents the first standardized RTG design, using GPHS modules to encase the fuel. It has a record of four successful space missions and produces nearly 300 W_e at beginning of life. The GPHS-RTG has been replaced by the MMRTG. Unlike the MMRTG, the GPHS-RTG was developed to operate only in vacuum. Figure 7 illustrates the GPHS-RTG's geometry. Table 17 gives its performance characteristics.

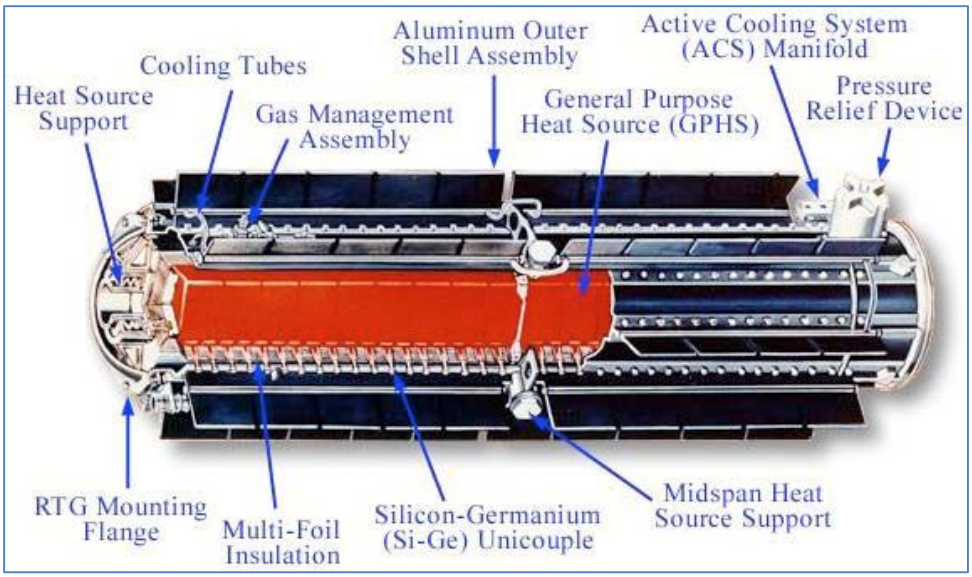

Figure 7. GPHS-RTG configuration.

Table 17. Top-level GPHS-RTG characteristics.

Parameter	GPHS-RTG Value	
Power [BOM/EODL] (vacuum)	285 W_e [BOM]	227 W_e [EODL]
System mass	56.0 and 57.8 kg for Step 0, 1, respectively	
Specific power [BOM/EODL] (vacuum)	5.1 W_e/kg [BOM]	4.1 W_e/kg [EODL]
Conversion efficiency (vacuum)	6.3% (BOM)	5.6% [EODL]
Power degradation rate	1.6% per year	
No. GPHS modules	18	
Pu-238 mass	7.6 kg	
Operating environments	Vacuum	
System Lifetime	14+ years	
GPHS-RTGs used Step 0 GPHS modules of mass 1.43 kg each, with the exception of New Horizons' F-8 unit that uses Step 1 GPHS modules of 1.51 kg each.		

5.2.2 Power Conversion Technology

The GPHS-RTG consisted of three main subsystems – the GPHS assembly, the converter assembly, and the converter housing. The GPHS assembly consisted of 18-GPHS modules, each of which contained four plutonium dioxide fuel clads. The natural decay of the Pu-238 in the fuel provided heat to the converter assembly surrounding the GPHS assembly. The converter assembly contained 572 silicon-germanium thermoelectric unicouples that generated electric power via the Seebeck effect described in Section 2.1.3. As shown in Figure 8, each unicouple was attached to a silicon-molybdenum alloy hot shoe on one end, and a stack of tungsten, copper, molybdenum, stainless steel, and alumina components forming the cold end on the other. The N-leg of each Si-Ge unicouple and the corresponding attached Si-Mo hot shoe segment were doped with phosphorus; the P-leg was doped with boron. Copper contacts were used for the electrical connection.

The unicouples were cantilevered inward from the outer housing of the GPHS-RTG and wired in a dual-string, series-parallel configuration, as discussed under "Fault Modes" below. Molybdenum foil and Astroquartz cloth composed the multifoil insulation assembly that insulated the thermal components.

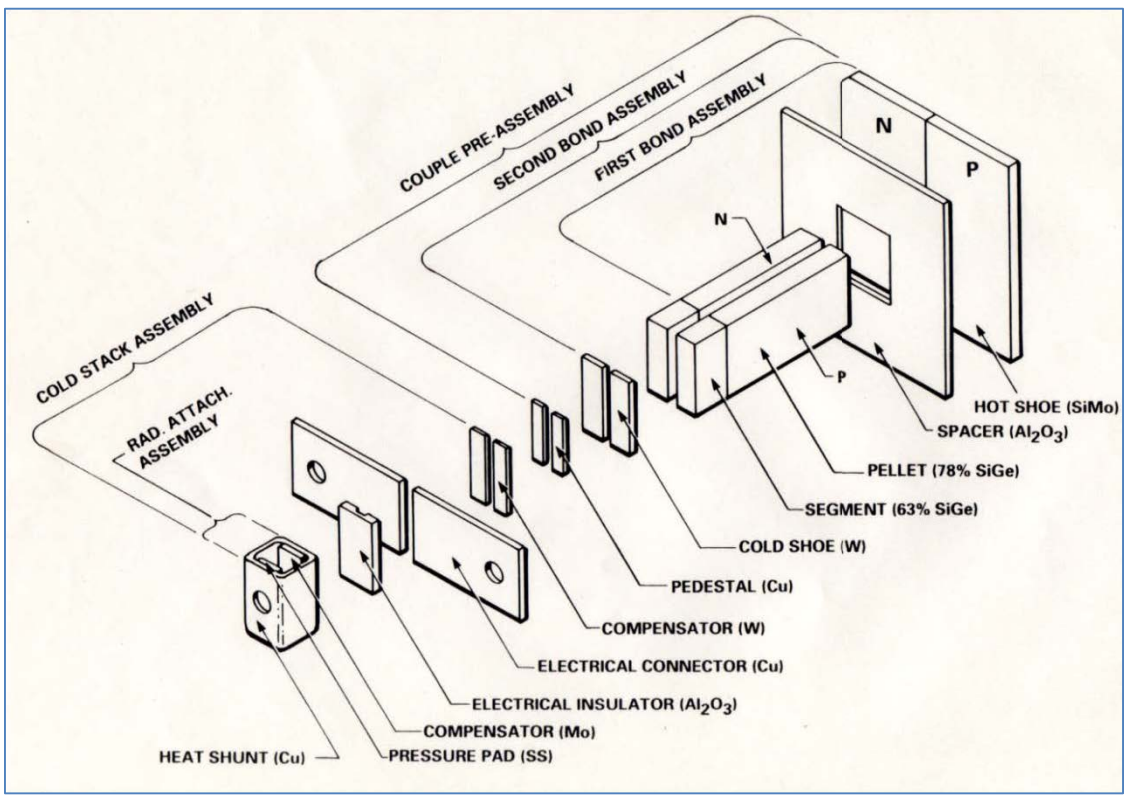

Figure 8. Exploded view of Si-Ge unicouple used in the GPHS-RTG.

The hot-end temperature of the GPHS-RTG was approximately 1,273 K (1000°C) at BOM, and the cold-end temperature was approximately 566 K (293°C). The specific power of the GPHS-RTG was the highest for any of the RTGs that have been flown at 5.1 W_e/kg, converting 4,500 W of thermal energy from the GPHS assembly to 296 W_e (Cassini BOM value). The GPHS-RTG had a system efficiency of 6.3%. The specific power of the GPHS-RTG was higher than the

more recent MMRTG and ASRG designs, as the original design of the GPHS modules used at the time were lower mass than the current Step 2 GPHS design, and the addition of thermal insulation to operate in atmosphere also added mass to the MMRTG and ASRG.

The driving factor for power conversion efficiency was the temperature differential between the hot end of the converters, determined by the temperature of the GPHS module, and the cold end, determined by the external operating temperature. The GPHS-RTG was designed for operation only in vacuum.

The power output of the GPHS-RTG decayed over time due to the decay of the fuel, as well as degradation of the thermocouples. The power degradation for the GPHS-RTG was approximately 1.6% per year, including the 0.8% per year decay rate for the GPHS module, and the 0.8% per year decrease in power due to the thermocouple degradation. Figure 9 shows the nominal power output over the 14-year lifetime of a GPHS-RTG.

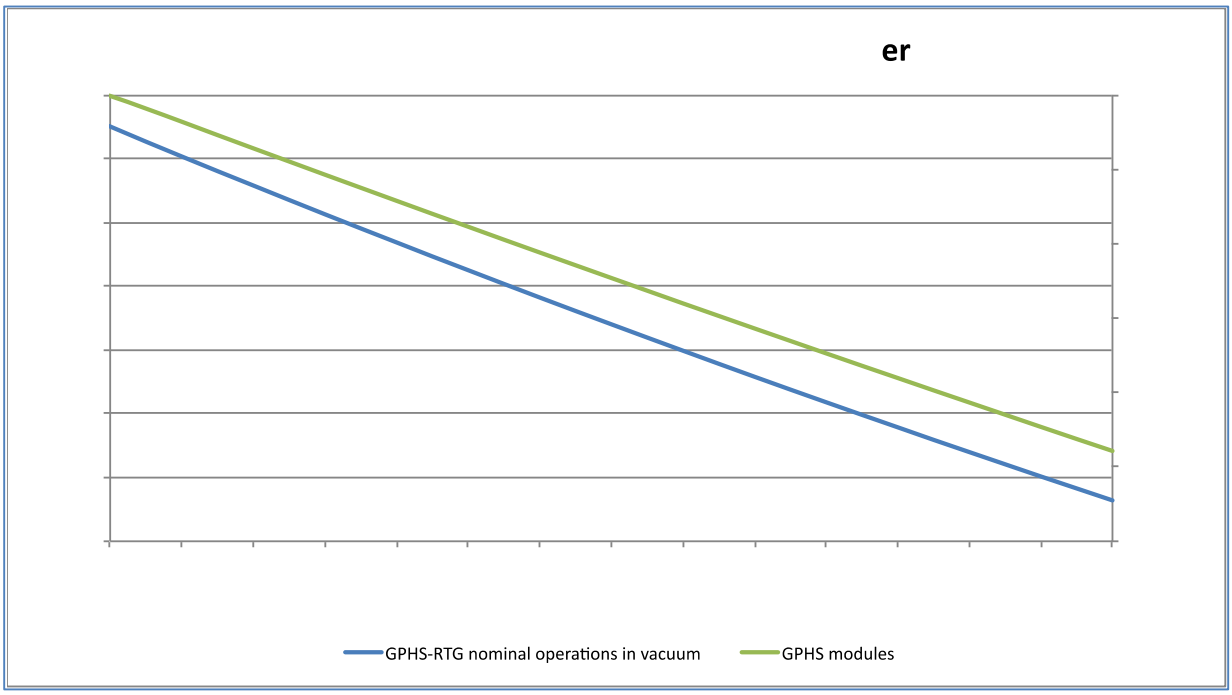

Figure 9. Change in nominal GPHS-RTG output power and total GPHS module input power over lifetime.

5.2.3 Configuration

The GPHS-RTG had an overall diameter of 0.422 m, a length of 1.14 m, and a total system mass of 56.0 and 57.8 kg for Step 0 and Step 1, respectively. The outer shell of the GPHS-RTG was aluminum alloy with eight radial fins and a midspan structural support. Optional cooling loops could be attached to the base of each radial fin for active cooling. The outer housing had four mounting bolts on one end for attachment to the spacecraft.

A breakdown of the masses of the component subsystems is shown in Table 18. Figure 7 shows the configuration of the GPHS-RTG unit.

Table 18. GPHS-RTG subsystems and mass breakdown.

MMRTG Subsystem	Mass [kg]
GPHS modules (18 Step 0 GPHSs)	25.7
Heat source support	4.7
Thermal insulation	6.4
Power converters and electrical controls	6.2
Housing and fins	13
Total system mass	**56**

5.2.4 System Considerations

5.2.4.1 Nominal Operations

The GPHS-RTG was designed for nominal operations in deep space in vacuum at 4 K (–269°C) without solar flux, though it could operate in a wide latitude of operating temperatures and lighting conditions, as was demonstrated by the operating environments of the GPHS-RTG in deep space, flyby environments of the inner planets, and tours of gas giants. In addition to producing electric power, the GPHS-RTG had other direct effects on its environment, such as producing external magnetic fields, neutron and gamma radiation, and thermal radiation from the outer housing and fins. The magnetic interference produced by the unit was 74–80 nT at 1 m from the center of the RTG. The neutron dose rate from the GPHS-RTG was between 20 and 50 mrem, and the gamma dose rate was between 5 mrem/h to 10 mrem/h at 1 m from center of the RTG. The external temperature of the GPHS-RTG housing was less than 533 K (260°C). Table 19 shows the GPHS-RTG's nominal operating characteristics.

Table 19. Nominal GPHS-RTG operating characteristics.

Parameter	GPHS-RTG value		Comments
Heat rejection requirement	4215 W_t [BOM]	3794 W_t [EODL]	Assumes 250W_t per GPHS module
Thermoelectric converter cold side temperature	566 K (293°C) [BOM]		
Thermoelectric converter hot side temperature	1273 K 1000°C) [BOM]		
G-loading limit	40 g		
Acoustic loading limit	<0.3 g^2/Hz peak		

Prior to integration, the GPHS-RTG was usually stored with an inert cover gas, typically argon, to minimize the degradation of the thermocouples. The argon was replaced with xenon to achieve higher temperature differential shortly before integration with the spacecraft. This inert gas was ultimately vented to space after launch.

The GPHS-RTG used the original GPHS modules. Since then, DOE has gone through two iterations of the module design, making enhancements for safety in case of mission failure, with a corresponding increase in mass of each unit from 1.43 kg to 1.61 kg. If a GPHS-RTG were to

be built using the new enhanced GPHS modules with higher mass, the specific power is estimated to be approximately 4.8 W_e/kg.

5.2.4.2 Thermal Compliance

4,215 W_t of the 4,500 W_t produced by the GPHS modules at BOM must be rejected from the GPHS-RTG unit by radiation from the outer housing and fins, or actively removed through cooling loops that can be attached at the base of the fins. If needed, this waste heat could be routed to other parts of the spacecraft to warm spacecraft components.

5.2.4.3 Mechanical Compliance

The GPHS-RTG did not contribute to a spacecraft's vibration environment because it used solid-state conversion technology with no moving parts. One end of the unit attached to the spacecraft using four bolts that engaged the outer housing's four main structural supports. The maximum landing load that the GPHS-RTG could tolerate was 40g. The GPHS-RTG was specifically tested for the Titan IV launch vehicle with Centaur upper stage (Cassini) and the Atlas V 551 (New Horizons) launch environments.

5.2.4.4 Fault Modes

The thermocouple converter units in the GPHS-RTG were cross-strapped in a two-string, series-parallel wiring configuration so current could continue to flow even if a single couple was lost or damaged. This design was robust to the failure of a single couple in each pair, i.e., failure of one couple would result in the loss of the power from that couple only.

5.2.5 Schedule

The GPHS-RTG was a TRL 9 technology. To date, it has flown on the four NASA missions compared in Table 20. The GPHS-RTG program is no longer active, and has been replaced with the MMRTG.

Table 20. GPHS-RTG missions.

Mission	*Galileo*	*Ulysses*	*Cassini*	*New Horizons**
Launch date	October 18, 1989	October 6, 1990	October 15, 1997	January 19, 2006
End of mission	December 1997	June 2009	Continuing	Continuing
Number of GPHS-RTGs	2	1	3	1
BOM power	289 W_e	284 W_e	296 W_e	245.7 W_e *
* >70% of the fuel in the New Horizons F-8 GPHS-RTG flight unit is 21-year-old fuel from the Cassini flight spare RTG, resulting in the relatively lower BOM power.				

5.2.6 References and Bibliography

Balint, T. S. and Jordan, J. F., "RPS Strategies to Enable NASA's Next Decade Robotic Mars Missions." *Acta Astronautica*, Vol. 60. pp. 992-1001. 2006.

Bennet, G. L., Lombardo, J. J., Hemler, R. J., Silverman, G., Whitmore, C., Amos, Wayne, R., Johnson, E., Schock, A., Zocher, R. W., Keenan, T. K., Hagan, J. C., and Englehart, R. W., "Mission of Daring: The General-Purpose Heat Source Radioisotope Thermoelectric Generator," 4th AIAA International Energy Conversion Engineering Conference and Exhibit (IECEC). San Diego, CA, June 2006.

Bennet, G.L., “Space Nuclear Power: Opening the Final Frontier,” 4th AIAA International Energy Conversion Engineering Conference and Exhibit (IECEC), San Diego, CA, June 2006.

Lange, R. G., and Carroll, W. P., “Review of Recent Advances of Radioisotope Power Systems,” *Energy Conversion and Management*, Vol. 49. pp. 393–401. March 2008.

Mason, L. S., “Realistic Specific Power Expectations for Advanced Radioisotope Power Systems,” 4th AIAA International Energy Conversion Engineering Conference and Exhibit (IECEC), San Diego, CA, June 2006.

Radioisotope Power Systems Committee, Space Studies Board, and Space Engineering Board, Department of Energy. *Radioisotope Power Systems: An Imperative for Maintaining U.S. Leadership in Space Exploration*,” The National Academies Press. Washington, D.C., 2009.

Schmidt, G. R., Sutliff, T. J., and Dudzinski, L. A., “Radioisotope Power: A Key Technology for Deep Space Exploration,” *Radioisotopes – Applications in Physical Sciences*, N. Singh, editor, *InTech*, ISBN: 978-953-307-510-5, Chapter 20, pp. 419–456, 2011.

6 Appendix B – Potential Future Systems – Low Power

6.1 RHU-based Radioisotope Thermoelectric Generator (RHU-based RTG)

6.1.1 Introduction

The RHU-based Radioisotope Thermal Generator (RHU-based RTG) is a conceptual RTG that could generate between 40 and 160 mW_e, and would be appropriate for long-lived missions with extremely low power needs. A general RHU-based RTG conceptual design includes one or more Radioisotope Heater Units (RHUs), and high-heritage thermoelectric (TE) components. RHU-based RTGs would require very little plutonium dioxide fuel and could leverage existing thermoelectric energy conversion technology. Currently, RHU-based RTGs are not part of an active development project; given a potential mission need, the next step would be to transfer the needed technology to DOE system contractors.

A number of different RHU-based RTG concepts have been studied in the past two decades. The 2004 report Enabling Exploration with Small Radioisotope Power Systems suggests a number of missions for which the RHU-based RTG could be enabling, such as hard landers, micro-rovers, and deployable payloads to perform long-duration seismology or other network science. Due to its compact design and simple configuration, an RHU-based RTG could potentially be designed to handle much higher landing loads of the order of 10,000 g. This would be a key enabling feature for hard-landing systems.

Figure 10 shows an example RHU-based RTG concept developed by Hi-Z between 1998 and 2007. Table 21 gives specific project performance parameters.

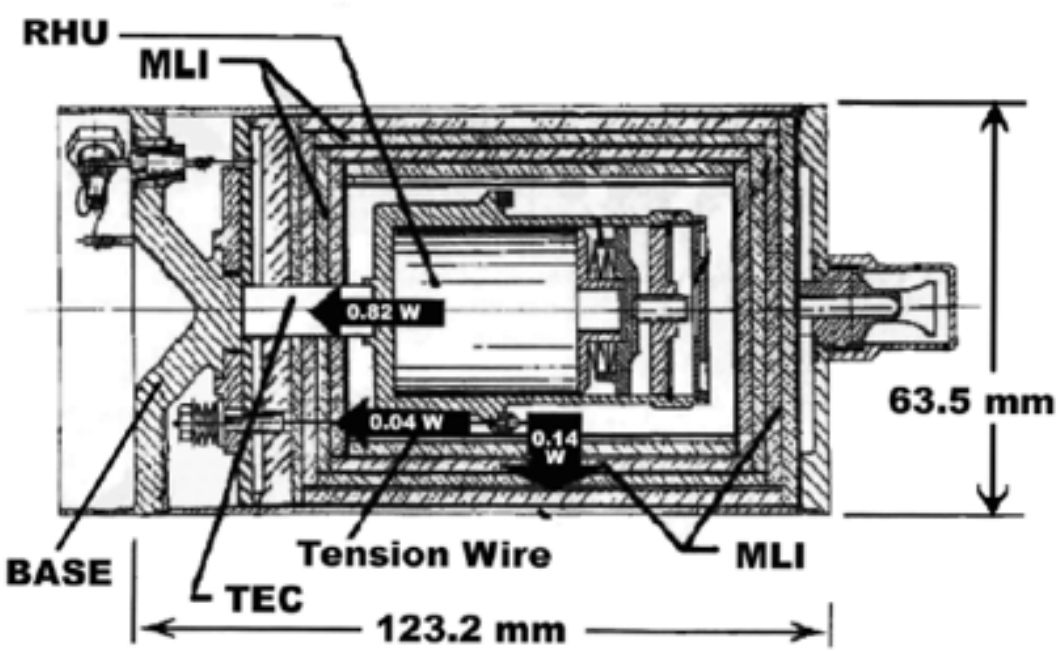

Figure 10. Conceptual Hi-Z 40 mW_e RHU-based RTG.

Table 21. Conceptual Hi-Z 40 mW_e RHU-based RTG performance characteristics.

Parameter	Hi-Z RHU-based RTG Value	
Power [BOM/EODL] (vacuum)	0.04 W_e [BOM]	0.03 W_e [EODL]
Power [BOM/EODL] (Mars atmosphere)	TBR	
System mass	0.33 kg	
Specific power [BOM/EODL] (vacuum)	0.12 W_e/kg [BOM]	0.1 W_e/kg [EODL]
Conversion efficiency (vacuum)	4.0% [BOM]	3.4% [EODL]
Power degradation rate (vacuum)	1.6%/year	
No. RHUs	1	
Pu-238 mass	0.002 kg	
Operating environments	Vacuum, Mars atmosphere	
System Lifetime	TBR (likely 14 years)	

6.1.2 Power Conversion Technology

Like all other RTG family products, the RHU-based RTG would use the Seebeck effect power conversion technology described in Section 2.1.3. The RHU-based RTG would include three main subsystems: the RHU, the thermoelectric convertor, and the housing.

One conceptual RHU-based RTG design would use a circuit of 676 small bismuth telluride (Bi_2Te_3) elements arranged in a multiple redundant circuit. Bismuth telluride is a high-heritage thermoelectric material, suitable for use at temperatures that are comparatively lower than other RTGs. The system would operate at ~4% efficiency, generating ~40 mW_e of power at BOM from the 1 W_t of thermal power from a single RHU. Larger RHU-based RTGs could contain multiple RHUs or multiple fuel pellets, producing up to ~160 mW_e from 4 RHUs.

6.1.3 Notional Configuration

The RHU-based RTG shown in Figure 10 would be 0.06 m in diameter and 0.12 m in height. A system based on four RHUs would be 0.10 m in diameter and 0.19 m in height if the RHUs were stacked, or 0.12 m in diameter and 0.10 m in height if the RHUs were arranged side-by-side.

The RHU-based RTG would consist of three different subsystems: the RHU(s), the thermoelectric convertor, and the housing. The RHUs could be ~40 g each, and would each contain a single pellet of plutonium dioxide fuel. The thermoelectric convertor would be a thermopile connecting the hot end of the RHU to the cold base of the unit. The housing would provide structure and thermally isolate the RHU in a vacuum, to direct the majority (~75–80%) of the heat through the thermoelectric convertor.

6.1.4 System Considerations

6.1.4.1 Nominal Operations

Table 22 shows the nominal operations performance characteristics and requirements of an RHU-based RTG.

Table 22. Nominal conceptual RHU-based RTG operation characteristics, assuming operation in atmosphere.

Parameter	RHU-based RTG value		Comments
Heat rejection requirement	0.96 W_t	0.85 W_t	Based on 1 W_t per RHU
Cold side temperature	323 K (50°C) [BOM]		At cold side of TE convertors
Hot side temperature	523 K (250°C) [BOM]		At hot side of TE convertors
G-loading limit	10,000 g		Tentative
Acoustic loading limit	TBR		

6.1.4.2 Fault Modes

The RHU-based RTG concept would use a vacuum or an argon cover gas to thermally isolate the RHU; if this chamber was breached, it would impact power generation. Possible RHU-based RTG use cases include hard landers and impactors, which could stress the landing loads requirement. The likelihood of these failure modes would need to be investigated.

6.1.5 Schedule

RHU-based RTGs are generally at TRL ~4. There is currently funding in the form of a Phase I Small Business Innovation Research (SBIR) for Hi-Z to design a ~40 mW_e RHU-based RPS similar to the one already built and tested (including engineering models, drop testing, and > 100,000 hours life demonstrated) by the company in 1998–2007. There is currently no RHU-based RTG flight project, so the development schedule of this RTG is currently uncertain. As most of the designs studied use heritage components and thermoelectrics, it is expected that the systems engineering work required to develop this technology could take 5–6 years.

6.1.6 References and Bibliography

Abelson, R. D., Balint, T. S., Marshall, K. E., Noravian, H., Randolph, J. E., Satter, C. M., Schmidt, G. R., and Shirley, J. H., *Enabling Exploration with Small Radioisotope Power Systems*, JPL Pub 04-10, Jet Propulsion Laboratory, California Institute of Technology, Pasadena, CA. 2004.

Leavitt, F. A., Nesmith, B. N., Bass, J. B., and Brown, C., "A History, the Development and Potential Mission Uses for a 40mW Radioisotope Power System," Nuclear and Emerging Technologies for Space (NETS-2015), Albuquerque, NM, Feb. 2015.

Snyder, G. J., Borshchevsky, A. et al., "Testing Milliwatt Power Source Components," Space Technology and Applications International Forum; Albuquerque, NM, March 2002.

6.2 Small Radioisotope Thermoelectric Generator (Small RTG)

6.2.1 Introduction

The Small Radioisotope Thermoelectric Generator (Small RTG) is a conceptual RTG (currently TRL ~3) that would generate between 10 and 60 W_e and would be appropriate for low-power, long-lived mission applications. The Small RTG conceptual design includes one to three GPHS modules, and either thermoelectric (TE) components similar to those of current RTGs or advanced thermoelectrics for higher efficiency. Currently, it is not part of an active development project, but given that Small RTGs require less radioisotope fuel than the smallest of current RTG units and could leverage existing thermoelectric energy conversion technology, development to TRL 6 or higher appears to be feasible in the near term.

A number of different small-RTG concepts have been studied, using different TE materials or configurations based on the context of each mission concept. The 2004 report, *Enabling Exploration with Small Radioisotope Power Systems*, suggested a number of mission concepts for which the Small RTG would be enabling, such as long-lived seismological landers on planetary surfaces, surface mobility systems, subsurface probes, and deep space micro-spacecraft. Due to the anticipated structural stability of a single GPHS unit compared to a stack of GPHS modules, a Small RTG could potentially handle much higher landing loads of the order of 5,000 g. This could be a key enabling feature for hard-landing systems.

Figure 11 shows an example design using a single GPHS module for a Mars rover mission. This design concept is based on components with flight heritage, including a GPHS module and PbTe-TAGS multicouples. Table 23 gives specific projected performance parameters.

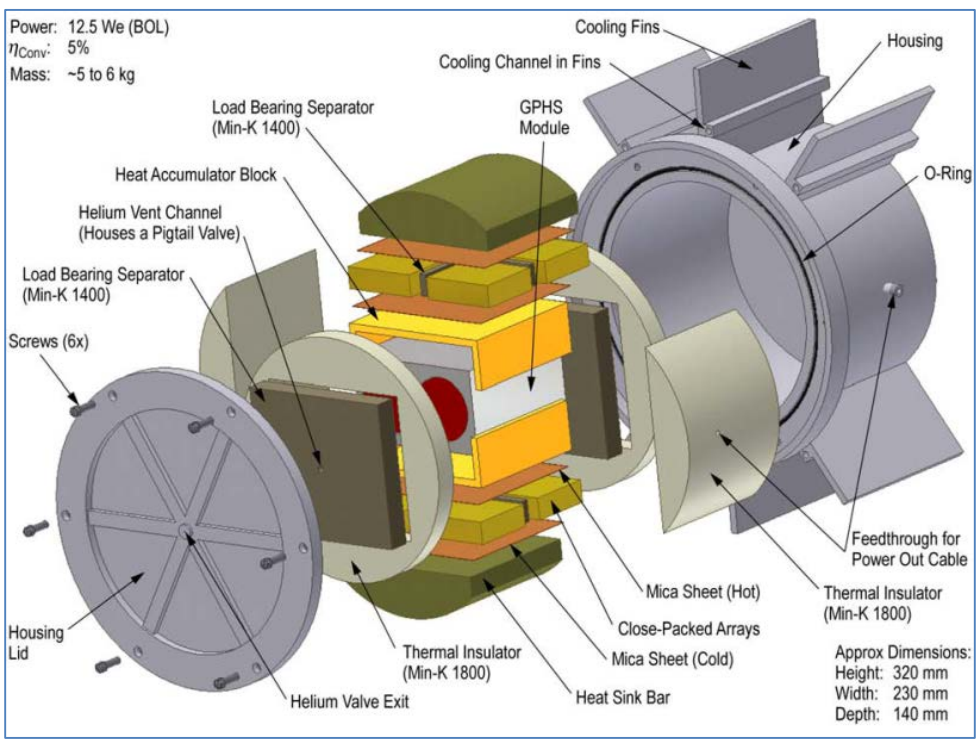

Figure 11. Conceptual non-spring loaded Small RTG for a Mars rover mission.

Table 23. Top-level parameters for a conceptual Small RTG using heritage thermoelectrics.

Parameter	Small RTG Value (Heritage TE Technology)	
Power [BOM/EODL] (vacuum)	12.5 W_e [BOM]	10.0 W_e [EODL]
Power [BOM/EODL] (Mars atmosphere)	TBR	
System mass	~ 6 kg	
Specific power [BOM/EODL] (vacuum)	2.1 W_e/kg [BOM]	1.7 W_e/kg [EODL]
Conversion efficiency (vacuum)	5.0% [BOM]	4.6% [EODL]
Power degradation rate (vacuum)	1.6%/year	
No. GPHS modules	1	
Pu-238 mass	0.44 kg	
Operating environments	Vacuum, Mars atmosphere	
System Lifetime	TBR (likely 14 years)	

The Advanced Thermoelectric Convertor (ATEC) project is currently researching advanced thermoelectrics that could yield much higher conversion efficiencies from the Small RTG. Materials such as PbTe-TAGS/BiTe and Skutterudite-based unicouples could provide efficiencies approaching 9%. Figure 12 shows a representative diagram of the cross-section of a 1-GPHS Small RTG using the advanced segmented PbTe-TAGS/BiTe materials in an MMRTG-type thermoelectric configuration. Table 24 gives projected characteristics and performance parameters for such a Small RTG, while Table 25 gives parameters for a 3-GPHS Small RTG.

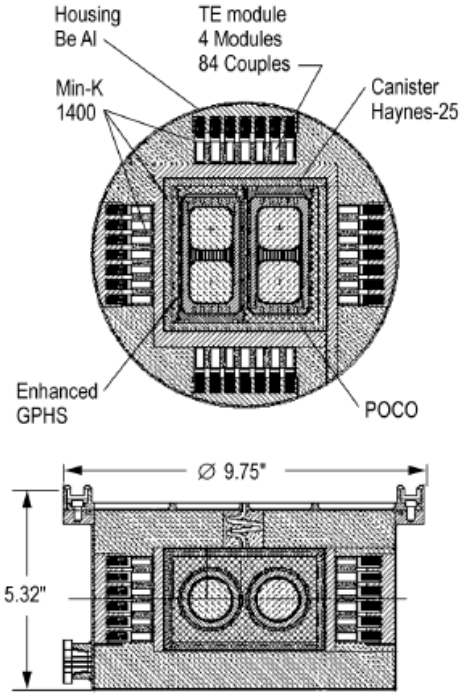

Figure 12. GPHS-based Small RTG concept with MMRTG-type spring-loaded thermoelectrics.

Table 24. Top-level conceptual 1-GPHS Small RTG performance characteristics using advanced thermoelectrics.

Parameter	1-GPHS Small RTG Value (Advanced TE Technology)	
Power [BOM/EODL] (vacuum)	21W_e [BOM]	16 W_e [EODL]
Power [BOM/EODL] (Mars atmosphere)	TBR	
System mass	10 kg	
Specific power [BOM/EODL] (vacuum)	2.1 W_e/kg [BOM]	1.6 W_e/kg [EODL]
Conversion efficiency (vacuum)	8.4% [BOM]	7.3% [EODL]
Power degradation rate (vacuum)	2.5%/year	
No. GPHS modules	1	
Pu-238 mass	0.44 kg	
Operating environments	Vacuum, Mars atmosphere	
System lifetime	TBR (likely 14 years)	

Table 25. Top-level conceptual 3-GPHS Small RTG performance characteristics using advanced thermoelectrics.

Parameter	3-GPHS Small RTG Value (Advanced TE Technology)	
Power [BOM/EODL] (vacuum)	64 W_e [BOM]	48 W_e [EODL]
Power [BOM/EODL] (Mars atmosphere)	TBR	
System mass	20 kg	
Specific power [BOM/EODL] (vacuum)	3.2 W_e/kg [BOM]	2.4 W_e/kg [EODL]
Conversion efficiency (vacuum)	8.5% [BOM]	7.3% [EODL]
Power degradation rate (vacuum)	2.5%/year	
No. GPHS modules	1	
Pu-238 mass	0.44 kg	
Operating environments	Vacuum, Mars atmosphere	
System lifetime	TBR (likely 14 years)	

6.2.2 Power Conversion Technology

Like all other RTG family products, the Small RTG would use the Seebeck effect power conversion technology described in Section 2.1.3. The Small RTG would include three main subsystems: the GPHS module(s), the convertor assembly, and the convertor housing.

The MMRTG-like configuration Small RTG shown in Figure 12 would have 84 couples surrounding the GPHS module, and would produce ~21 W_e. Depending on the thermoelectric materials used and their configuration, the output power for a 1-GPHS Small RTG could range from ~12 W_e to ~21 W_e at BOM.

6.2.3 Configuration

The notional Small RTG shown in Figure 12 would be 0.24 m in diameter and 0.14 m in height, not including radiating fins. If configured like a shorter MMRTG, the system would be 0.64 m in

diameter including fins, and the 1-GPHS Small RTG would be 0.17 m in height, while the 3-GPHS Small RTG would be 0.34 m in height.

Regardless of the unicouple technology, a small RTG would consist of three different subsystems: the GPHS block, the convertor assembly, and the convertor housing. The single GPHS block would be a Step 2 GPHS module. The convertor assembly may vary depending if it is of MMRTG or ATEC-heritage, but both would contain the thermocouples for direct thermoelectric conversion. The convertor housing would provide structure support for the RTG as well as the conductive path between the thermocouples and the environment.

6.2.4 System Considerations

6.2.4.1 Nominal Operations

Table 26 shows the projected nominal operational performance characteristics and requirements of the Small RTG.

Table 26. Nominal conceptual 1-GPHS Small RTG operation characteristics, assuming advanced TE technology in vacuum.

Parameter	Small RTG Value		Comments
Heat rejection requirement	229 W_t	203 W_t	Based on 250 W_t per GPHS module
Cold-side temperature	323 K (250°C) [BOM]		At cold side of TE convertors
Hot-side temperature	697 K (424°C) [EODL]		At hot side of TE convertors
G-loading limit	< 5,000 g		Tentative
Acoustic loading limit	TBR		

6.2.4.2 Thermal Compliance

230 W_t of the 250 W_t produced by the GPHS module at the BOM would need to be rejected from the Small RTG unit by radiation or convection through the outer housing and fins. Other cooling options may be possible, such as cooling loops, whose configuration is still under investigation.

6.2.4.3 Mechanical Compliance

As the Small RTG would use passive, solid-state conversion technology, it would not contribute to the vibration environment through any moving parts. The Small RTG may be able to handle large landing loads, but this has not been studied in depth and may require significant development.

6.2.4.4 Fault Modes

The thermocouple convertor units in the MMRTG-like Small RTG would be cross-strapped in a dual-string, series-parallel wiring configuration so current can continue to flow even if a single couple is lost or damaged. This design would be robust to failure of a single couple in each pair, i.e., failure of one couple would result in the loss of power from only that couple.

6.2.5 Schedule

Small RTGs are at TRL ~2–3. To date only early conceptual design work has been completed to establish feasibility. There is no active Small RTG project, so the development schedule of this

RTG is currently uncertain. As most of the designs studied use heritage components or advanced thermoelectrics that are currently being developed in a separate materials program, it is expected that the systems engineering work to develop this technology could take 5–6 years.

6.2.6 Bibliography

Abelson, R. D., Balint, T. S., Marshall, K. E., Noravian, H., Randolph, J. E., Satter, C. M., Schmidt, G. R., and Shirley, J. H., *Enabling Exploration with Small Radioisotope Power Systems*. JPL Pub 04-10, Jet Propulsion Laboratory, California Institute of Technology, Pasadena, CA, 2004.

6.3 Small Stirling Radioisotope Generator (Small SRG)

6.3.1 Introduction

The Small Stirling Radioisotope Generator (Small SRG) represents a possible future configuration within the Stirling Radioisotope Generator (SRG) family. This design could be thought of in its most basic form as ½ of an ASRG (in effect, a single convertor/single GPHS module). Additionally, the Small SRG design concept includes a new controller architecture, with modifications to enable operations on the lunar surface and a dynamic balancer to reduce the shaking force generated by single convertor operation. The Small SRG concept is currently under test at NASA GRC.

6.3.2 Power Conversion Technology

The Small SRG would use the Stirling cycle described in Section 2.2.3. The conversion efficiency of the Small SRG would depend largely on the temperature difference between the hot and cold ends of the converter. At nominal vacuum conditions, defined as a 4 K (–269°sink temperature and a GPHS thermal output of 250 W_t, the Small SRG would produce 59 W_e at the beginning of life (BOL) and would degrade at a rate of 1.16% per year, reaching a final end of design life (EODL) output of 48 W_e. Under nominal Mars atmosphere conditions, defined as a 200 K (–73°C) sink temperature, the conversion efficiency would be reduced, yielding roughly 49 W_e BOL and 40 W_e EODL.

Table 27 tabulates the projected performance parameters at nominal vacuum and atmosphere operations, notably the output power, specific power, and conversion efficiency at BOL and EODL.

Table 27. Conceptual Small SRG operational characteristics.

Parameter	Small SRG Value	
Power [BOL/EODL] (vacuum)	59 W_e (BOL)	48 W_e (EODL)
Power [BOL/EODL] (Mars atmosphere)	49 W_e (BOL)	40 W_e (EODL])
GPHS thermal output	250 W_t (BOL)	219 W_t (EODL)
System mass	17.5 kg	
Specific power [BOL/EODL] (vacuum)	3.4 W_e/kg [BOL]	2.7 W_e/kg [EODL]
Specific power [BOL/EODL] (Mars atmosphere)	2.8 W_e/kg [BOL]	2.3 W_e/kg [EODL]
Conversion efficiency (vacuum)	24 % [BOL]	22 % [EODL]
Conversion efficiency (Mars atmosphere)	20 % [BOL]	18 % [EODL]
Power degradation rate (vacuum)	1.16 %/year	
Power degradation rate (Mars atmosphere)	1.16 %/year	
No. GPHS modules	1	
Pu-238 mass	0.44 kg	
Operating environments	Vacuum, Mars atmosphere, Lunar surface	
System lifetime	14 years	

6.3.3 Configuration

Figure 13 shows a notional configuration for the Small SRG – essentially a half-size ASRG with an added vibration balancer. Table 28 shows a list of critical subsystems that would make up the Small SRG. Due to the low TRL, all mass and configuration descriptions are notional.

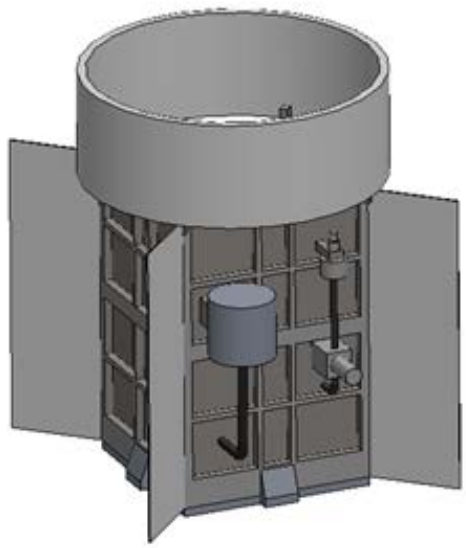

Figure 13. Notional Small SRG configuration.

Table 28. Critical subsystems for the Small SRG concept.

Small SRG Subsystem	Functions
General Housing Assembly	Provide structural support and heat rejection path for the Stirling convertors; provide attachment sites for the shunt, spacecraft mount, and optional cooling loop.
Fins	Provide additional surface area for heat rejection beyond that of the general housing assembly.
Space Vehicle Mounting Interface	Attachment between the Small SRG and spacecraft. Spacecraft interface plate is incorporated in the Small SRG.
Power Shunt	Provides power load if spacecraft bus load is removed (e.g., during spacecraft safing). Attaches to the end of the Small SRG opposite the mounting interface.
Pressure Relief Device	Device that punctures a diaphragm allowing atmospheric air to escape the Small SRG after launch.
Gas Management Valve	Provides gas system access for withdrawing and back filling the Small SRG gas system during storage and ground testing.
GPHS Module	Plutonium-fueled thermal source that provides heat to the hot side of the Stirling convertors. The Small SRG would use 1 GPHS module.
Thermal Insulation	Covers part of the GPHS module to ensure that optimal heat is funneled to the hot side of the power convertor.
Stirling Convertor	Single piston power convertor that converts heat from the GPHS module to piston motion, which generates AC electric power in a linear alternator. The Small SRG uses a single Stirling convertor.
Controller Unit	Controls the phase and performance of the convertors, rectifies the AC power to DC and makes it available to the vehicle, and telemeters Small

Small SRG Subsystem	Functions
	SRG performance data.
Vibration Balancer	Mechanism yet to be designed that would reduce vibration arising from an uncompensated Stirling convertor to levels produced by the ASRG.

6.3.4 System Considerations

The Small SRG is derived from the current ASRG architecture. Since the unit would consist of a single ASC, the Small SRG would be subject to most of the same system constraints and considerations as the ASRG. Residual vibration and thermal accommodation are some of the more important issues arising when considering use of the Small SRG however with the use of the dynamic balancer the vibration levels should be lower than ASRG. Table 29 contains notional Small SRG operating characteristics.

Table 29. Nominal conceptual Small SRG operating characteristics.

Parameter	Small SRG Value		Comments
Radiation tolerance	50 krad (Si) behind 60 mil aluminum shielding		Radiation tolerance driven by controller, assumed to be similar to the ASRG controller
Heat rejection requirement (vacuum)	165 W_t [BOL]	145 W_t [EODL]	Assumes 250W_t per GPHS module at BOL
Heat rejection requirement (Mars atmosphere)	185 W_t [BOL]	165 W_t [EODL]	Assumes 250W_t per GPHS module at BOL
Heat generated by controller	~15 W_t		
Stirling converter cold side temperature	313 K (40°C)		At general housing structure
Stirling converter hot side temperature	1,123 K (950°C)		
RPS vibration	< 2 N @ 102.2 Hz		Predicted vibration of an ASC with dynamic balancer with active feedback.
G-loading limit	TBR		
Acoustic loading limit	TBR		

6.3.4.1 Mechanical Considerations

The ASRG design relied upon opposing phase-synchronized converters to almost entirely cancel the vibration caused by the reciprocating pistons. Since the Small SRG would consist of a single Stirling converter, nulling the vibration from the piston and displacer would be achieved using a balancer. Because of the temperature variations on the lunar surface, a passive balancer is unlikely to be acceptable. The current Small SRG design uses a dynamic balancer similar to that used on the Ramaty High-Energy Spectroscopic Imager (RHESSI) spacecraft cooler. Sunpower has done preliminary work on a dynamic balancer and estimates the mass and power consumption to be 1 kg and 2 W_e, respectively, while reducing net force generated to be less than 2 N at 102 Hz. These are included in the mass and power shown in Table 27.

6.3.4.2 Thermal Considerations

A Small SRG would utilize a single GPHS with a nominal power output of 250 W_t. Approximately 85 W_t would be converted to electricity, where the remaining 165 W_t would be rejected through the housing at BOL. Housing temperatures should at their warmest be around 300 K (27°C) in a 4 K (–269°C) sink.

SRGs would be fueled a maximum of three years prior to launch.

6.3.5 Schedule

Table 30 contains details on a possible Small SRG development schedule. This advanced concept has undergone some conceptual study to determine feasibility. The design has heritage from the ASRG discussed in Section 7.1. The current TRL is assessed at ~3–4.

Table 30. Projected Small SRG project schedule.

Small SRG TRL level	3-4
Current project milestone	Component validated in environment (ASC has been developed and tested as part of the ASRG)
Next project milestone	System model demonstrated in operational environment
Flight System completion date	TBR (2020-2030)

6.3.6 Reference

Abelson, R. D., Balint, T. S., Marshall, K. E., Noravian, H., Randolph, J. E., Satter, C. M., Schmidt, G. R., and Shirley, J. H., *Enabling Exploration with Small Radioisotope Power Systems*, JPL Pub 04-10, Jet Propulsion Laboratory, California Institute of Technology, Pasadena, CA, 2004.

7 Appendix C – Potential Future Systems – Medium Power

7.1 Advanced Stirling Radioisotope Generator (ASRG)

7.1.1 Introduction

The Advanced Stirling Radioisotope Generator (ASRG), the most mature technology in the Stirling Radioisotope Generator (SRG) family of technologies, represented a new technology path for RPS-enabled missions. The SRG family would use Stirling dynamic power conversion devices that can yield high conversion efficiencies. Table 31 gives the projected performance characteristics of the planned ASRG. Figures in Table 31 assume the BOL fuel load of all GPHS modules produces 250 W_t each, for a total of 500 W_t per ASRG unit. Assumed sink temperatures in vacuum and in Mars's atmosphere are 4 K and 200 K (–269°C and –73°C), respectively.

Table 31. Nominal ASRG performance characteristics.

Parameter	ASRG CBE Value (July 2012)	
Power [BOL/EODL] (vacuum)	137 W_e [BOL]	115 W_e [EODL]
Power [BOL/EODL] (Mars atmosphere)	115 W_e [BOL]	103 W_e [EODL]
System mass	31 kg (Source FDR, pp 47, July 2012)	
GPHS thermal output	500 W_t (BOL)	438 W_{tt} (EODL)
Specific power [BOL/EODL] (vacuum)	4.4 W_e/kg [BOL]	3.7 W_e/kg [EODL]
Specific power [BOL/EODL] (Mars atmosphere)	3.7 W_e/kg [BOL]	3.3 W_e/kg [EODL]
Conversion efficiency (vacuum)	27 % [BOL]	26 % [EODL]
Conversion efficiency (Mars atmosphere)	23 % [BOL]	23 % [EODL]
Power degradation rate (vacuum)	1.16%/year	
Power degradation rate (Mars atmosphere)	1.16%/year	
No. GPHS modules	2	
Pu-238 mass	0.88 kg	
Operating environments	Vacuum, Mars atmosphere	
System lifetime	14 years	

The ASRG would consist of four main subsystems: GPHS modules, two ASCs (power convertors), a controller (ASRG Controller Unit or ACU), and the general housing/heat rejection structure. Each converter's piston would be driven by the temperature difference between the hot end of the Stirling convertor and the Stirling rejector. The controller would monitor and adjust the ASRG's operating parameters and direct power flow to the spacecraft.

7.1.2 Power Conversion Technology

The ASRG would operate on the Stirling thermodynamic cycle as described in Section 2.2.3, Stirling Conversion Technology. The efficiency of power conversion would be largely driven by the temperature difference between the hot end of the Stirling convertor and the Stirling rejector. The GPHS modules' thermal power output and the ASRG's operating environment would generally determine this temperature difference. Figure 14 shows projected power degradation curves for nominal ASRG operations in vacuum and at various fuel loadings, as shown in Table

31. The ASRG's output power decay rates in vacuum and in Mars's atmosphere were estimated at 1.16%/year. In both cases, the GPHS module heat production decay rate is 0.8%/year.

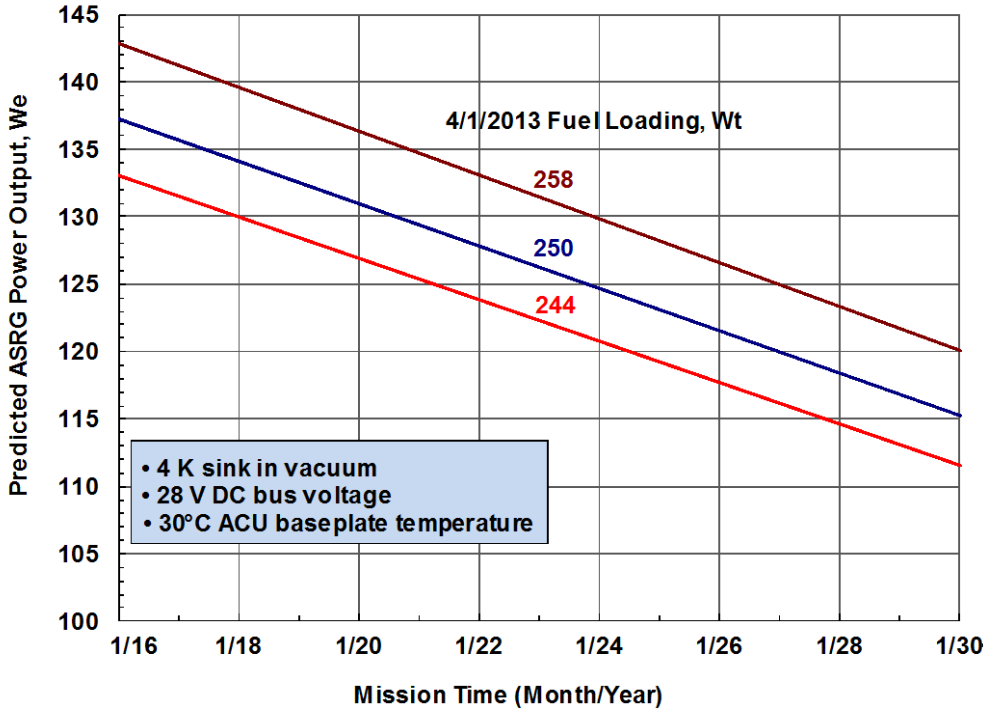

Figure 14. Projected ASRG system input (GPHS modules [W_t]) and output (ASRG operations [W_e]) power.

Figure 15 shows the effect of sink temperature on ASRG output power for operations in vacuum. The ASRG design was required to operate up to a maximum sink temperature of 250 K (-23°C) in vacuum and 240 K (–33°C) in Mars's atmosphere, though with reduced power output.

In addition to other duties (see Table 32), the ASRG's controller would synchronize the phases of the two convertors to minimize the resulting system vibration.

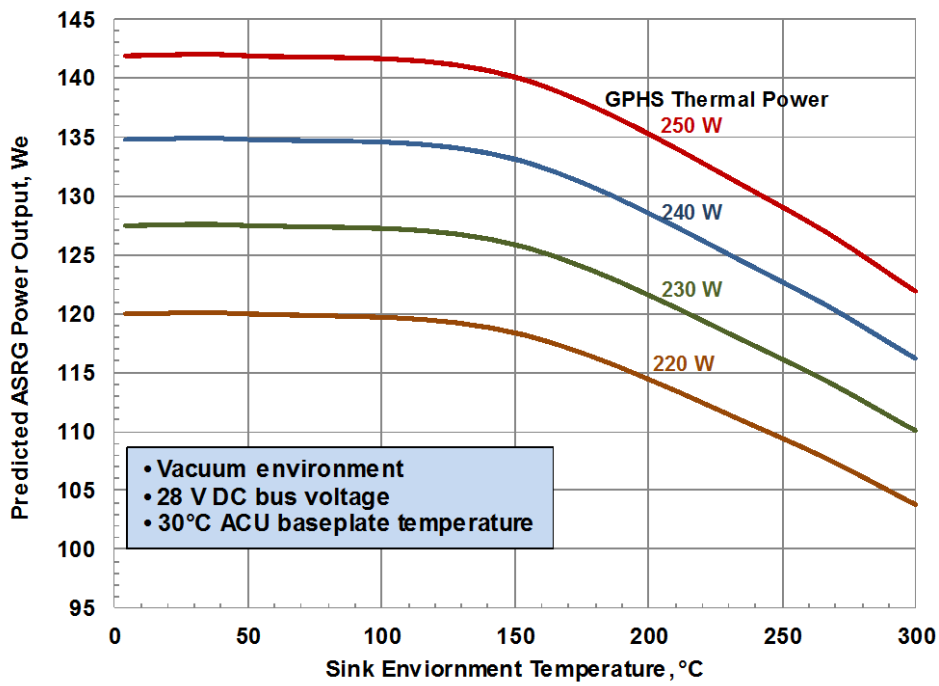

Figure 15. Projected ASRG power output with respect to sink temperature in ideal vacuum conditions.

Table 32. ASRG critical subsystems and functionality.

ASRG Subsystem	Functions
General Housing Assembly	Provides structural support and heat rejection path for the Stirling convertors. Also provides attachment sites for the shunt, spacecraft mount, and optional cooling loop.
Fins	Provides additional surface area beyond the general housing assembly for heat rejection.
Space Vehicle Mounting Interface	Attachment between the ASRG and spacecraft. Spacecraft interface plate is incorporated in the ASRG.
Power Shunts	Provides power load if spacecraft bus load is removed. Attaches to the end of the ASRG opposite the mounting interface.
Pressure Relief Device	Device that punctures a diaphragm allowing argon to escape the ASRG after launch.
Gas Management Valve	Provides gas system access for withdrawing and back filling the ASRG during storage and ground testing.
GPHS Module	Pu-238 fueled thermal source that provides heat to the hot side of the Stirling convertors. The ASRG uses two GPHS modules.
Thermal Insulation	Covers part of the GPHS module to provide high thermal resistance path
Advanced Stirling Convertor (ASC)	Single piston power convertor that converts heat from the GPHS module to piston motion, which generates AC electric power in a linear alternator. The ASRG uses 2 ASCs.
ASC Controller Unit (ACU)	Controls the phases and performance of the convertors, rectifies the AC power to DC and makes it available to the spacecraft, and telemeters ASRG performance data.

7.1.3 Configuration

Table 32 and Table 33 give a list of critical subsystems and mass breakdown for the ASRG design, respectively. Figure 16-Figure 20 show configuration drawings of the ASRG: Figure 16 and Figure 17 show general configuration and dimensions; Figure 18 and Figure 19 indicate major subsystems. Figure 20 shows optional cooling loop integration sites. This Auxiliary Cooling System (ACS) would allow some of the waste heat to be moved into the spacecraft for heating of other components. All subsystems would be contained within the general housing assembly, except for the controller, which could be located up to 2 m from the spacecraft mounting interface end of the ASRG.

Table 33. Projected ASRG mass breakdown.

ASRG subsystem	Mass
General housing assembly	22.5 kg (includes GPHS modules, ASCs, and shunt)
ACU	7 kg
Required ASRG cabling (AC power cable, shunt cable, and command/serial telemetry cable)	2.5 kg
Additional ASRG cabling	1.8 kg/m (up to 2 m)

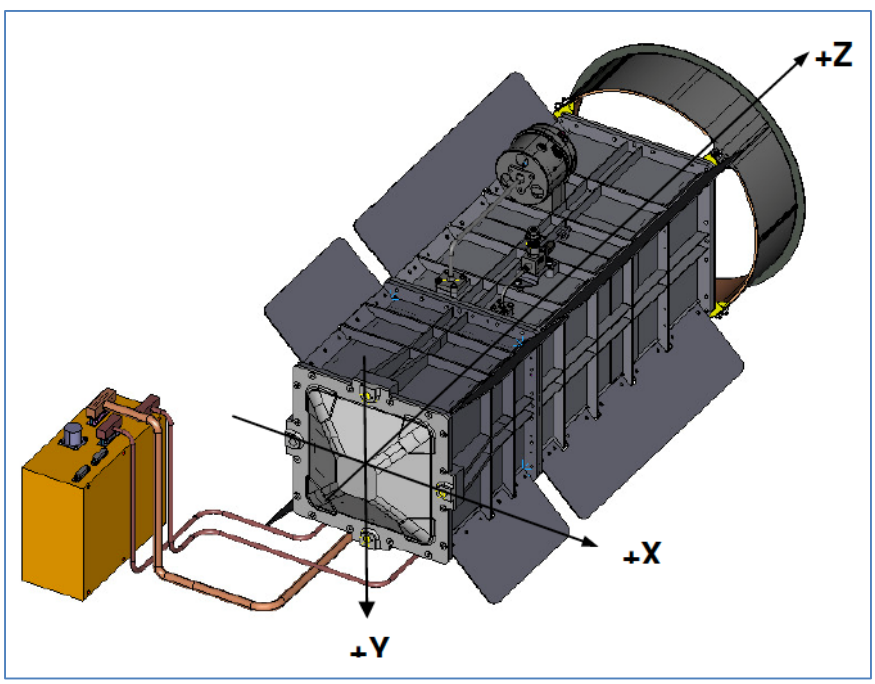

Figure 16. ASRG configuration showing orientation axes. The controller is mounted along the housing X–Z face

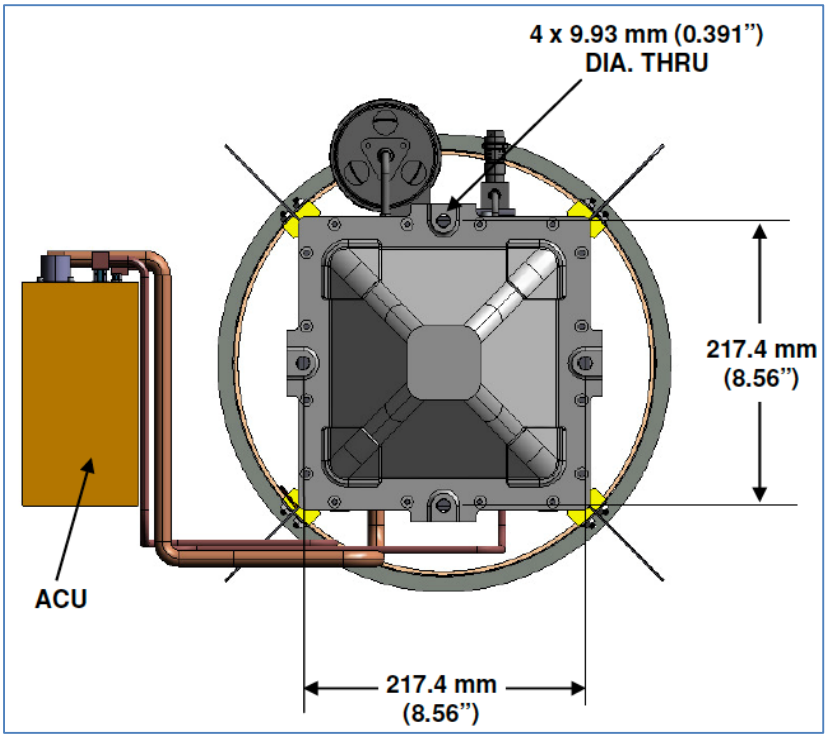

Figure 17. ASRG configuration showing dimensions without fins, gas management valve, and pressure relief device. Including fins, gas management valve and pressure relief device, dimensions are 0.762 m length (Z-axis) by 0.457 m height (Y-axis) by 0.394 m width (X-axis) based on orientation axes in Figure 16. The overall dimensions of the controller unit are 0.204 m length by 0.153 m height by 0.115 m width.

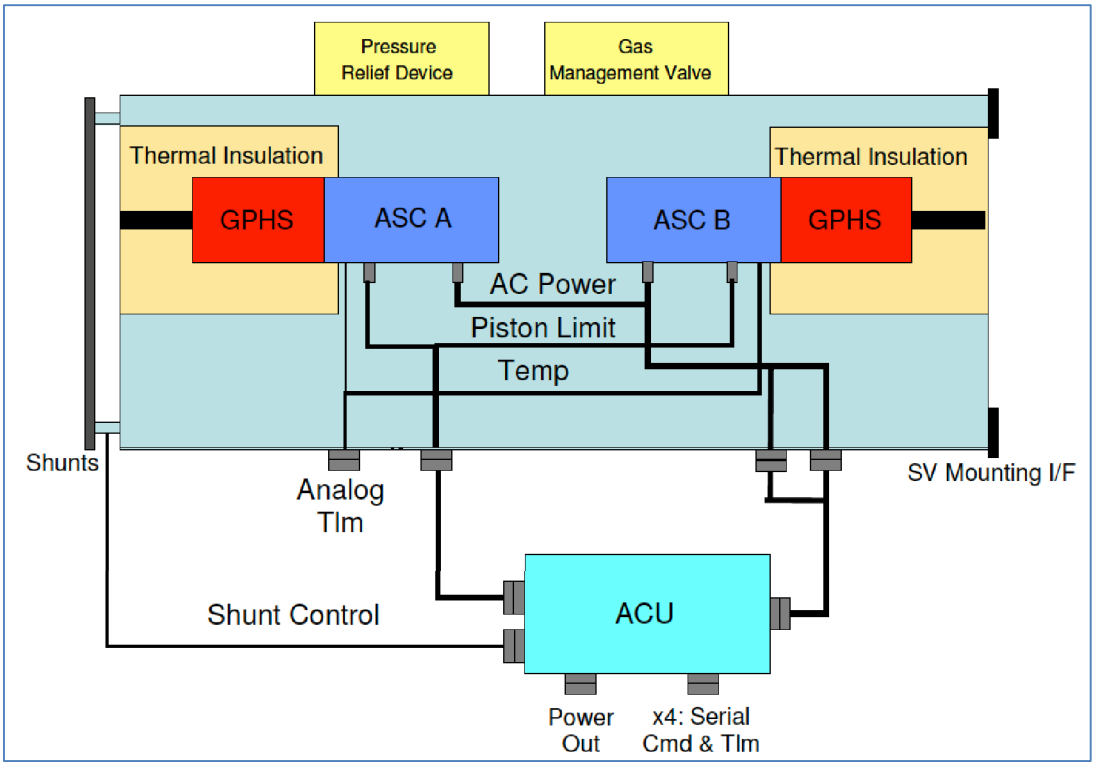

Figure 18. ASRG block diagram.

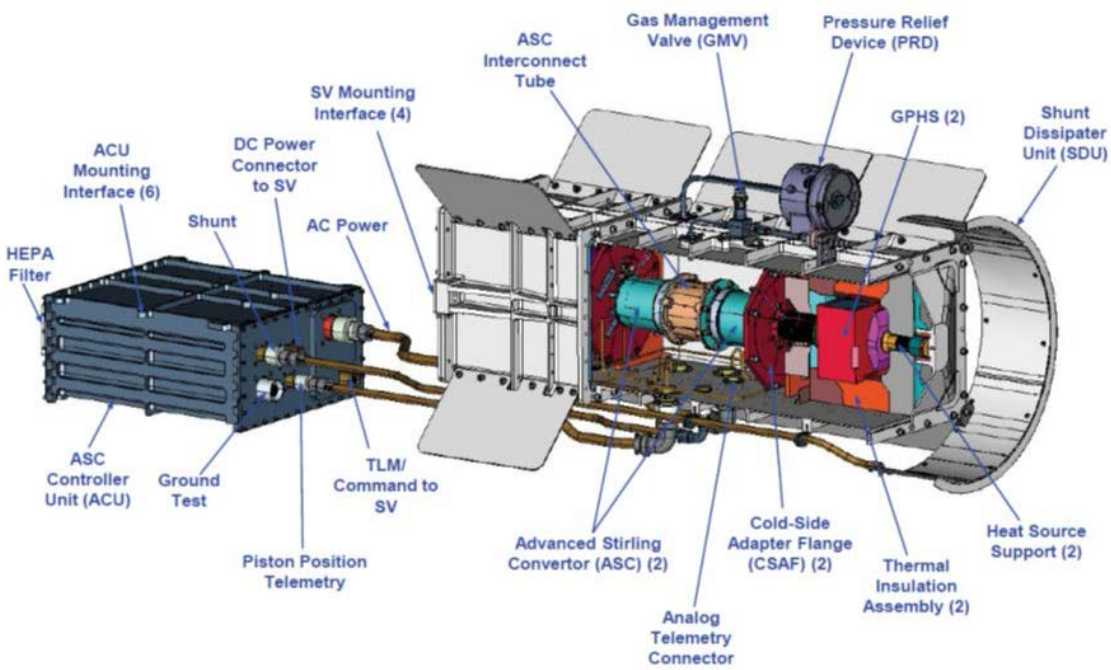

Figure 19. ASRG configuration with subsystem labels.

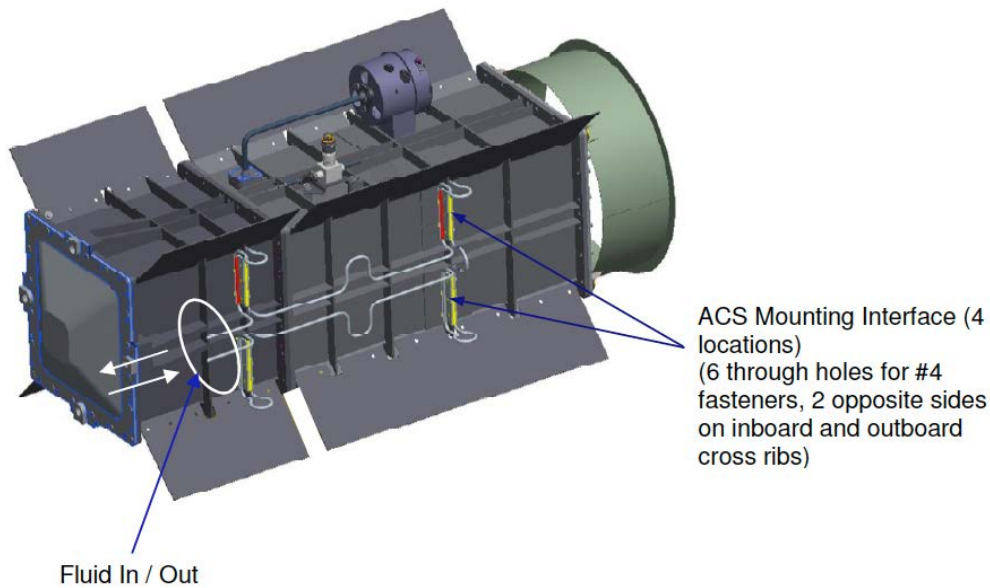

Figure 20. ASRG configuration showing cooling loop integration locations. Indicative of a conceptual user-provided active cooling system (ACS) approach and mounting interfaces.

7.1.4 Nominal Operations

Table 31 and Table 34 show the ASRG's nominal operations performance characteristics and requirements. Since the ASRG would be a dynamic RPS, the spacecraft would have to deal with residual vibration and potential EMI as a result of AC-DC conversion. The controller was designed for mounting externally or internally to the spacecraft, including within an electronics vault. Figure 21 and Figure 22 show the gamma dose and neutron fluence levels with respect to distance from the ASRG.

Table 34. Nominal ASRG operation characteristics.

Parameter	ASRG value		Comments
Radiation tolerance	50 krad (Si) behind 60 mil aluminum shielding		Requirement driven by controller
Heat rejection requirement (vacuum)	330 W_t (BOL)	288 W_t (EODL)	Assumes 500-W_t initial GPHS thermal load
Heat rejection requirement (Mars atmosphere)	345 W_t (BOL)	313 W_t (EODL)	Assumes mission profile as described in the Introduction
Heat generated by controller	~20 W_t	~20 W_t	
Thermal sink temperature	250K (vacuum)	240K (Mars atmosphere)	
ASRG cold side temperature	313 K (40°C) [BOL]		Temperature of general housing assembly at BOL
ASRG hot side BOL temperature	1033 K (760°C) [BOL]		Hot end temperature of Stirling convertor
RPS vibration	~10 N @ 102.2 ± 0.2 Hz		Measured
G-loading limit	18-g peak quasi-steady accel.		
Acoustic loading limit	Shown in ASRG ICD		

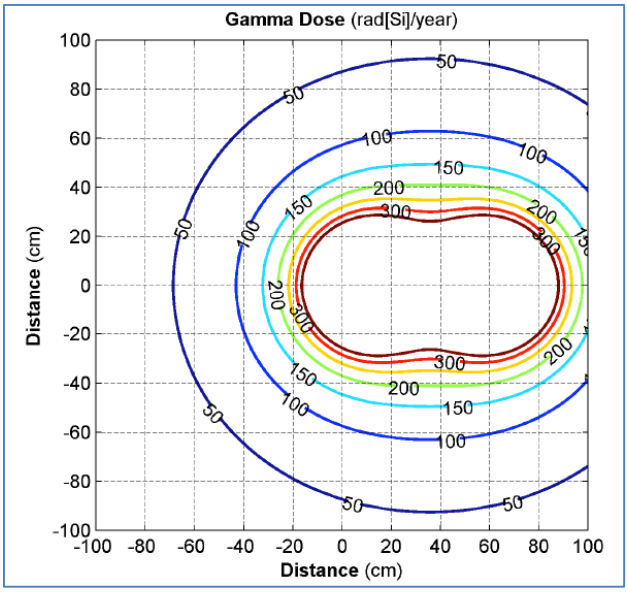

Figure 21. ASRG-induced gamma dose as a function of distance.

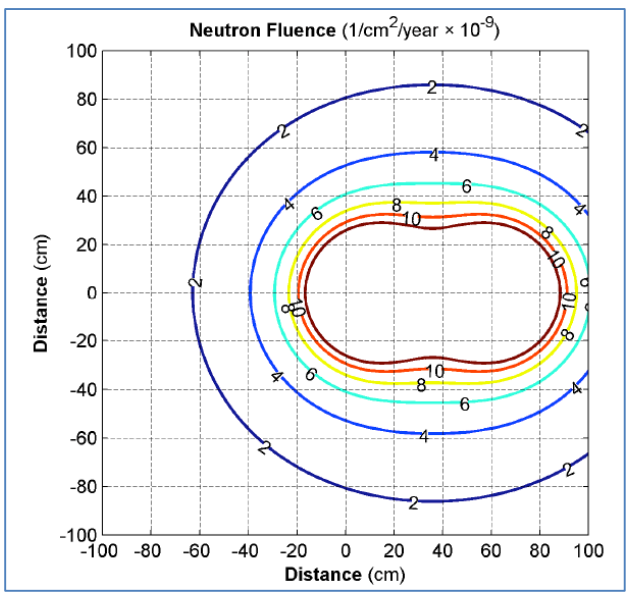

Figure 22. ASRG-induced neutron fluence as a function of distance.

The ASRG would be fueled at most three years prior to being integrated onto the spacecraft at the launch pad. During ground operations before integration, the ASRG would have been transported in in the ASRG-customized 9904 RTG shipping container, which provides cooling, power shunting, and continuous monitoring. While in transport and during ground testing an argon gas re-pressurization (0.137 MPa) would be required every 30 days. Handling/lifting mounts would attach to specific points on the housing assembly for use during integration with the spacecraft.

7.1.4.1 Thermal Compliance

Assuming the minimum acceptable GPHS module loading of 250 W_t, the total thermal output from the fuel would be 500 W_t at BOL, 363 W_t of which would need to be rejected during vacuum operation. At EODL, the rejected heat would drop to 323 W_t. The corresponding figures for Mars atmosphere operation, and Mars mission definitions of BOL and EODL, would be 385 W_t at BOL and 335 W_t at EODL. To meet operational requirements, the maximum thermal sink temperature would be 250 K (–23°C) in deep space vacuum and 240 K (–33°C) in Mars atmosphere.

Nominally heat would be rejected through the housing assembly and fins, however the ASRG could accommodate cooling loops which would move waste heat from the convertor to either other parts of the spacecraft or to an extended surface to allow ASRG operation in higher temperatures environments. Figure 23 shows the estimated amount of waste heat and corresponding output power for various cooling loop temperatures. The cooling loop temperature would affect the ASRG heat rejection temperature, and as a result would provide a slightly higher DC power output than in the same sink environment (as shown in Figure 15) without the heat removal. Figure 20 shows cooling loop attachment sites. Integration and monitoring of the cooling loop system would be considered a spacecraft responsibility.

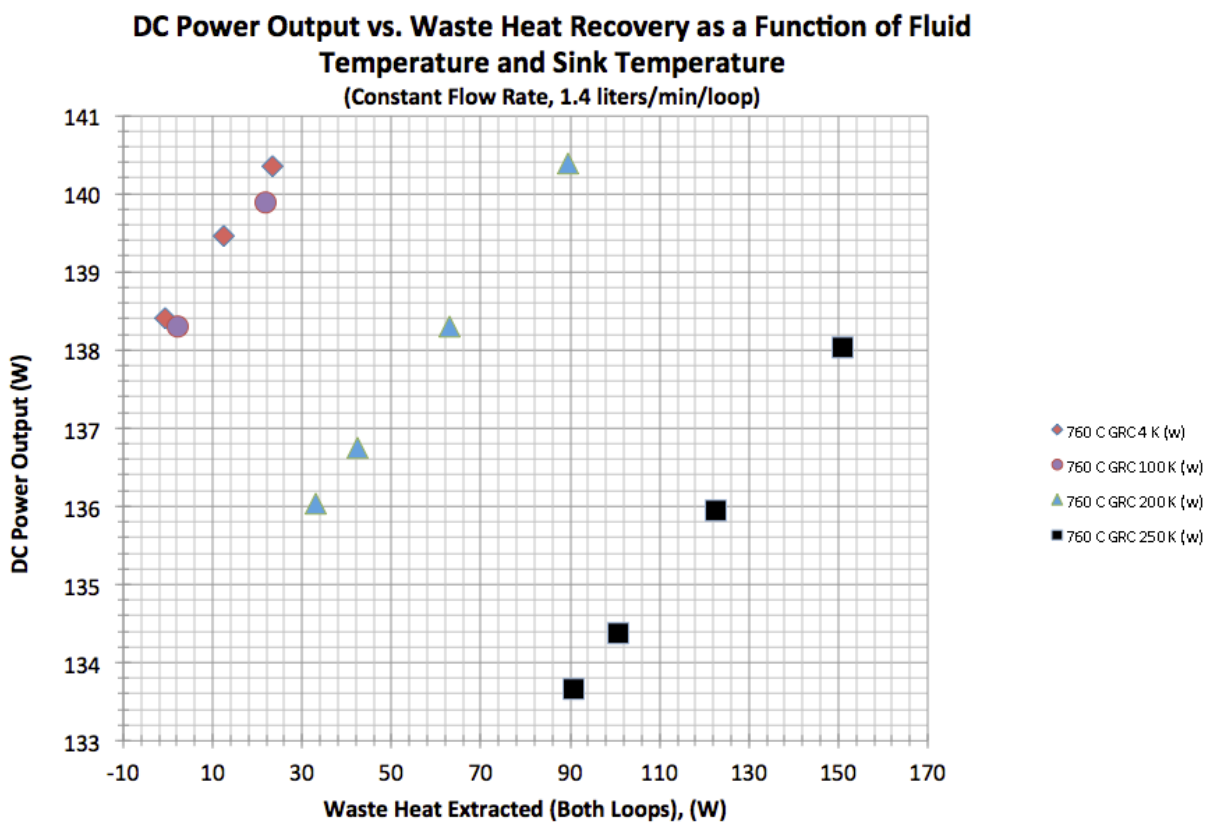

Figure 23. ASRG-induced neutron fluence as a function of distance

7.1.4.2 Mechanical Compliance

The ASRG would attach to the spacecraft via a four-bolt cantilever mount, as shown in Figure 17. The spacecraft side of the mounting structure would need to tolerate ASRG vibration levels. Measurements of the ASRG Engineering Unit have shown approximately 10 N of force at 102.2 Hz at the mounting structure. Figure 24 shows peak disturbance force to the spacecraft, which is dependent on the axial frequency of the spacecraft provided mounting structure under nominal operation. In the event of a failure of an ASC, the disturbance force increases. The spacecraft-received disturbance force as a function of mounting frequency is shown in Figure 25 for a failed ASC.

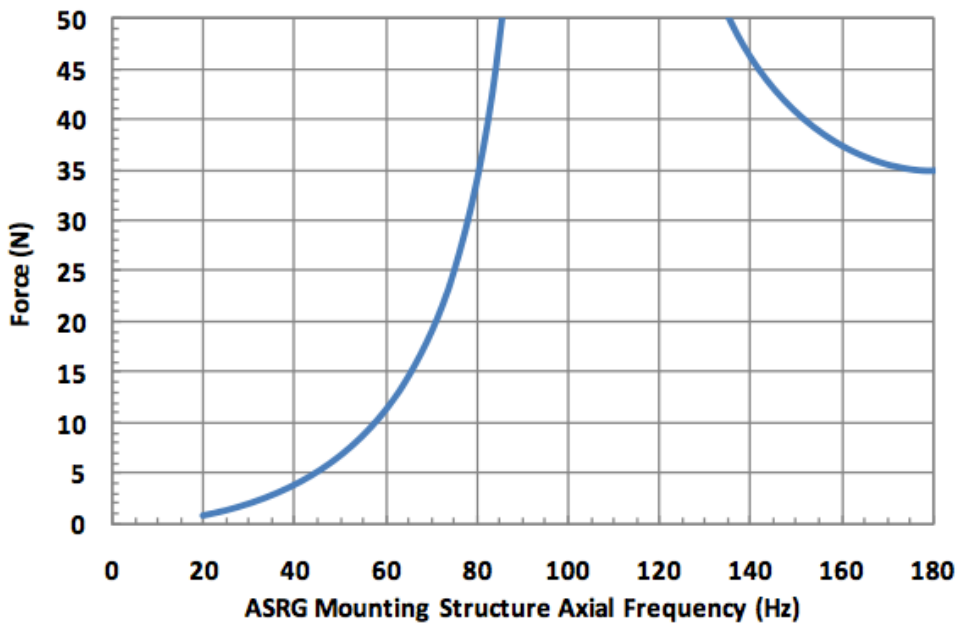

Figure 24. Disturbance force to the spacecraft during normal operation.

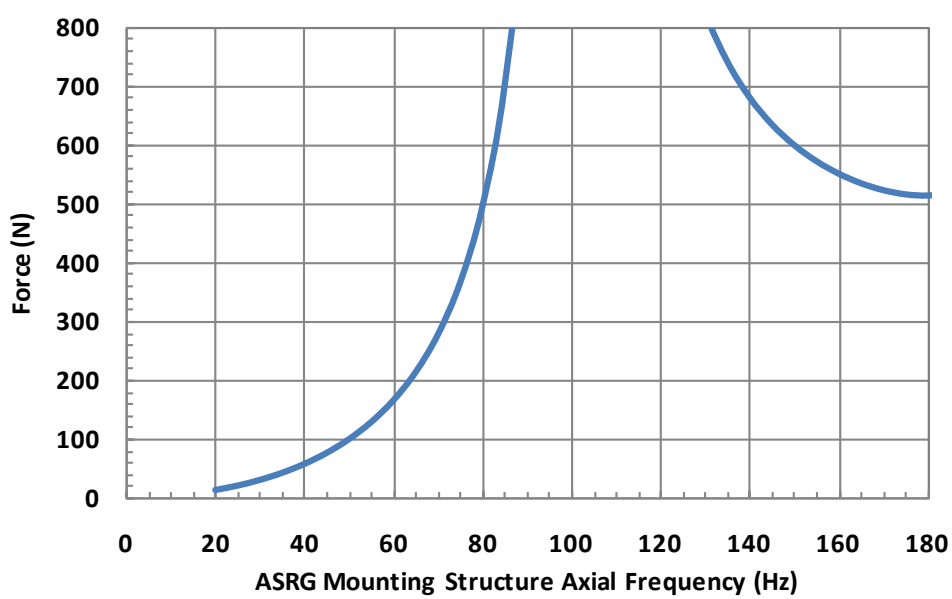

Figure 25. Disturbance force to the spacecraft during single-ASC operation.

7.1.4.3 Fault Modes

Table 35 shows the ASRG's known fault modes. Of those modes, the only single-point fault mode with a major effect on ASRG performance would be failure of a single power convertor. In such a failure, the ASRG could provide output power from the remaining non-failed convertor. The failed convertor would be electrically isolated from the spacecraft bus, and the output DC power from the single convertor would be a minimum of 45% of the value shown in Table 31 and Figure 15. The failed convertor would no longer produce power, and the thermal insulation would eventually densify, providing a heat leak path through the general housing assembly. During this fault the convertors would no longer be in phase, which would lead to vibration imbalance. Figure 25 shows the vibration levels in this fault mode.

Table 35. Potential ASRG fault modes.

Fault Mode	Fault Description	Fault Mitigation
Single power convertor failure	One Stirling convertor fails, while the other remains operational.	The failed convertor stops working and the increase in temperature around the GPHS module deforms the thermal insulation, thus rejecting heat through the housing assembly. Power output of one convertor would be approximately 45% of the fully functioning unit due to increased housing temperature and controller losses. With a multiple ASRG unit mission, the functional convertor could be commanded to shut down if the spacecraft is unable to tolerate the increased vibration, thus resulting in total loss of power from one ASRG.
Spacecraft power load is not available	Occurs any time the power load is removed from the ASRG.	The ASRG is a constant power current source and requires a load for current dissipation. The ASRG operates nominally with a bus voltage range of 22-34 VDC. Should the bus voltage deviate from this span, the ASRG would disconnect from the bus and dissipate its power via the ASRG's integrated shunt. The ASRG would reconnect when the bus voltage returns to within the operating voltage range.
Controller board failure	One controller board within the controller box fails	Controller has three controller boards of which one is redundant (two controller boards are required for operation). The controller switches from the failed card to the backup card with no operational changes.

7.1.5 Schedule

The ASRG development was assessed to be between TRL 3 and 4. The next step of development would involve building an ASRG qualification unit using finalized convertor and controller designs. Although the ASRG flight project was canceled, work is continuing at GRC and Lockheed Martin on research appropriate to all sizes of future SRGs.

In early 2015, an independent board was established to assess the TRL of the ASRG at the point when the ASRG Flight Project transitioned to the Stirling Technology Project.

The board assessed the readiness of the ASRG's critical technology elements (CTEs) as configured for flight. These CTEs included the two opposed Stirling converters, the generator

housing, and the active controller, which were assessed against the set of requirements the design was to meet, including power, mass, life and concept of operations.

Although the complete details are beyond the scope of this book, the board assessed over 14 CTEs and determined that the overall system was at TRL 3. A major contribution to this determination was a lack of system-level testing of the final flight hardware components to demonstrate requirements validation. Table 36 shows ASRG milestones should the project be revived.

Table 36. Projected ASRG milestones.

ASRG TRL level	3-4
Current project milestone	Build and test of qualification units
Next project milestone	Build and test of flight units

7.1.6 References

ASRG User ICD, LMA 912IC002085, Lockheed Martin Energy Systems, Philadelphia, PA, May 2010

NASA Research and Technology Program and Project Management Requirements, NASA Procedural Requirements 7120.8, National Aeronautics and Space Administration, http://nodis3.gsfc.nasa.gov/displayDir.cfm?t=NPR&c=7120&s=8

8 Appendix D – Potential Future Systems – High Power

8.1 Segmented Thermoelectric & Modular Radioisotope Thermoelectric Generator (STEM-RTG)

8.1.1 Introduction

The Segmented Thermoelectric & Modular Radioisotope Thermoelectric Generator (STEM-RTG) is a conceptual design that would use advanced thermoelectric materials for higher convertor efficiency, as well as a modular design to allow flexibility to meet various missions' power needs. The STEM-RTG would be sized by stacking up segments of GPHS modules, as shown in Figure 26. Each segment could be one, two, or four GPHS modules high, depending on the final design. The minimum size of the STEM-RTG would be the segment size (one, two, or four), while the maximum size of the STEM-RTG would be 16–18 GPHS modules (the GPHS-RTG used 18). Like the GPHS-RTG, the STEM-RTG would operate only in vacuum.

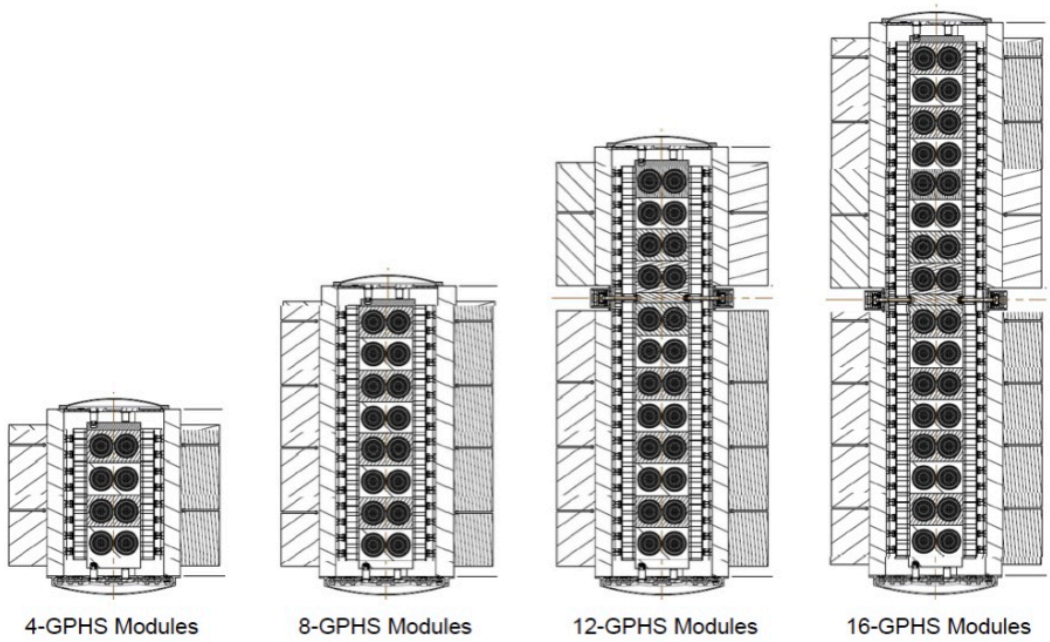

Figure 26. Conceptual STEM-RTG configurations based on 4 GPHS module stackable segment design.

The STEM-RTG would consist of three main elements: the GPHS assembly, the convertor assembly, and the convertor housing. The GPHS assembly would hold the Step 2 GPHS modules. The convertor assembly would consist of thermocouples, which are described in more detail below. The convertor housing would provide the conductive pathway between the cold side of the thermocouples and the environment as well as structural support and mounting interfaces with the spacecraft. Power would be produced through the Seebeck effect as described in Section 2.1.3.

The STEM-RTG would use advanced thermoelectric materials that are being developed by NASA's Advanced Thermoelectric Convertor (ATEC) project. With these the STEM-RTG would be expected to achieve a conversion efficiency of 9–11% at BOM. Table 37-Table 40

show expected performance characteristics of the STEM-RTG with 4–16 GPHS modules, assuming a 4 K (–269°C) thermal sink and a BOL thermal output of at least 244 W_t from each GPHS.

Table 37. Conceptual 4-GPHS STEM-RTG performance characteristics.

Parameter	4-GPHS STEM-RTG value	
Power [BOM/EODL] (vacuum)	93 W_e [BOM]	71 W_e [EODL]
System mass	16.2 kg	
Specific power [BOM/EODL] (vacuum)	5.7 W_e/kg [BOM]	4.4 W_e/kg [EODL]
Conversion Efficiency (vacuum)	9.5 % [BOM]	8.1% [EODL]
Power Degradation Rate	1.6 %/year	
No. GPHS modules	4	
Pu-238 mass	1.8 kg	
Operating Environments	Vacuum	
System Lifetime	14 years	

Table 38. Conceptual 8-GPHS STEM-RTG performance characteristics.

Parameter	8-GPHS STEM-RTG value	
Power [BOM/EODL] (vacuum)	205 W_e [BOM]	156 W_e [EODL]
System mass	28.0 kg	
Specific power [BOM/EODL] (vacuum)	7.3 W_e/kg [BOM]	5.6 W_e/kg [EODL]
Conversion Efficiency (vacuum)	10.5 % [BOM]	8.9% [EODL]
Power Degradation Rate	1.6 %/year	
No. GPHS modules	8	
Pu-238 mass	3.5 kg	
Operating Environments	Vacuum	
System Lifetime	14 years	

Table 39. Conceptual 12-GPHS STEM-RTG performance characteristics.

Parameter	12-GPHS STEM-RTG value	
Power [BOM/EODL] (vacuum)	314 W_e [BOM]	239 W_e [EODL]
System mass	41.0 kg	
Specific power [BOM/EODL] (vacuum)	7.7 W_e/kg [BOM]	5.8 W_e/kg [EODL]
Conversion Efficiency (vacuum)	10.7 % [BOM]	9.1% [EODL]
Power Degradation Rate	1.6 %/year	
No. GPHS modules	12	
Pu-238 mass	5.3 kg	
Operating Environments	Vacuum	
System Lifetime	14 years	

Table 40. Conceptual 16-GPHS STEM-RTG performance characteristics.

Parameter	16-GPHS STEM-RTG value	
Power [BOM/EODL] (vacuum)	425 W_e [BOM]	324 W_e [EODL]
System mass	52.8 kg	
Specific power [BOM/EODL] (vacuum)	8.0 W_e/kg [BOM]	6.2 W_e/kg [EODL]
Conversion Efficiency (vacuum)	10.9 % [BOM]	9.2% [EODL]
Power Degradation Rate	1.6 %/year	
No. GPHS modules	16	
Pu-238 mass	7.0 kg	
Operating Environments	Vacuum	
System Lifetime	14 years	

8.1.2 Power Conversion Technology

The STEM-RTG would use the Seebeck effect for power conversion. Heat generated from the Pu-238 decay in the GPHS modules would heat the hot end of the thermoelectric couple, while the excess heat would be radiated into space via the housing and fins. The difference in temperature between the hot and cold sides of the thermocouples would directly impact the fraction of thermal energy that is converted to electricity, or the conversion efficiency. The summed contribution of hundreds of thermoelectric couples would yield the total power produced.

The ATEC project is researching different segmented couples and optimizing their efficiencies to ensure they can meet the specifications of the STEM-RTG. To maintain a generator output voltage of 32.8 V across, all possible configurations would necessitate the use of segmented skutterudite/$La_{3-x}Te_4$/$Yb_{14}MnSb_{11}$ thermoelectric multi-couple modules (as opposed to discrete couples). Segmented couples allow for higher conversion efficiency by having different thermoelectric materials in series, each handling the temperature range in which they operate more efficiently: n-type and p-type filled skutterudites for the lower temperature segments and n-type $La_{3-x}Te_4$ and p-type $Yb_{14}MnSb_{11}$ rare earth compounds for the higher temperature segments.

The STEM-RTG would operate only in the vacuum environment. Power output and other key characteristics are listed in Table 37-Table 40.

8.1.3 Configuration

The STEM-RTG would have the same critical subsystems as other RTGs: the GPHS assembly, the convertor assembly, and the convertor housing. The GPHS assembly contains one or more segments of one, two, or four Step 2 GPHS modules. The convertor assembly contains couples that when subjected to ΔT across the two ends, would generate an electrical current via the Seebeck effect. The thermocouples are mounted via fasteners attached through the convertor housing. The convertor housing provides structural support for the GPHS units and thermocouples to withstand launch g-loads. Radiator fins and cooling loops are design options.

The 4-GPHS STEM-RTG would be 0.36 m in length and 0.40 m in diameter from tip to tip of its radiator fins. The 8-GPHS STEM-RTG would be 0.57 m in length and 0.45 m in diameter from tip to tip of its radiator fins. The 12-GPHS STEM-RTG would be 0.84 m in length and 0.47 m in diameter from tip to tip of its radiator fins. The 16-GPHS STEM-RTG would be 1.07 m in length

and 0.47 m in diameter from tip to tip of its radiator fins. All configurations would have a housing diameter of 0.20 m.

8.1.4 System Considerations

8.1.4.1 Nominal Operations

Since its power conversion mechanism has no moving parts, a STEM-RTG device would not impose any vibrational loads onto the spacecraft attachment fixture. Table 41-Table 44 show nominal operation characteristics for the 4–16 GPHS configurations of the STEM-RTG. Since the technology is currently < TRL 3, any values not shown below may be assumed to be similar to those of the GPHS-RTG.

As with other RTGs, the STEM-RTG would be fueled and delivered by the DOE for integration into the spacecraft at the launch facility.

Table 41. Nominal conceptual 4-GPHS STEM-RTG operating characteristics.

Parameter	4-GPHS STEM-RTG value		Comments
Heat rejection requirement	907 W_t [BOM]	805 W_t [EODL]	Assumes 250 W_t per GPHS module
Conversion efficiency	9.5 % [BOM]	8.1 % [EODL]	
TE convertors cold Side Temp.	523 K (250°C) [BOM]		
TE convertors hot-side Temp.	1273 K (1000°C) [BOM]		
Magnetic field intensity	≤25nT @ 1.0 m		
Launch acoustic environment	0.3 g^2/Hz (Delta 4H)		

Table 42. Nominal conceptual 8-GPHS STEM-RTG operation characteristics.

Parameter	8-GPHS STEM-RTG value		Comments
Heat rejection requirement	1795 W_t [BOM]	1596 W_t [EODL]	Assumes 250 W_t per GPHS module
Conversion efficiency	10.5 % [BOM]	8.9 % [EODL]	
TE convertors cold Side Temp.	473 K (200°C) [BOM]		
TE convertors hot-side Temp.	1273 K (1000°C) [BOM]		
Magnetic field intensity	≤25nT @ 1.0 m		
Launch acoustic environment	0.3 g^2/Hz (Delta 4H)		

Table 43. Nominal conceptual 12-GPHS STEM-RTG operating characteristics.

Parameter	12-GPHS STEM-RTG value		Comments
Heat rejection requirement	2686 W_t [BOM]	2389 W_t [EODL]	Assumes 250 W_t per GPHS module
Conversion efficiency	10.7 % [BOM]	9.1 % [EODL]	
TE convertors cold Side Temp.	523 K (250°C) [BOM]		
TE convertors hot-side Temp.	1273 K (1000°C) [BOM]		
Magnetic field intensity	≤25nT @ 1.0 m		
Launch acoustic environment	0.3 g^2/Hz (Delta 4H)		

Table 44. Nominal conceptual 16-GPHS STEM-RTG operation characteristics.

Parameter	16-GPHS STEM-RTG value		Comments
Heat rejection requirement	3575 W_t (BOM)	3180 W_t (EODL)	Assumes 250 W_t per GPHS module
Conversion efficiency	10.9 % (BOM)	9.2 % (EODL)	
TE convertors cold Side Temp.	473 K (200°C) [BOM]		
TE convertors hot-side Temp.	1273 K (1000°C) [BOM]		
Magnetic field intensity	≤25nT @ 1.0 m		
Launch acoustic environment	0.3 g^2/Hz (Delta 4H)		

8.1.4.2 Thermal Compliance

The total thermal power from the 4-16 GPHS blocks would be 1,000–4,000 W_t at BOM. As in other RTGs, the STEM-RTG would dissipate its heat through its housing and fins. Although cooling loops aren't currently incorporated, if additional cooling is desired, it could be designed to reject the waste heat through a liquid thermal control loop.

8.1.4.3 Mechanical Compliance

Since the STEM-RTG is still < TRL 3 its g-load tolerance is an expectation, not a derived quantity, but it would be expected to tolerate inertial loads similar to those of the GPHS-RTG, if not higher. Expectations are that it would tolerate a launch acoustic environment of up to 0.3 g_2/Hz, which is sufficient for a Delta 4 Heavy launch vehicle.

8.1.4.4 Fault Modes

Aside from uncontrollable catastrophic failures such as an impact anomaly, the STEM-RTG's failure modes typically involve graceful degradation. The couples would be configured in cross-strapped pairs so current could continue to flow even if a single couple is damaged or fails completely. Two couples of the same node of the same string would have to fail to yield a noticeable loss in power. Although such a failure would reduce the overall power output of the RTG, it would not end the mission. In the many years that RTGs have flown on multiple spacecraft, none have failed due to this scenario.

8.1.5 Schedule

The TRL of the STEM-RTG is assessed at ~2. This advanced concept has undergone some conceptual study to determine feasibility. The STEM-RTG thermocouple development is currently being done under NASA's ATEC project and is expected to be at TRL 3–4 by 2019. Then technology maturation could advance the STEM-RTG to TRL 5 by ~2024. NASA would then transfer the technology to the DOE and its contractors for system design, development, assembly, and further testing, with the first unit available by ~2029. Table 45 lists details of the STEM-RTG schedule.

8.1.6 References

Nuclear Power Assessment Study Final Report, TSSD-23122, Johns Hopkins University Applied Physics Laboratory, Laurel, MD, Feb. 2015. http://solarsystem.nasa.gov/rps/docs/NPAS.pdf

Table 45. Projected STEM-RTG project schedule.

STEM-RTG TRL level	2
Current project milestone	Expand from single couple modules to multi-couple modules
Next project milestone	Technology development to TRL 3-4
Flight System Completion Date	Envisioned to be ready for outer planet missions as early as 2029

8.2 High Power Stirling Radioisotope Generator (HPSRG)

8.2.1 Introduction

The High Power Stirling Radioisotope Generator (HPSRG) is a notional group of designs for a higher power system in the SRG family. The SRG family uses Stirling dynamic power conversion technology to convert thermal energy into electrical, with high conversion efficiencies and specific powers. The HPSRG design modifies the basic ASRG layout to increase output power; it can be thought of as a larger ASRG consisting of two dual-opposed Stirling converters, using the thermal output of four (4-GPHS SRG), six (6-GPHS SRG), or eight (8-GPHS SRG) GPHS modules. Though this family of design concept uses technologies developed for the ASRG, the HPSRG remains at a conceptual phase and none of the concepts have been built or tested as a system. Thus it is at a lower TRL, still early in the development process. Table 46-Table 48 summarize the anticipated performance parameters for each size of notional HPSRG, assuming a 4 K (–269°C) thermal sink and BOL thermal output of 250 W_t from each GPHS.

Table 46. Conceptual 4-GPHS SRG performance characteristics.

Parameter	4-GPHS SRG value	
Power [BOM/EODL] (vacuum)	232 W_e [BOM]	193 W_e [EODL]
System mass	32.0 kg	
Specific power [BOM/EODL] (vacuum)	7.3 W_e/kg [BOM]	6.0 W_e/kg [EODL]
Conversion efficiency (vacuum)	23.2% [BOM]	22.0% [EODL]
Power degradation rate (vacuum)	1.2 %/year	
No. GPHS modules	4	
Pu-238 mass	1.8 kg	
Operating environments	Vacuum	
System lifetime	14 years+3 years storage	

Table 47. Conceptual 6-GPHS SRG performance characteristics.

Parameter	6-GPHS SRG value	
Power [BOM/EODL] (vacuum)	357 W_e [BOM]	297 W_e [EODL]
System mass	46.8 kg	
Specific power [BOM/EODL] (vacuum)	7.6 W_e/kg [BOM]	6.3 W_e/kg [EODL]
Conversion efficiency (vacuum)	23.8% [BOM]	22.6% [EODL]
Power degradation rate (vacuum)	1.2 %/year	
No. GPHS modules	6	
Pu-238 mass	2.6 kg	
Operating environments	Vacuum	
System lifetime	14 years+3 years storage	

Table 48. Conceptual 8-GPHS SRG performance characteristics.

Parameter	8-GPHS SRG value	
Power [BOM/EODL] (vacuum)	492 W_e [BOM]	409 W_e [EODL]
System mass	64.6 kg	
Specific power [BOM/EODL] (vacuum)	7.6 W_e/kg [BOM]	6.3 W_e/kg [EODL]
Conversion efficiency (vacuum)	24.6% [BOM]	23.3% [EODL]
Power degradation rate (vacuum)	1.2 %/year	
No. GPHS modules	8	
Pu-238 mass	3.5 kg	
Operating environments	Vacuum	
System lifetime	14 years+3 years storage	

Figure 27 shows a conceptual view of an 8-GPHS SRG.

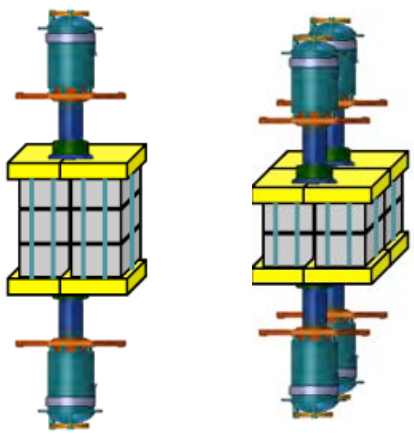

Figure 27. Potential generator configurations for the 6-GPHS and 8-GPHS SRG.

8.2.2 Power Conversion Technology

The HPSRG would operate on the Stirling thermodynamic cycle, described in Section 2.2.3 – Stirling Conversion Technology.

This HPSRG design would use a dual-opposed Stirling convertor configuration with one-half the GPHS modules dedicated to each convertor, and the same 247LC heater head material and random fiber metallic regenerator as used in ASRG. It would make a few changes to increase efficiency: a higher temperature version of the ASRG NdFeB alternator magnets, multi-layer insulation (MLI) instead of Microtherm HT, and water-based heat pipes for cold-end heat rejection.

The HPSRG's conversion efficiency would depend on the temperature difference between the hot and cold ends of the converters. At nominal vacuum conditions, defined by a 4 K (–269°C) sink temperature, and a GPHS fuel loading of ~250 W_t, the HPSRG would yield from 232 to 492 W_e at BOM and would degrade at a rate of 1.16% per year, reaching a final EODL output from 193 to 409 W_e, respectively. Because these designs use MLI, operation in Mars's atmosphere would not be possible. Future designs could replace the MLI with solid insulation for use in Mars's atmosphere.

8.2.3 Configuration

Table 49 gives a list of critical subsystems for the High Power SRG concept. Due to the low TRL, all configuration descriptions are notional.

Table 49. Critical subsystems for the High Power SRG concept.

HPSRG Subsystem	Functions
General Housing Assembly	Provide structural support and heat rejection path for Stirling convertors; provide attachment sites for the shunt, spacecraft mount, and optional cooling loop.
Space Vehicle Mounting Interface	Attachment between the HPSRG and spacecraft. Spacecraft interface plate is incorporated in the HPSRG.
Power Shunts	Provides power load if spacecraft bus load is removed. Attaches to the end of the HPSRG opposite the mounting interface.
Pressure Relief Device	Punctures a diaphragm allowing atmospheric air to escape the HPSRG after launch.
Gas Management Valve	Provides gas system access for withdrawing and back filling the HPSRG gas system during storage and ground testing.
GPHS Module	Plutonium-fueled thermal source that provides heat to the hot side of the Stirling convertors. The HPSRG would use 4 to 8 GPHS modules.
Thermal Insulation	Covers part of the GPHS module to ensure that optimal heat is funneled to the hot side of the power convertor.
Stirling Convertor	Single piston power convertor that converts heat from the GPHS module to piston motion, which generates AC electric power in a linear alternator. The HPSRG would use two dual-opposed convertors.
ASC Controller Unit	Controls the phases and performance of the convertors, rectifies the AC power to DC and makes it available to the spacecraft, and telemeters HPSRG performance data.

8.2.4 System Considerations

The HPSRG design is derived from the current ASRG architecture. Because of this it would be subject to most of the same system constraints and considerations as the ASRG. Residual vibration and thermal accommodation would be some of the more important considerations when using the HPSRG. Table 50-Table 52 contains HPSRG notional operating characteristics. Technologies specific to the HPSRG under development at NASA GRC include a higher power convertor, a higher power controller, a heat pipe heat rejection radiator, a multi-layer insulation, and a heat pipe cold side adaptor flange.

Table 50. Nominal conceptual 4-GPHS SRG operating characteristics.

Parameter	4-GPHS SRG Value		Comments
Radiation tolerance	50 krad (Si) behind 60 mil aluminum shielding		Radiation tolerance driven by controller, assumed to be similar to the ASRG controller
Heat rejection requirement	733 W_t [BOM]	TBS [EODL]	Assumes 250W_t per GPHS module [BOM]
Heat generated by controller	~30 W_t		
Cold-side temperature	450 K (177°C)		Convertor Cold End Temperature
Hot-side temperature	1033 K (760°C)		Assumes ASRG hot end Stirling converter temperature
Dimensions	0.20 m X 0.89 m		Cylinder
RPS vibration	<3 N @ ~ 100 Hz		Vibration is still uncertain but should be similar to current ASRG requirements (shown)
G-loading limit	TBR		
Acoustic loading limit	TBR		

Table 51. Nominal conceptual 6-GPHS SRG operating characteristics.

Parameter	6-GPHS SRG Value		Comments
Radiation tolerance	50 krad (Si) behind 60 mil aluminum shielding		Radiation tolerance driven by controller, assumed to be similar to the ASRG controller
Heat rejection requirement	1089 W_t [BOM]	TBS [EODL]	Assumes 250W_t per GPHS module [BOM]
Heat generated by controller	~40 W_t		
Cold-side temperature	450 K (177°C)		Convertor Cold End Temperature
Hot-side temperature	1033 K (760°C)		Assumes ASRG hot end Stirling converter temperature
Dimensions	0.20 m X 0.95 m		Cylinder
RPS vibration	<3 N @ ~ 100 Hz		Vibration is still uncertain but should be similar to current ASRG requirements (shown)
G-loading limit	TBR		
Acoustic loading limit	TBR		

Table 52. Nominal conceptual 8-GPHS SRG operating characteristics.

Parameter	8-GPHS SRG Value		Comments
Radiation tolerance	50 krad (Si) behind 60 mil aluminum shielding		Radiation tolerance driven by controller, assumed to be similar to the ASRG controller
Heat rejection requirement	1433 W_t [BOM]	TBS [EODL]	Assumes 250W_t per GPHS module [BOM]
Heat generated by controller	~50 W_t		
Cold-side temperature	430 K (17°C)		Convertor Cold End Temperature
Hot-side temperature	1033 K (250°C)		Assumes ASRG hot end Stirling converter temperature
Dimensions	0.20 m X 1.19 m		Cylinder
RPS vibration	<3 N @ ~ 100 Hz		Vibration is still uncertain but should be similar to current ASRG requirements (shown)
G-loading limit	TBR		
Acoustic loading limit	TBR		

8.2.4.1 Mechanical Considerations

SRGs would rely on opposing phase-synchronized converters to almost entirely cancel the vibration caused by the reciprocating pistons. Like the ASRG, the HPSRG would use opposing converters to reduce vibration. It is expected to have similar (< 3 N) of net force transmitted to the spacecraft at around 100 Hz. The exact configuration of those converters is still in development, so details of the HPSRG's vibration environment are uncertain but the spacecraft designer should consider some residual vibration in their designs.

8.2.4.2 Thermal Considerations

The conversion efficiency of the SRG family is determined largely by the temperature difference between the hot and cold sides of the converter. They must reject waste heat from the Stirling convertor to maintain that difference, usually through the housing, though that heat could be used to heat spacecraft components. Under nominal operating conditions, the SRG would have a housing surface temperature of ~413 K (~140 °C). To maintain the highest possible conversion efficiency, spacecraft thermal designs must consider effects of RPS placement on the spacecraft and use of waste heat on the housing temperature. Heat rejection loops could be mounted on the HPSRG housing as an alternate means to reject heat and thereby maintain cold side sink temperatures for configurations where they could not be maintained otherwise. Note that the 8-GPHS SRG has the same number of GPHS modules as the MMRTG with similar cold end temperatures so the thermal integration should be similar.

SRGs are fueled a maximum of 3 years prior to launch.

8.2.5 Schedule

Table 53 contains details on the High Power SRG development schedule. The HP-SRG TRL is assessed at 2–3. This advanced concept has undergone some conceptual study to determine feasibility. The design has heritage from the ASRG discussed in Section 7.1.

Table 53. Potential High Power SRG project schedule.

SRG TRL level	2-3
Current project milestone	Technology concept has been formulated
Next project milestone	Analytical and experimental proof of concept
Flight System Completion Date	TBR (2020 – 2030)

8.2.6 References and Bibliography

Nuclear Power Assessment Study Final Report, TSSD-23122, Johns Hopkins University Applied Physics Laboratory, Laurel, MD, Feb. 2015. http://solarsystem.nasa.gov/rps/docs/NPAS.pdf

Schmitz, P., Penswick, L., and Shaltens, R., "Stirling Isotope Power System for Stationary and Mobile Lunar Applications," AIAA–2006–4036, Nov. 2007.

Khan, O. et al., "Joint Radioisotope Electric Propulsion Studies – Neptune System Explorer," Nuclear and Emerging Technologies in Space 2011 (NETS-2011), Albuquerque, NM, Paper ID: 3709, Feb. 2011.

Oleson, S. et al. "Kuiper Belt Object Orbiter Using Advanced Radioisotope Power Sources and Electric Propulsion," Nuclear and Emerging Technologies in Space 2011 (NETS-2011), Albuquerque, NM., Paper ID: 3487, Feb. 2011.

8.3 Modular Stirling Radioisotope Generator (MSRG)

8.3.1 Introduction

The Modular Stirling Radioisotope Generator (MSRG) is a notional group of designs for a generator that emphasizes reliability and redundancy while maintaining the high conversion efficiency of Stirling convertors. The MSRG would use Stirling dynamic power conversion technology to convert thermal energy into electrical using many parallel Stirling convertor/controller strings. The MSRG would employ multiple parallel Stirling convertor/controller strings, all of which would share the heat from the GPHS modules. For this design, generators utilizing one to eight GPHS modules were analyzed, which provide 53 to 478 W_e DC to the spacecraft, respectively. Four Stirling convertors would be arranged around each GPHS module (as shown in Figure 28) resulting in from 4 to 32 Stirling/controller strings depending on the number of GPHS modules in the generator. The convertors would be balanced individually, and would be radiatively coupled to the GPHS modules – for this reason this system would only operate in vacuum conditions. Heat would be rejected through the housing/radiator that would be similar in construction to the ASRG. Mass and power analyses for these systems indicate that specific power might be lower than the ASRG. However, the reliability should be significantly increased compared to ASRG. Table 54 summarizes the anticipated performance parameters for each size of notional MSRG, assuming a 4 K (–269°C) thermal sink and BOL thermal output of 244 W_t from each GPHS.

Table 54. Conceptual MSRG Performance Characteristics.

# GPHS	1	2	3	4	5	6	7	8	
CBE Inputs									
BOL (4 K)	53	114	171	235	296	357	410	478	watts
BOM (4 K + BOL + 3 yrs)	51	110	165	227	286	345	396	462	watts
EOM (4 K BOL+17 yrs)	43	94	140	193	243	293	367	393	watts
BOL (270 K)	47	102	153	210	265	320	367	428	watts
BOM (270 K)	46	98	147	203	255	308	353	412	watts
EOM (270 K)	38	82	123	169	213	257	295	344	watts
Degradation Rate	1.16%	1.16%	1.16%	1.16%	1.16%	1.16%	1.16%	1.16%	
Diameter	30	30	30	30	30	30	30	30	cm
Length	13	19	24	30	36	42	48	54	cm
GPHS Heat Load (BOL)*	244	488	732	976	1220	1464	1708	1952	watts
GPHS Heat Load (EOL)	213	427	640	853	1067	1280	1493	1707	watts
Controller Efficiency	93%	93%	93%	93%	93%	93%	93%	93%	
BOL Waste Heat (4 K)	179	358	537	715	894	1073	1252	1431	watts
BOL Stirling Cold End Temperature (4 K)	410	410	410	410	410	410	410	410	K
Average Heat Rejection Temperature (4 K)	400	400	400	400	400	400	400	400	K
Average Heat Rejection Temperature (270 K)	440	440	440	440	440	440	440	440	K
Disturbance Force (@ 100 hz)	10	10	10	10	10	10	10	10	N
BOL Specific Power	2.6	3.1	3.4	3.5	3.55	3.6	3.65	3.68	w/kg
Mass (kg)	21	39	53	69	86	103	118	134	kg
BOL Efficiency	22%	23%	23%	24%	24%	24%	24%	24%	
EOM Efficiency	20%	22%	22%	23%	23%	23%	25%	23%	

** Assumes 244 Wth per GPHS*

8.3.2 Power Conversion Technology

The MSRG would operate on the Stirling thermodynamic cycle, described in Section 2.2.3 – Stirling Conversion Technology.

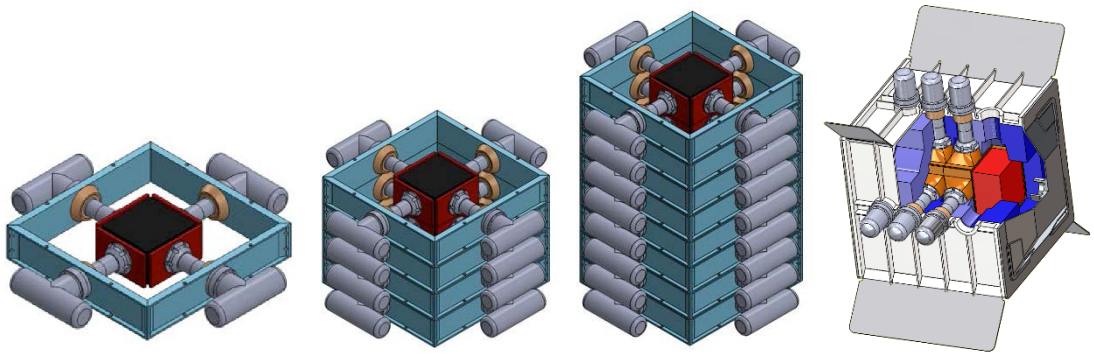

Figure 28. Conceptual GPHS Configurations for the MSRG.

The MSRG's conversion efficiency would depend on the temperature difference between the hot and cold ends of the converters. At nominal vacuum conditions, defined by a 4K sink temperature, and a GPHS fuel loading of ~244 W_t, the MSRG would yield from 53 W_e to 478 W_e at BOL and would degrade at a rate of 1.16% per year, reaching a final EOM output of from 43 W_e to 393 W_e respectively. The MSRG would be robust to Stirling convertor failures. These power estimates conservatively assume that only ¾ of the Stirling convertors for each configuration would be operating due to failures; with a lower failure rate the power output would be higher.

8.3.3 Configuration

Table 55 gives a list of critical subsystems for the MSRG. Due to the low TRL, all configuration descriptions are notional.

Table 55. Critical subsystems for the MSRG concept.

MSRG Subsystem	Functions
General Housing Assembly	Provide structural support and heat rejection path for Stirling convertors; provide attachment sites for the shunt, spacecraft mount, and optional cooling loop.
Space Vehicle Mounting Interface	Attachment between the MSRG and spacecraft. Spacecraft interface plate is incorporated in the MSRG.
Power Shunts	Provides power load if spacecraft bus load is removed. Attaches to the end of the MSRG opposite the mounting interface.
Pressure Relief Device	Punctures a diaphragm allowing atmospheric air to escape the MSRG after launch.
Gas Management Valve	Provides gas system access for withdrawing and back filling the MSRG gas system during storage and ground testing.
GPHS Module	Plutonium-fueled thermal source that provides heat to the hot side of the Stirling convertors.
Thermal Insulation	Covers the GPHS stack (+ endcaps) excluding the Stirling heater heads to ensure that heat is funneled to the hot side of the power convertor.
Stirling Convertor	Single piston/displacer power convertor that converts heat from the GPHS

MSRG Subsystem	Functions
	module to piston motion, which generates AC electric power in a linear alternator
Controller Unit	Each Stirling convertor has a dedicated controller (4 X # GPHS Controllers) with each convertor having the ability to be controlled independently. These dedicated controllers set the stroke of the convertor, rectifies the AC power to DC and makes this data available to the spacecraft, and telemeters MSRG performance data.

8.3.4 System Considerations

The MSRG Stirling convertor design is derived from the current ASC and then assembled into a new generator architecture. Table 56 contains MSRG operational characteristics. Technologies specific to the MSRG development at NASA GRC include: a 25-W_eAC output Stirling convertor with a 2/1 turndown ratio, a single card power controllers and dynamic balancers.

8.3.4.1 Mechanical Considerations

ASRGs rely on opposing phase-synchronized converters to almost entirely cancel the vibration caused by the reciprocating pistons. The MSRG would use either dynamic balancers or dual opposed alternators to reduce vibration. The exact design of those converters is still in development, so details of the MSRG's vibration environment are uncertain but the spacecraft designer should consider some residual vibration in their designs.

8.3.4.2 Thermal Considerations

The conversion efficiency of the SRG family is determined largely by the temperature difference between the hot and cold sides of the converter. They must reject waste heat from the Stirling convertor to maintain that difference, usually through the housing, though that heat could be used to heat spacecraft components. Under nominal operating conditions, the MSRG would have a housing surface temperature of ~140 °C. To maintain the highest possible conversion efficiency, spacecraft thermal designs must consider effects of RPS placement on the spacecraft and use of waste heat on the housing temperature. Heat rejection loops could be mounted on the MSRG housing as an alternate means to reject heat and thereby maintain cold side sink temperatures for configurations where they could not be maintained otherwise. Note that the MSRG would have similar cold end temperatures to the MMRTG so the thermal integration should be similar albeit at a lower heat load.

MSRGs would be fueled a maximum of three years prior to launch.

Table 56. Conceptual MSRG operating characteristics.

Parameter	MSRG Value	Comments
Radiation tolerance	50 krad (Si) behind 60 mil aluminum shielding	Radiation tolerance driven by controller, assumed to be similar to the ASRG controller
Heat rejection requirement	179 to 1431 W_t [BOL]	From 1 to 8 GPHS using 244W_t per GPHS module
Cold side temperature	410 K (137°C)	Convertor Cold End Temperature
Hot side temperature	1033 K (760°C)	Convertor Hot End Temperature
Dimensions	Diameter = 30 cm X 13 to 54 cm	From 1 to 8 GPHS
RPS vibration	<10 N @ ~ 100 Hz	Vibration is still uncertain but should be similar to ASRG
G-loading limit	TBR	
Acoustic loading limit	TBR	

8.3.5 Schedule

Table 57 contains details on the MSRG development schedule. The MSRG TRL is assessed at 2–3. This advanced concept has undergone some conceptual study to determine feasibility.

Table 57. Modular SRG project schedule.

MSRG TRL level	2–3
Current project milestone	Technology concept has been formulated
Next project milestone	Analytical and experimental proof of concept
Flight System completion date	TBR (2020 – 2030)

8.3.6 Bibliography

Schmitz, P. C., Mason, L. M., Schiefer, N., "Modular Stirling Radioisotope Generator," AIAA Power and Propulsion Forum, Orlando, FL, July 2015.

9 Appendix E - Radioisotope Heater Unit

9.1 Introduction

Radioisotope heater units (RHUs) can be used to provide thermal energy (heat) for spacecraft components when it is not feasible to use solar heating or electrical heaters. RHUs generate heat without electronic components or moving parts via decay of Pu-238, so they are highly reliable and provide nearly constant heat due to the slow decay of Pu-238. But because they cannot be deactivated, applications that involve a wide range of thermal dissipation or variation in environmental incident energy could lead to overheating concerns. To address this concern, Variable Radioisotope Heater Units (VRHUs) were developed prior to the Cassini mission. VRHUs enable temperature control by providing needed heat up to its maximum output, and radiating any excess heat to space.

RHUs have an extensive, 30-year flight history, and are a mature and successful technology. RHUs were first used on Apollo 11 (1969), where two 15-W_t RHUs were used in the Early Apollo Scientific Experiment Package. Each of the two Pioneer missions (1973, 1975) included 12 one-W_t Pioneer Radioisotope Heater Units (PRHUs). Both Voyager missions (1977) included RHUs. The Galileo mission (1989) used 120 one-Wt Light-Weight Radioisotope Heater Units (LWRHUs), which was a new design for the RHU with increased containment for the Pu-238 fuel and lower mass than the previous RHU designs. Cassini (1997) carried 117 RHUs, some of which were used in Variable Radioisotope Heater Unit (VRHU) configurations. The Sojourner rover (1996) and Mars Exploration Rovers (2003), though powered by solar panels, used RHUs for component heating. RHU parameters and values are listed in Table 58.

Table 58. Top-level RHU parameters.

Parameter	RHU Value
System mass	40 g
Dimensions	0.032 m length, 0.026 m diameter
Heat generated	1 W_t
Pu-238 mass	1.9 g
Operating environments	Vacuum, atmosphere
System Lifetime	>14 years

9.2 Configuration

LWRHUs consist of three main components: the radioisotope fuel pellet encased in a platinum-rhodium alloy “clad,” graphite insulation, and a graphite aeroshell to provide a thermal shield to protect the fuel in case of a spacecraft failure leading to fire or reentry; see Figure 29.

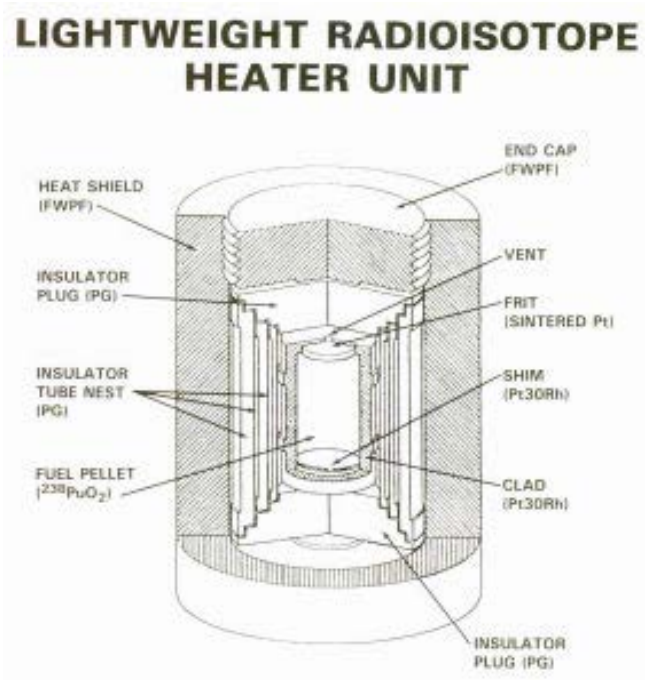

Figure 29. Conceptual STEM-RTG configurations based on 4 GPHS module stackable segment design.

The VRHU consists of up to three LWRHUs encased in a cylindrical RHU holder. Half of the RHU holder is coated in a high-emittance thermal paint, while the other half is covered by an aluminized Kapton multilayer insulation (MLI) blanket. As shown in Figure 30, the RHU holder rotates on bearings and is driven by a temperature-sensitive bimetallic spring, exposing the high-emittance surface towards to the spacecraft when heating is required, or towards space when heating is not required. The bimetallic spring can be calibrated such that this rotation occurs at the temperature range required for the particular application.

While there have not been any VRHU failures in Cassini, the design used three LWRHUs for redundancy. A failure of one RHU to rotate was acceptable in the Cassini VRHU design.

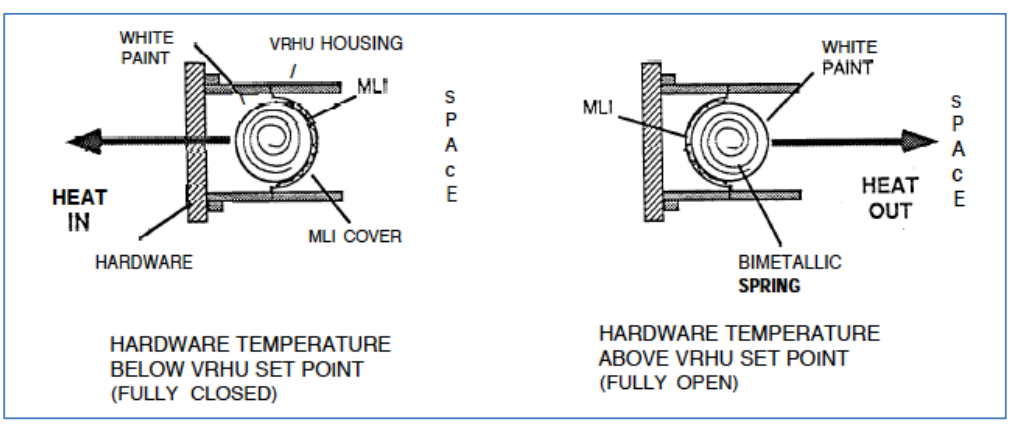

Figure 30. Variable Radioisotope Heater Unit concept.

9.3 System Considerations

RHUs have a wide range of useful applications. In general, they can be used in place of electrical heaters to save electrical power. They can be clustered to provide sufficient heat when a single unit is insufficient. However, as with all radioisotope systems, RHUs must be integrated with the spacecraft at the launch facility due to hazardous material constraints, so the spacecraft must be designed to accommodate RHU integration at the launch facility. The LWRHU has no moving parts or electronic components, and thus is very reliable over long periods.

Missions proposing to use LWRHUs generally would require a National Environmental Policy Act (NEPA) process, which would add cost to any such mission development.

9.4 Programmatic Considerations

The RHU is a TRL 9 technology that has flown on space missions since 1969. Along with extensive flight heritage, RHUs have also been tested rigorously on the ground for severe accident scenarios, and have been found to be extremely reliable. RHUs have been used for a wide variety of mission applications to keep critical components and instruments warm, and are particularly suited to cases where electrical power availability is limited.

9.5 References

Bennet, G.L., "Mission Interplanetary: Using Radioisotope Power to Explore the Solar System," *Energy Conversion and Management*, Vol. 49, 2008, pp. 382–392.

Lyra, J.C., and Stultz, J. W., "The Variable Radioisotope Heater Unit for the Cassini Spacecraft," *SAE Transactions*, Vol. 103. pp. 539–547. 1995.

"Radioisotope Heater Units (RHUs), factsheet, Department of Energy, Dec. 1998. http://saturn.jpl.nasa.gov/spacecraft/safety/rhu.pdf

10 Appendix F - Acronyms and Abbreviations

ACS	Active Cooling System
AO	Announcement of Opportunity
ASC	Advanced Stirling Converter
ASRG	Advanced Stirling Radioisotope Generator
ATEC	Advanced Thermoelectric Converter
BOL	beginning of life
BOM	Beginning of Mission
BPCU	Brayton Power Conversion Unit
BRU	Brayton Rotating Unit
CTE	critical technology element
DOE	Department of Energy
EDL	entry, descent, and landing
EELV	Evolved Expendable Launch Vehicle
EIS	Environmental Impact Statement
EJSM	Europa Jupiter Science Mission
EMI	electromagnetic interference
eMMRTG	Enhanced Multi-Mission Radioisotope Thermoelectric Generator
EODL	end of design life
EOM	End of Mission
FPSE	Free Piston Stirling Engine
GMV	gas management valve
GPHS	General Purpose Heat Source
GPHS-RTG	General Purpose Heat Source Radioisotope Thermoelectric Generator
GRC	Glenn Research Center
HDB	heat distribution block
HEPA	high-efficiency particulate arrestance
HPSRG	High Power Stirling Radioisotope Generator
HTTMS	High Temperature Thermal Management System
ITTMS	Intermediate Temperature Thermal Management System
JIMO	Jupiter Icy Moons Orbiter

LTTMS	Low Temperature Thermal Management System
LWRHU	Low Weight Radioisotope Heater Unit
MHW-RTG	Multi-Hundred Watt Radioisotope Thermoelectric Generator
MLI	multi-layer insulation
MMRTG	Multi-Mission Radioisotope Thermoelectric Generator
MSL	Mars Science Laboratory
MSRG	Modular Stirling Radioisotope Generator
NASA	National Aeronautics and Space Administration
NEPA	National Environmental Policy Act
NSPO	Nuclear Space Power Office
PO	Purchase Order
PPA	(Radioisotope Power System) Program Planning and Assessment (Office)
PRD	pressure relief device
PRHU	Pioneer Radioisotope Heater Unit
PRT	platinum resistance thermometer
PV	photovoltaic
RHESSI	Ramaty High-Energy Spectroscopic Imager
RHU	Radioisotope Heater Unit
RPS	Radioisotope Power System
RTG	Radioisotope Thermoelectric Generator
RTPV	Radioisotope Thermovoltaic (Generator)
SBIR	Small Business Innovation Research
SDU	shunt dissipator unit
SKD	skutterudite
Skutterudite	a cobalt arsenide mineral that has variable amounts of nickel and iron substituting for cobalt with a general formula: $(Co,Ni,Fe)As_3$
SNAP	Systems for Nuclear Auxiliary Power
SRG	Stirling Radioisotope Generator
SRS	shock response spectrum
STEM-RTG	Segmented Thermoelectric & Modular RTG
TAGS	tellurides of antimony, germanium, and silver
TBR	to be released
TE	thermoelectric
TEC	Thermal Electric Converter

TESI	Teledyne Energy Systems, Incorporated
TPV	thermophotovoltaic
TRL	technology readiness level
VCHP	variabable conductance heat pipe
VRHU	Variable Radioisotope Heater Unit
W_e	watts electrical
W_t or W_{th}	watts thermal
Zintl	compound made up of a rare earth/alkaline earth or alkali metal and/or a transition metal and/or metalloid (e.g. Sb and As)