JPL Publication 16-1

Archived 1976–1985 JPL Aircraft SAR Data

Thomas W. Thompson
Ronald G. Blom
Jet Propulsion Laboratory

National Aeronautics and
Space Administration

Jet Propulsion Laboratory
California Institute of Technology
Pasadena, California

January 2016

JPL Publication 16-1

Archived 1976–1985 JPL Aircraft SAR Data

Thomas W. Thompson
Ronald G. Blom
Jet Propulsion Laboratory

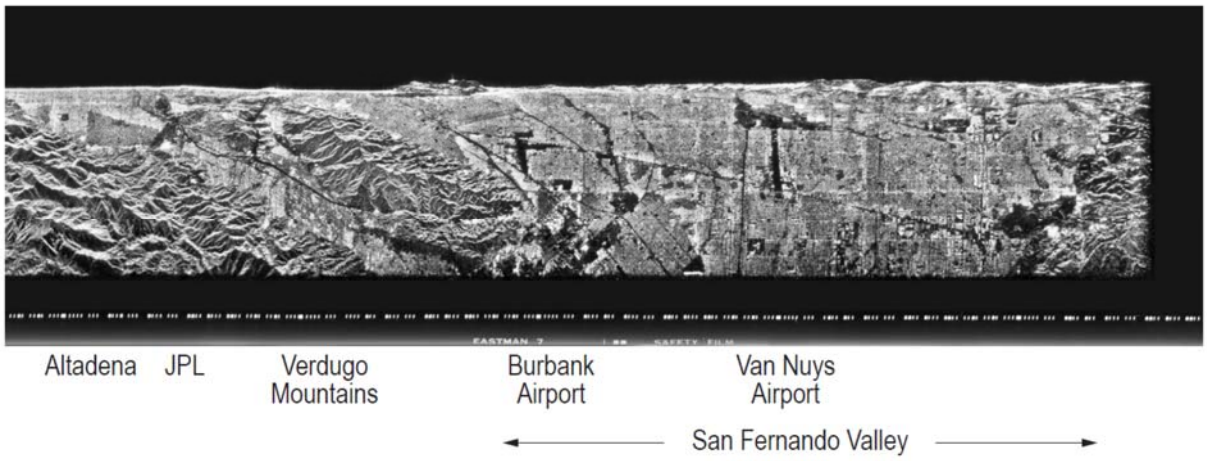

National Aeronautics and Space Administration

Jet Propulsion Laboratory
California Institute of Technology
Pasadena, California

January 2016

Title page image: Optical aircraft SAR imagery of Southern California—Altadena/Jet Propulsion Laboratory to western San Fernando Valley

This research was carried out at the Jet Propulsion Laboratory, California Institute of Technology, under a contract with the National Aeronautics and Space Administration.

Reference herein to any specific commercial product, process, or service by trade name, trademark, manufacturer, or otherwise, does not constitute or imply its endorsement by the United States Government or the Jet Propulsion Laboratory, California Institute of Technology.

© 2016 California Institute of Technology. Government sponsorship acknowledged.

Acknowledgments

All of us involved with JPL aircraft and spacecraft radars are deeply indebted to Walter E. Brown for his insight and perseverance that resulted in the radars that have led to JPL's prominence in radar remote sensing since the 1970s. Also, all of this was made possible by the superb support of the NASA Ames Airborne Science Program.

Significant contributions to this archiving effort were supplied by Ravi Campbell, who assisted in the labeling of the data, Julie Cooper, Camille E. Mathieu, and Kristin DeAnfrasio of the JPL Archives, as well as by Roger Carlson and Eugene Ustinov, who assisted in the preparation of this document.

In memory of Rolando Jordan, long-time JPL Radar System Engineer, who passed away during the preparation of this document. Rolando was a key contributor to JPL radar developments from the earlies 19660s Aerobee radar experiments to the present.

Table of Contents

Acknowledgments ..... **iv**
Foreword ..... **vi**
1. Introduction **1**
2. Overview— JPL Aircraft Radar Expeditions in the 1970s and 1980s **3**
3. End-to-End System Overview **5**
3.1. Preflight Operations 5
3.2. Real-Time Operations 7
3.3. Post-Flight Data Processing 9
4. The Johnson Space Center (JSC) X-Band Data Acquisitions **10**
5. Summary **11**
References **11**
Acronyms **12**
Appendix A – AIDJEX and ASSESS **13**
Appendix B – Details of the Aircraft SAR Data Collection, 1976–1985 (JPL Archives) **14**

Figures

Figure 1. National Aeronautics and Space Administration (NASA) Ames Airborne Laboratory, the prototype CV-990 commercial aircraft acquired by NASA and converted by NASA Ames Research Center to the Airborne Science Laboratory, a platform for radar and optical experiments. vi
Figure 2. Typical optically processed aircraft SAR imagery- Cima volcanic field, southeastern California. 4
Figure 3. Overview of end-to-end aircraft SAR operations. 5
Figure 4. JPL aircraft SAR geometry – designating sites for flight planning. 6
Figure 5. Overview of JPL Aircraft SAR real-time and subsequent processing. Real-time operations produced the signal film, which was subsequently processed (correlated) to optical images. In the mid-1980s there was a transition to digital recording and processing that is shown here by the dashed lines. 7
Figure 6. Physical layout of the JPL Aircraft SAR. 7
Figure 7. Detailed Overview Radar Equipment associated with JPL Aircraft SAR on the Aircraft. 8
Figure 8. Overview of post-flight optical processing. 9
Figure 9. Detailed overview of post-flight optical processing. 9
Figure 10. Johnson Space Center Earth Resources WB-57 Canberra aircraft used for the JSC X-band data acquisitions. 10

Tables

Table 1. Summary of optical SAR data transferred to the JPL Archives. 2
Table 2. Radar parameters, based on those used in 1984 and 1985 (Thompson, et al., 1986)...4

Foreword

This report describes archived data from the Jet Propulsion Laboratory (JPL) aircraft radar expeditions in the mid-1970s through the mid-1980s collected by one of us (RGB). These JPL synthetic aperture radar (SAR) data were recorded optically on long strips of film. SAR imagery was produced via an optical, holographic technique that resulted in long strips of film.

Figure 1. National Aeronautics and Space Administration (NASA) Ames Airborne Laboratory, the prototype CV-990 commercial aircraft acquired by NASA and converted by NASA Ames Research Center to the Airborne Science Laboratory, a platform for radar and optical experiments.

1. Introduction

There were four significant successful Jet Propulsion Laboratory (JPL) Synthetic Aperture Radar (SAR) projects in the 1970s and 1980s:

1. The Apollo-17 Lunar Radar Sounder in 1972 (Phillips et al., 1973a, b)
2. The JPL Aircraft Radar expeditions in the early 1970s through the 1980s (Blom and Elachi, 1981; Evans et al., 1986; Thompson et al., 1986; Weissman, King and Thompson, 1979)
3. The Seasat SAR mission in 1978 (Blom and Elachi, 1981; Elachi, 1980; Jordan, 1980; Logan, et al., 2014)
4. The Spaceborne Imaging Radar (SIR) missions – SIR-A in 1981, SIR-B in 1984, and SIR-C in 1994 (Elachi, 1982)

The JPL aircraft radar expeditions provided valuable experience in the geologic interpretation of terrestrial data from the Seasat and SIR space missions. Also, this aircraft radar operated at the L-band frequency of 1225 MHz (25-cm wavelength) as it was recognized that this would be the optimum frequency/wavelength for orbital radar observations of Venus. This choice of frequency/wavelength choice was indeed used by the Magellan Radar Mission. (Saunders, et. al., 1992) in 1990–1994. All these 1970s and 1980s SAR accomplishments evolved from Walter Brown's Aerobee Rocket Radar Project in the 1960s (Brown, 1969).

Key users of this data in the 1970s and 1980s included Charles Elachi, Diane Evans, Tom Farr, John Ford, Mike Kobrick, and Ladislav Roth who used this data for a number of oceanographic and geologic studies. Operations and maintenance of the radar were supported by Walter Brown, Bob Blakely, Ed Caro, Jim Granger, Bill Fiechter, Jodie Gilstrap, Rolando Jordan, Elmer McMillan, Tim Miller, Mimi Paller, Gene Samuel, and Walter Skotnicki. Processing and distribution of the data was supported by Tom Anderson, Tom Bicknell, Don Harrison, Annie Richardson, and Sylvester Scott.

As noted above, this report describes data from the JPL aircraft radar expeditions in the early 1970s through the 1980s collected by one of us (RGB). These data were collected during his career at JPL from the 1970s through 2015. SAR data in the 1970s and 1980s were recorded optically on long strips of film. SAR imagery was produced via an optical holographic technique that resulted in long strips of film imagery. Table 1 provides a summary of the optical SAR data transferred to the JPL Archives in 2015. The data were recovered in six boxes, labeled A through G. Each box contained 3, 4, or 5 series of flights, identified in the table as a subset/expedition. For each expedition there were several flights. The expeditions within each box are ordered more or less chronologically. The start and end date for each series of flights/expedition is a six-digit number, where the first two digits designate the year, the middle two digits are the month, and the last two digits are the day of month. For example, 760421 is April 21, 1976.

Appendix A provides a description of the large multinational, multi-platform Arctic Ice Dynamics Joint Experiment (AIDJEX), and he Airborne Science Shuttle Experiments Systems Simulations (ASSESS) that was conducted by the NASA Ames Airborne Science Program. The JPL Aircraft SAR Team participated in these experiments in 1976 and 1977. Appendix B provides a detailed description of the data in the JPL archives.

Table 1. Summary of optical SAR data transferred to the JPL Archives.

Box	Subset	Rolls	Expedition	Start	End
Box A - AIDJEX / ASSESS / Joint JPL-French Experiment / Hurricane ‘76					
A	1	1 to 7	Arctic Ice Dynamics Joint Experiment	760421	760426
A	2	8 to 17	ASSESS	770521	770626
A	3	18 to 21	Joint JPL French Experiment	790719	790723
A	4	22 to 33	Hurricane ‘76	760817	761003
Box B - Winter ‘84/Summer-Fall ‘84/Spring ‘85					
B	1	1 to 7	Winter ‘84	840217	840306
B	2	8 to 18	Summer-Fall ‘84	840816	841112
B	3	19 to 30	Spring ‘85	850314	850618
Box C - AIDJEX ‘76/ Winter Experiment-‘77 / Geology '78/ Guatemala/ Alaska '78					
C	1	1 to 3	AIDJEX	760402	760409
C	2	4 to 8	Winter Experiment	770308	770320
C	3	9 to 26	Geology '78	780330	78520
C	4	27 to 35	Guatemala (Geology '78)	780414	780420
C	5	36 to 39	Alaska '78	780630	780713
Box D - Geology '78 / Hurricane II ‘77 / Summer '82 / Summer '83					
D	1	1 to 5	Geology '78	770906	771025
D	2	6 to 15	Hurricane II ‘77	770809	771031
D	3	16 to 19	Hurricane II ’77 Extra Rolls	770825	771025
D	4	20 to 25	Summer '82 Flights	820610	820726
D	5	26 to 29	Summer '83 Flights	830811	830916
Box E – Geology ‘80 / Summer ‘84 / Summer ‘85					
E	1	1 to 7	Geology ‘80	800804	800924
E	2	8 to 12	Summer ‘84	840816	841107
E	3	13 to 26	Summer ‘85	850308	850713
Box F - Guatemala for Walter Brown - 1977, 1978, 1980					
F	1	1	Hurricane II - Guatemala - 1977 (1 Roll)	771024	771025
F	2	2 to 14	Guatemala - 1978	780414	780420
F	3	15	Guatemala - 1980 (1 Roll)	800801	800801
Box G - Extra Data (780520) / Winter ‘79 / JSC X-Band ‘79-‘81					
G	1	1	Extra Data - 780520 (one roll)	780520	780520
G	2	2 to 5	Winter ‘79	790306	790307
G	3	6 to 14	JSC X-Band – ‘79	790426	790907
G	4	15 to 14	JSC X-Band – ‘80	800707	800911
G	5	6 to 14	JSC X-Band – ‘81	810309	810827

Appendix B describes the data in the JPL archives on a roll-by-roll basis.

2. Overview— JPL Aircraft Radar Expeditions in the 1970s and 1980s

The JPL aircraft SAR expeditions in the 1970s and 1980s were implemented by using the NASA Ames Airborne Science Laboratory, a commercial Convair-990 (CV-990) aircraft that NASA Ames Research Center acquired from Consolidated Vultee (Convair) when this company abandoned its commercial aircraft business in the early 1970s. NASA Ames' Airborne Science Branch converted this CV-990 aircraft to an airborne laboratory that provided a platform for the JPL Aircraft SAR expeditions as well as for other experiments. In particular, the JPL Aircraft SAR was operated annually using this platform. JPL radar engineers mounted their equipment in and on the aircraft. For a typical CV-990 expedition season, there could be a dozen or so experiments. Typical JPL Aircraft SAR deployments were typically one to two months long.

This provided the means whereby the JPL Aircraft Radar Group could validate SAR techniques. The control and recording elements were mounted in the cabin, where they could be operated in a shirt sleeves environment. Transmitters and receivers were mounted in the baggage compartment. The antenna was mounted on a spare baggage compartment door that enabled an easy installation. The CV-990 was typically flown at 20,000 feet up to usual commercial jet altitudes of 30,000 to 36,000 feet. Table 2 provides the radar parameters, based on those used in 1984 and 1985 (Thompson et al., 1986).

As noted above, the JPL Aircraft SAR data in the 1970s and 1980s were recorded optically on long strips of film. SAR imagery was produced via an optical, holographic technique that resulted in long strips of film imagery like that shown in Figure 2. Here, radar reflectivity is shown in different tones of grey from white to black. Brightest reflections, shown as white, are associated with terrain favorably tilted toward the radar, and structures aligned parallel to the aircraft. Weakest radar reflections shown as black, e.g., those before the nadir trace, sloped areas tilted away from the aircraft, and the smooth areas associated with airports. These are displayed vertically in slant range (the distance to the reflector from the aircraft) and horizontally as the azimuth (the distance along the aircrafts ground track). Typical optical SAR data are on 70-mm film rolls that are several feet long.

The production of optically processed aircraft SAR data ended abruptly on the afternoon of July 17, 1985 when the JPL aircraft radar and the Airborne Science Laboratory were destroyed in a fire. The aircraft tires exploded during the takeoff roll, shrapnel from a metal tire rim penetrated the right-wing fuels tanks, and shortly thereafter, the entire aircraft was engulfed in a fire. The aircraft radar was rebuilt and the CV-990 aircraft was replaced by a DC-8 aircraft obtained from Braniff airlines. Many more aircraft radar expeditions were conducted in the latter half of the 1980s into the 1990s. These produced digital imagery described by Thompson, et al. (1986). Key personnel involved with this rebuilding of the JPL aircraft SAR were Walter Brown Jr. Mike Kobrick, John McCluskey, Tim Miller, Yunling Lou, Mimi Paller, Gonzalo Romero, Tak Sato, Kevin Wheeler, Key personnel involved with production and distribution of data from rebuilt aircraft SAR were Richard Carrande, Anhua Chu, Leon Maldonado, and Michelle Vogt. The last AIRSAR flight on the NASA Ames DC-8 aircraft was in December 2004.

Table 2. Radar parameters, based on those used in 1984 and 1985 (Thompson, et al., 1986).

Parameter	Value
Frequency (L-Band/X-Band)	1225 MHz / 7930 MHz
Wavelength (L-Band/X-Band)	24.6 cm / 3.8 cm
Pulse Length	4.9 μs
Bandwidth	19.3 MHz
Transmitted Polarizations	Horizontal (H) and Vertical (V)
Received Polarizations	HH, HV, VV, VH
Nominal Altitude	20,000 – 40,000 ft
Nominal Velocity	400 – 500 kts
Look Angle Range	0 – 60°
Optical Sweep Time	55 μs

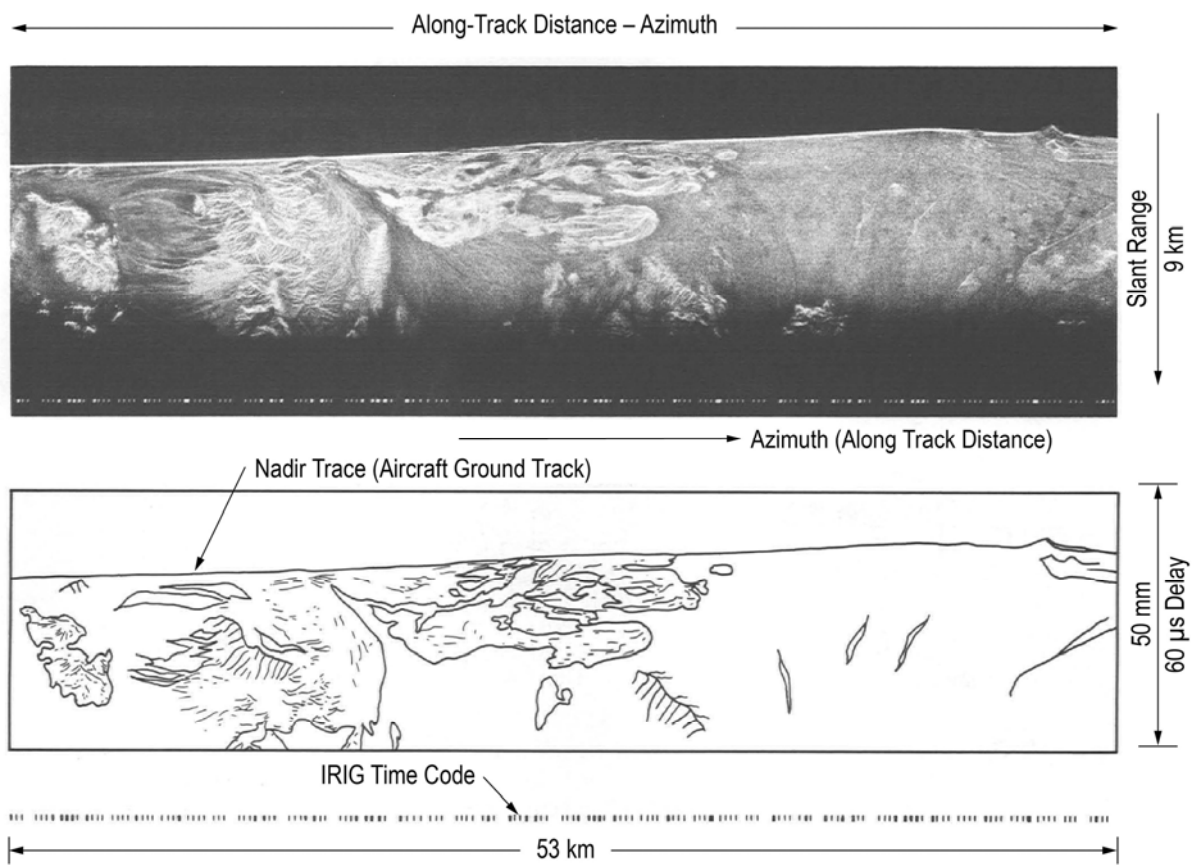

Figure 2. Typical optically processed aircraft SAR imagery- Cima volcanic field, southeastern California.

3. End-to-End System Overview

JPL Aircraft SAR operations, as shown in Figure 3, were conducted in three phases:

- Pre-flight planning,
- Real-time operations, and
- Post-flight processing.

Preflight planning consisted of collecting user inputs for sites to be observed. User inputs in the form of sites were used by the NASA Ames Research Center navigators to generate flight plans and by the radar operators for real-time operations. Real-time operations consisted of conducting the flights and performing the radar observations based on flight plans that were generated the day before. Outputs of the real-time operations were the optical signal films and the radar logs. Commencing in mid-1980s, the JPL Aircraft SAR also produced digital signal recordings in the form of high-density digital tapes (HDDTs). Post-flight processing consisted of the production of imagery. The present report covers the optical SAR data.

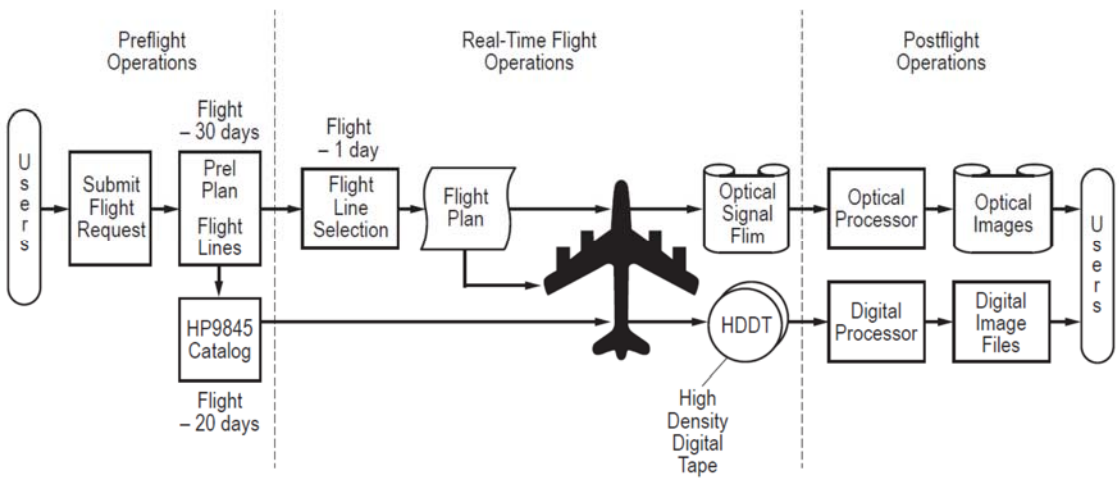

Figure 3. Overview of end-to-end aircraft SAR operations.

3.1. Preflight Operations

Figure 4 is an overview of the JPL Aircraft SAR geometries used for pre-flight and real-time operations. Sites were designated by a site latitude and longitude, a heading, an angle of incidence for the center of the site, and by a start and end waypoints. These parameters were specified well before a flight and were used for flight planning by the NASA Ames CV-990 navigators as well as for radar operations during the flights.

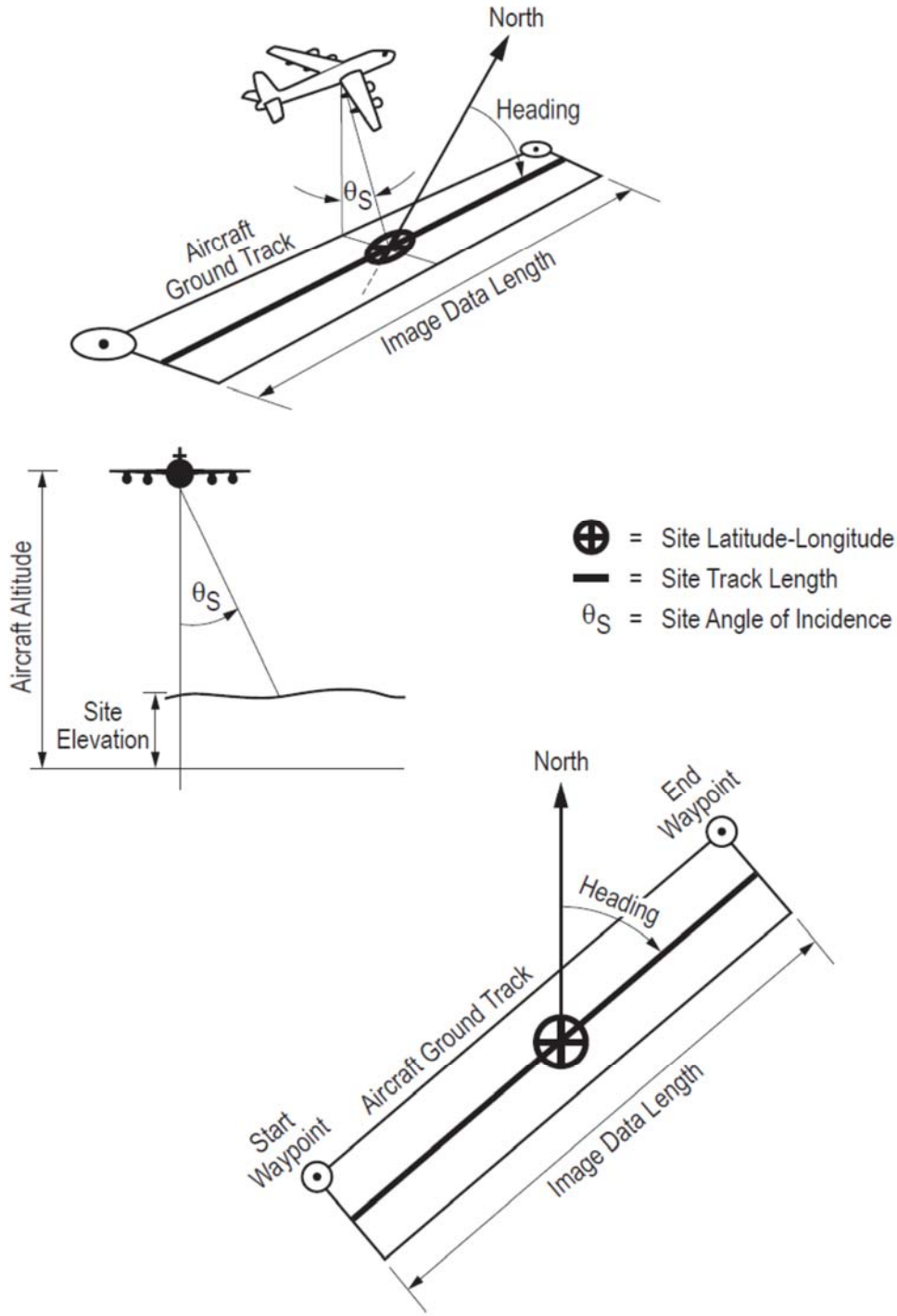

Figure 4. JPL aircraft SAR geometry – designating sites for flight planning.

3.2. Real-Time Operations

Figures 5, 6, and 7 provide an overview of real-time operations and radar equipment used during the acquisition of the raw optical data. Figure 5 shows how the real-time radar echoes were recorded optically on a signal film – vertically in slant range (the distance to the reflector from the aircraft) and horizontally as the azimuth (the distance along the aircrafts ground track). As noted above, there was a transition in the 1980s from optical recording and correlation to digital recording and correlation, this report only addresses the optical recording and correlation.

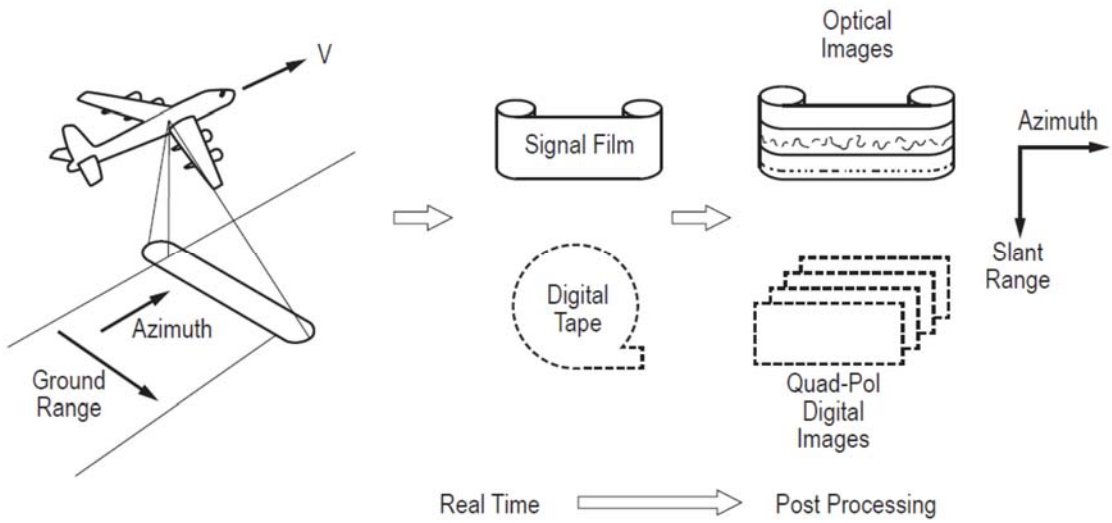

Figure 5. Overview of JPL Aircraft SAR real-time and subsequent processing. Real-time operations produced the signal film, which was subsequently processed (correlated) to optical images. In the mid-1980s there was a transition to digital recording and processing that is shown here by the dashed lines.

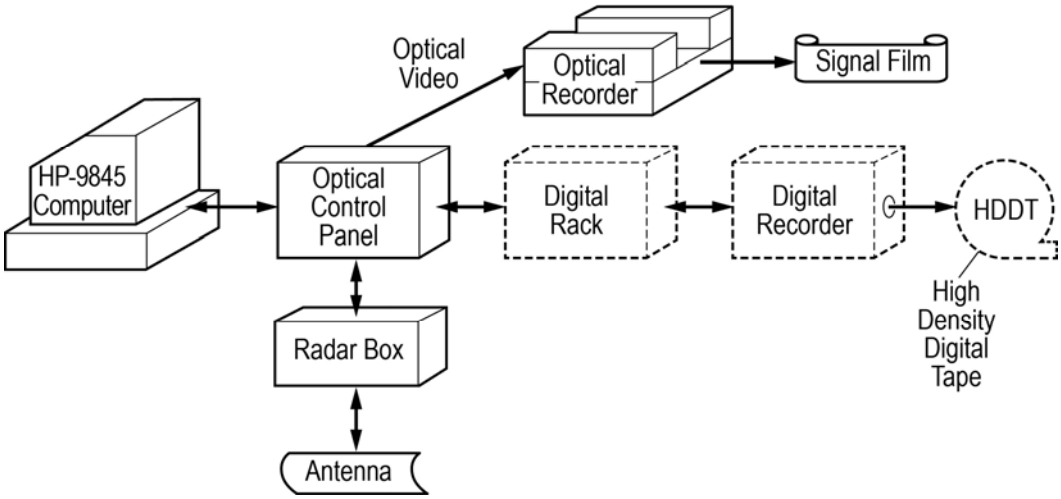

Figure 6. Physical layout of the JPL Aircraft SAR.

Figure 6 provides an overview of the physical layout of the JPL Aircraft SAR as it was installed in the aircraft. The radar box generated high power radar pulses that were routed to the antenna.

Radar echoes detected with the same antenna were routed to the radar box where they were subsequently amplified and recorded on the optical and digital recorders. The radar box was located in the baggage compartment, and the antenna was mounted on baggage compartment door. Circuitry for generating radar commands and recording echoes was controlled by an optical control panel located on the main floor of the aircraft. The optical control panel, in turn, was controlled by an HP-9845 desktop computer. In 1984 and 1985, raw digital data were recorded via a digital rack and high density digital recorder onto high-density digital tapes (HDDTs).

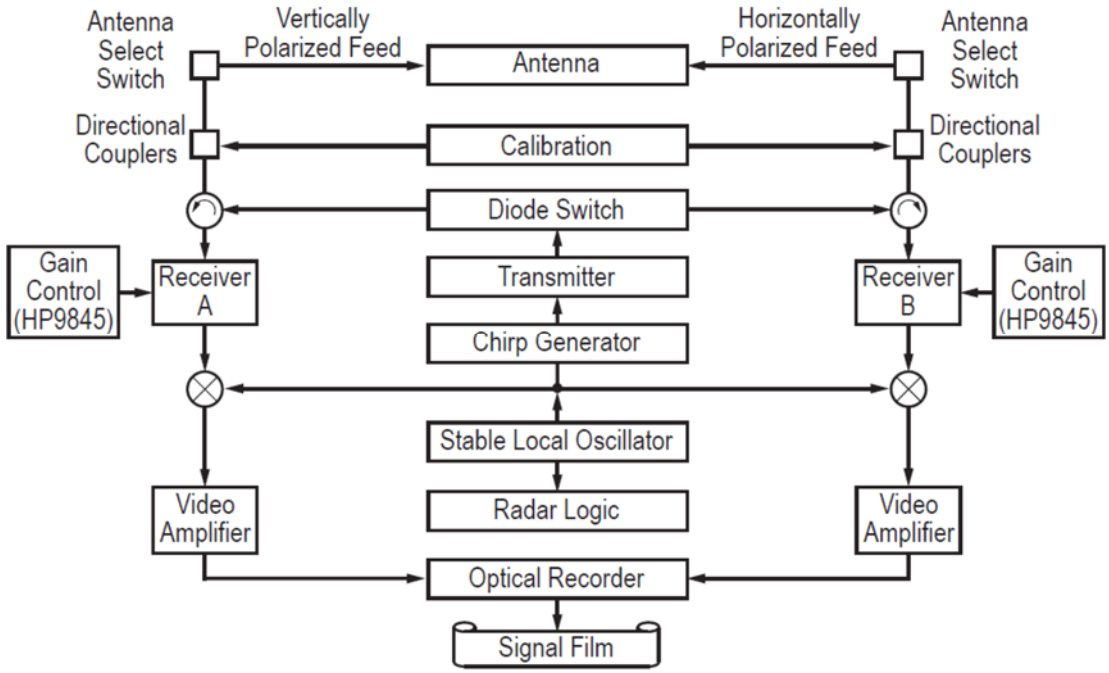

Figure 7. Detailed Overview Radar Equipment associated with JPL Aircraft SAR on the Aircraft.

Figure 7 provides a more detailed overview of the radar as it was operated onboard the aircraft. A key element is the stable local oscillator (STALO) that provided a high-fidelity frequency tone for the radar pulses, as well, as overall radar timing. Transmitted pulses were generated in a chain consisting of STALO, chirp (radar pulse) generator, transmitter high-power amplifier and diode switch that routed to the horizontally or vertically polarized antenna feeds. Radar echoes were received through a chain from the horizontally or vertically polarized antenna feeds to the radar receivers A and B, then to the video amplifiers, and ending at the optical recorder. Gain control by the HP9845 computer included the capability of adjusting echo strength as a function of range via sensitivity time control (STC). Here, echoes were modulated on a microsecond-by-microsecond basis via empirical estimations of echo power for three nominal surfaces (smooth, medium, rough) The output of this receiver chain was the signal film, which, in turn, returned after the flight for processing on optical correlators at JPL.

3.3. Post-Flight Data Processing

Figures 8 and 9 illustrate the post-flight processing via optical correlation. Figure 8 shows the chain of optical correlation processing from the optical signal film recorded in-flight to optical image film (referred to as negatives), and then to strip contact prints (referred to as positives). Most of the positive prints are in the form of paper prints; with a few positive prints being in the form of positive transparencies.

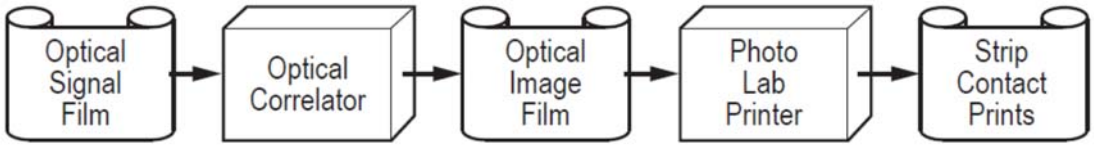

Figure 8. Overview of post-flight optical processing.

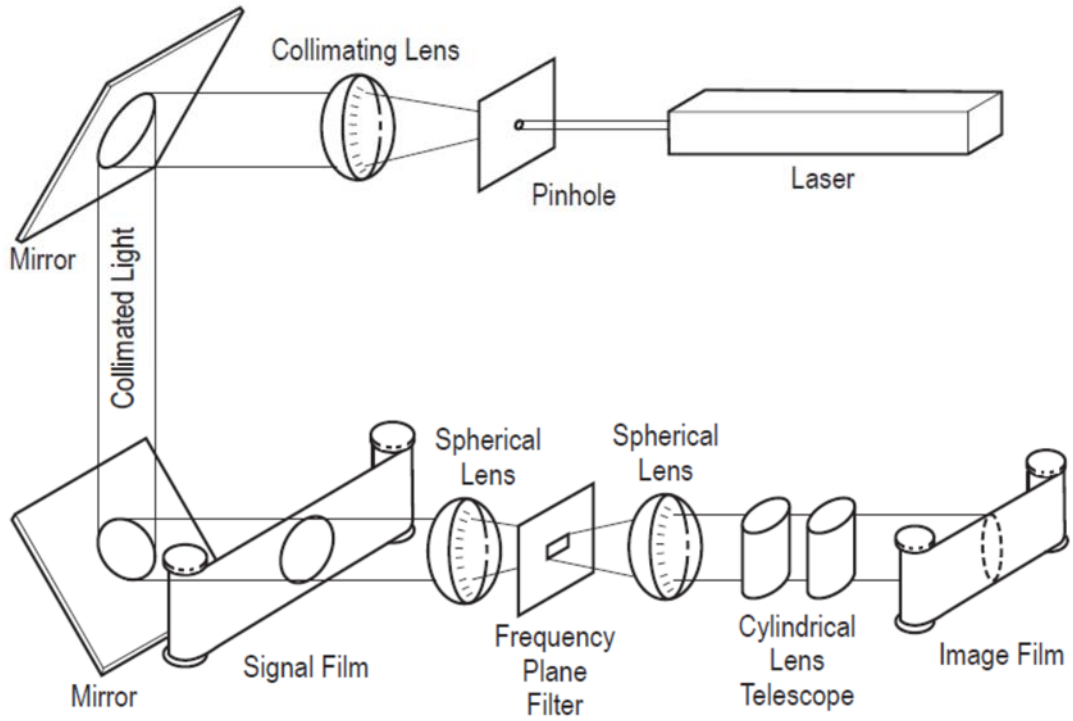

Figure 9. Detailed overview of post-flight optical processing.

Figure 9 provides a more detailed overview of the post-flight processing via optical correlation. A laser beam was directed onto a pinhole followed by a collimating lens that created a collimated coherent light beam used to illuminate the signal film. The light transmitted through the signal film is focused via a series of spherical and cylindrical lenses to form a radar image on the film. A frequency-plane filter enabled the processing to select frequency bands.

4. The Johnson Space Center (JSC) X-Band Data Acquisitions

A number of data acquisitions by this JSC X-band system are in the archived data collection. In 1979, 1980, and 1981, the aircraft X-band SAR data were acquired for a number of geologic sites via a system flown by JSC's Earth Resources Branch using a converted WB-57 Canberra aircraft shown in Figure 10. This X-Band SAR system was likely operated by Goodyear or derived from the Goodyear radar. Commencing in 1951, Goodyear Aircraft Company played a key role in numerous SAR firsts. These included the original SAR patent and the first commercial SAR. The company has flown more than 500 individual SAR systems on more than 30 different types of aircraft for numerous countries throughout the world.

Figure 10. Johnson Space Center Earth Resources WB-57 Canberra aircraft used for the JSC X-band data acquisitions.

5. Summary

As noted above, this report describes data from the JPL aircraft radar expeditions in the early 1970s through the mid-1980s that were collected by one of us (RGB) from the mid-1970s through the mid-1980s. SAR data in this period were recorded optically in real time on long strips of film. SAR imagery was produced via an optical, holographic technique that resulted in long strips of film imagery. The JPL aircraft radar expeditions provided valuable experience in the geologic interpretation of terrestrial data from the Seasat and SIR space missions.

References

R. Blom and C. Elachi, “Spaceborne and Airborne Imaging Radar Observations of Sand Dunes,” *j. Geophys. Res. – Solid Earth*, vol. 86, iss. B4, 1981, pp. 3061–3073.

W.E. Brown, Jr., “Radar Studies of the Earth,” *Proc. of the IEEE*, vol.57, no. 4, 1969, pp. 612–620.

C. Elachi, "Spaceborne Imaging Radar: Geologic and Oceanographic Applications," *Science*, vol. 209, no. 4461, 1980, pp. 1073–1082.

C. Elachi, “Shuttle Imaging Radar Experiment,” *Science*, vol. 218, no. 4576, 1982, pp. 996–1003.

D.L. Evans, et al., “Multipolarization Radar Images for Geologic Mapping and Vegetation Discrimination,” *IEEE Trans. on Geoscience and Remote Sensing*, vol. GE-24, no. 2, 1986, pp. 246–257.

R.L. Jordan, “The SEASAT-A Synthetic Aperture Radar System,” *IEEE Journal on Oceanic Engineering* (Special Issue on SEASAT-1 Sensors), vol. 5, no. 2, 1980, pp. 154–164.

T. Logan, B. Holt, and L. Drew, “The Newest Oldest Data from Seasat’s Synthetic Aperture Radar,” *EOS, Transactions, AGU*, vol. 95, no. 11, 2014, pp. 93–94.

R.J. Phillips, et al., “The Apollo 17 Lunar Sounder,” *Proceedings of the Fourth Lunar Science Conference* (Supplement *for Geochimica et Cosmochimica Acta*), vol. 3, 1973, pp. 2821–2831.

R.J. Phillips et al. “Apollo Lunar Sounder”, Chapter 22, *Apollo 17 Preliminary Science Report*, NASA Scientific and Technical Information Office, 1973.

R.S. Saunders, et al., “Magellan Mission Summary,” *J. Geophys. Res.*, vol. 97, no. E8, 1992, pp. 13,067–13,090.

T.W. Thompson, et al., *NASA/JPL Aircraft SAR Operations for 1984 and 1985*, JPL Publication 86-20, 1986.

D.E. Weissman, D.B. King, and T.W. Thompson “Relationship between Hurricane Surface Winds and L-Band Radar Backscatter from the Sea Surface,” *J. Appl. Meteorology*, vol. 18, no. 8, 1979, pp. 1023–1034.

Acronyms

AIDJEX	Arctic Ice Dynamics Joint Experiment
ASSESS	Airborne Science/Shuttle Experiment System Simulations
CV	Consolidated Vultee (Convair)
DC-8	Douglas Commercial (aircraft-Model 8)
HDDT	high-density digital tape
HH	transmit horizontal – receive horizontal
HV	transmit horizontal – receive vertical
IRIG	Inter-Range Instrumentation Group
JPL	Jet Propulsion Laboratory
JSC	Johnson Space Center
MHz	megahertz
NASA	National Aeronautics and Space Administration
Quad-Pol	quadrature polarization
SAR	Synthetic Aperture Radar
Seasat	Sea Satellite (sometimes referred to as SeaSat)
SIR	Spaceborne Imaging Radar (also referred to as Shuttle Imaging Radar)
STALO	stable local oscillator
STC	Sensitivity Time Control
USS	United States Ship
VH	Transmit Vertical – Receive Horizontal
VV	Transmit Vertical – Receive Vertical
WB-57	Martin Reconnaissance and Electronic Warfare Canberra aircraft

Appendix A – AIDJEX and ASSESS

A.1 AIDJEX – Arctic Ice Dynamics Joint Experiment

The Arctic Ice Dynamics Joint Experiment (AIDJEX) was a major comprehensive sea ice study in the Arctic/Beaufort Sea that took place primarily in 1975 and 1976. This AIDJEX program was the first major western sea ice experiment designed specifically to answer key questions about how sea ice moves and changes in response to the influence of ocean and atmosphere. A pilot study in 1972 was followed by the full-up AIDJEX field program in 1975 and 1976 with the JPL Aircraft SAR Team participating in 1976.

Researchers maintained four manned camps on Beaufort Sea ice floes where they collected meteorological and oceanographic data from instruments located at the camps and on floating data buoys. AIDJEX collected coordinated measurements over a year in order to have the right combination of data for understanding atmosphere and ice interactions. The submarine USS *Gurnard* participated by collecting data on ice draft, which is a proxy for ice thickness from upward-looking acoustical soundings (sonar).

The University of Washington led the logistics and research work of the program, which was a collaboration between the United States, Canada, and Japan. Norbert Untersteiner was instrumental in the design of AIDJEX and served as Project Director from 1971 to 1978. The Polar Science Center at the University of Washington maintains an AIDJEX electronic library (AIDJEX Electronic Library), which includes the contents of all 40 AIDJEX Bulletins from 1970 to 1978.

A.2 ASSESS – Airborne Science Shuttle Experiments Systems Simulations

A special NASA program, called ASSESS (Airborne Science/Shuttle Experiment System Simulations) was conducted in 1970s by the NASA Ames Airborne Science Program to provide exhaustive studies of the airborne-science concept as it may apply to Shuttle planning. For the JPL Aircraft SAR Program, this was a series of aircraft SAR data acquisitions undertaken in May and June 1977 to understand the ability of the Shuttle Imaging Radar to produce interpretable data geologic data. In total seven aircraft flights were undertaken.

Appendix B – Details of the Aircraft SAR Data Collection, 1976–1985 (JPL Archives)

The following Archives finding aid (JPL576) dated December 15, 2015, is unchanged except for some reformatting to fit inside wider margins and renumbering to be an appendix.

Details of the Aircraft SAR Data Collection, 1976–1985 (JPL Archives)

5.7 cubic feet
JPL576

Scope and Content

This collection contains materials created and organized by Dr. Ronald Blom, relating to early Synthetic Aperture Radar experiments and sea ice experiments conducted by JPL. Specifically, it contains image data from JPL aircraft radar expeditions flown in the 1970s and 1980s. These expeditions recorded and optically processed radar images of terrestrial data using Synthetic Aperture Radar (SAR). These expeditions laid the foundation for later satellite missions, such as Seasat and the Spaceborne Imaging Radar (SIR) missions, which would use similar techniques to further Earth science studies.

Background Note

Prior to the development of SAR instruments for satellites like Seasat and those flown on the shuttle, several aircraft SAR expeditions were flown in the 1970s. These were carried out at NASA's Ames Airborne Laboratory aboard a commercial Convair-990 aircraft. The Ames Airborne Laboratory conducted a number of expeditions throughout each year of the study, where optical and radar experiments mounted in and on the aircraft captured terrestrial geographic data. SAR data was recorded optically on long strips of film. These experiments provided validation for SAR techniques and calibration for other SAR missions. Additional, extensive background information has been prepared by engineer Dr. Thomas W. Thompson (3300), and is included in an appendix at the end of this document. Thompson was a contributor on the aircraft SAR project.

Arrangement and Description

Items are arranged chronologically by expedition. Each expedition set corresponds with a letter and a series of boxes ***(19 boxes total):***

Expedition A *(4 boxes)* – AIDJEX (Beaufort Sea) / ASSESS/ Joint JPL-French Experiment / Hurricane 1976

Expedition B *(3 boxes)* – Winter 1984 / Summer-Fall 1984 / Spring 1985

Expedition C *(3 boxes)* – AIDJEX (Beaufort Sea) / Winter Experiment / Geology 1978 / Guatemala (Geology 1978) / Alaska 1978

Expedition D *(3 boxes)* – AIDJEX (Beaufort Sea) / Winter Experiment / Geology 1978 / Guatemala (Geology 1978) / Alaska 1978

Expedition E *(3 boxes)* – Geology 1980 / Summer 1984 / Summer 1985

Expedition F *(2 boxes)* – Guatemala for Walter Brown – 1977, 1978, 1980

Expedition G *(1 box)* – Extra Data (780520) / Winter 1979 / JSC X-band 1979-1981

The data from each lettered expedition is contained in multiple boxes. Most of the film rolls are in seventeen 12x14x3" boxes, and larger rolls are in two 5x12x10" boxes. Within these lettered boxes, individual rolls of the SAR data have been labeled, organized, and described. Information for each roll is organized in this document roughly according to the following scheme:

[Date, format 'YYMMDD-#'] – ex. 780520-1
[Title] – ex. Extra Data Channel D
[Location – Runs – Comments] – ex. Pasadena – 13 Runs –L-band H-V with STC
[Film format, Positive or Negative] – ex. Negative

Provenance

The collection was donated to the JPL Archives by Thomas W. Thompson (3300) in August 2015, and concurrently processed by archivists Kristin DeAnfrasio (2733) and Camille Mathieu (2733).

Access Restriction

Records must be reviewed before use and cleared before public release. Standard duplication fees may apply for copies of this material.
Contact the JPL Archives for assistance:

JPL Archives
archives@jpl.nasa.gov
http://beacon.jpl.nasa.gov/about-the-archives
818-354-4200

Acronym List and Technical Notes

AIDJEX	Arctic Ice Dynamics Joint Experiment
ASSESS	Airborne Science Shuttle Experiments Systems Simulations
H-H	Horizontal-Horizontal (*indicates transmit* Horizontal, *receive* Horizontal)
H-V	Horizontal-Vertical (*indicates transmit* Horizontal, *receive* Vertical)
JSC	Johnson Space Center
L-band	1 to 2 GHz frequency range
OR	Optical Run / Roll
NOSC	Naval Ocean Systems Center
STC	Sensitivity Time Control
V-H	Vertical-Horizontal (*indicates transmit* Vertical, *receive* Horizontal)
V-V	Vertical-Vertical (*indicates transmit* Vertical, *receive* Vertical)
X-band	8 to 12 GHz frequency range

BOX A-1 (1 of 19) **AIDJEX (Beaufort Sea) / ASSESS/ Joint JPL-French Experiment / Hurricane 1976**

Roll 1

760412-1
AIDJEX – Channel A
L-band H-V / V-V / H-H – 6 Runs / No Run IDs
Negative

Roll 2

760412-2
AIDJEX – Channel B
L-band H-H & V-V – 6 Runs / No Run IDs
Negative

760412-3
AIDJEX – Channel B
L-band H-H – ?? Runs / No Run IDs
Negative

760412-4 and 760413-1
AIDJEX – Channel B
L-band V-V – ?? Runs / No Run IDs
Negative

760413-2
AIDJEX – Channel B
L-band H-H & V-V – 4 Runs / No Run IDs
Negative

Roll 3

760425-1
AIDJEX – Channel B
L-band H-H & V-V – 6 Runs / No Run IDs
Negative

Roll 4

760412-1
AIDJEX – Channel D – X-band
X-band – ?? Runs / No Run IDs
Negative

760412-2
AIDJEX – Channel D – X-band
X-band – ?? Runs / No Run IDs
Negative

760412-3 and 760413-1
AIDJEX – Channel D – X-band
X-band – ?? Runs / No Run IDs
Negative

760413-2 and 760413-3
AIDJEX – Channel D – X-band
X-band – ?? Runs / No Run IDs
Negative

Roll 5

760425-4 and 760426-1
AIDJEX – Channel D – X-band
X-band – ?? Runs / No Run IDs
Negative

760426-2
AIDJEX – Channel D – X-band
X-band – ?? Runs / No Run IDs
Negative

760426-3
AIDJEX – Channel D – X-band
X-band – ?? Runs / No Run IDs
Negative

Roll 8

770524-1
ASSESS – Channel A
L-band H-V with STC - 770524-1 – 8 Runs / No Run IDs
Negative

770525-1
ASSESS – Channel A
L-band H-V with STC – 14 Runs / No Run IDs
Negative

770529-1
ASSESS – Channel A
L-band H-V with STC – 15 Runs / No Run IDs
Negative

770531-2
ASSESS – Channel A
L-band H-V with STC – 7 Runs / No Run IDs
Negative

770615-4
ASSESS – Channel A
L-band H-V with STC – 1 Run / No Run IDs
Negative

770626-1
ASSESS – Channel A
L-band H-V no STC – 1 Run / No Run IDs
Negative

Roll 9

770521-1
ASSESS – Channel B
L-band H-H with STC – 5 Runs / No Run IDs
Negative

770524-1
ASSESS – Channel B
L-band H-H with STC – 8 Runs / No Run IDs
Negative

770525-1
ASSESS – Channel B
L-band H-H with STC – 15 Runs / No Run IDs
Negative

770526-2
ASSESS – Channel B
L-band H-H Single Look – ?? Runs / No Run IDs
Negative

770529-1
ASSESS – Channel B
L-band H-H with STC – 13 Runs / No Run IDs
Negative

770531-1
ASSESS – Channel B
L-band H-H with STC – 1 Run – No Run IDs
Negative

770615-4
ASSESS – Channel B
L-band H-H with STC – 1 Run / No Run IDs
Negative

770626-1
ASSESS – Channel B
L-band H-H with STC – 1 Run / No Run IDs
Negative

Roll 10

770521-1
ASSESS – Channel C
L-band H-H with STC – 2 Runs / No Run IDs
Negative

770526-1
ASSESS – Channel C
L-band H-V with STC – ?? Runs / No Run IDs
Negative

770529-1
ASSESS – Channel C
L-band H-V with STC – 13 Runs / No Run IDs
Negative

770531-2
ASSESS – Channel C
L-band H-V with STC – 13 Runs / No Run IDs
Negative

770615-1 and 770615-2
ASSESS – Channel C
L-band H-H with STC – Run 4 Only / No Run IDs
Negative

Roll 11

770526-1
ASSESS – Channel D
L-band & X-band H-H – 1 Run / No Run IDs
Negative

770529-2
ASSESS – Channel D
L-band H-H with STC – 13 Runs / No Run IDs
Negative

770531-1
ASSESS – Channel D
L-band H-H with STC – 7 Runs / No Run IDs
Negative

770615-3
ASSESS – Channel D
L-band H-H with STC – 4 Runs / No Run IDs
Negative

Roll 12

770529-1
ASSESS – Channel B – 1 Look
L-band H-H with STC – 13 Runs / No Run IDs
Negative

Roll 13

770529-1
ASSESS – Channel B – 4 Looks
L-band H-H with STC – 17 Runs / No Run IDs
Negative

Roll 14

770531-1
ASSESS – Channel A
L-band H-V with STC – 7 Runs / No Run IDs
Negative

Roll 15

770531-1
ASSESS – Channel B
L-band H-H with STC – 13 Runs / No Run IDs
Negative

Roll 16

770531-1
ASSESS – Channel C
L-band V-V with STC – 13 Runs / No Run IDs
Negative

Roll 17

770531-1
ASSESS – Channel D
L-band H-C with STC – 13 Runs / No Run IDs
Negative

Roll 18
(1 of 2)

790719-1
Joint JPL French Experiment Channel A / L-band H-V with STC
Runs 1-4 – V de Seine / Runs 5-6 – Orleans / Runs 7-14 – Morran
Negative

790720-1 and 790721-1
Joint JPL French Experiment Channel A / L-band H-V with STC
Runs 1-9 – Les Dombes / Runs 10-18 – Nyons / Runs 19-20 – Dignes
Negative

790721-2 and 790722-1
Joint JPL French Experiment Channel A / L-band H-V with STC
Runs 1-2 – St. Tropez / Runs 3-10 – Les Vans / Runs 11-12 – Toulouse
Negative

790722-2
Joint JPL French Experiment Channel A / L-band H-V with STC
Runs 1-4 – Bordeaux / Runs 5-8 – Pte de Gironde
Negative

790723-1
Joint JPL French Experiment Channel A / L-band H-V with STC
Runs 1-3 – Omaha Beach
Negative

Roll 18
(2 of 2)

790719-1
Joint JPL French Experiment Channel A / L-band H-V with STC
Runs 1-4 – V de Seine / Runs 5-6 – Orleans / Runs 7-14 – Morran
Positive

790720-1 and 790721-1
Joint JPL French Experiment Channel A / L-band H-V with STC
Runs 1-9 – Les Dombes / Runs 10-18 – Nyons / Runs 19-20 – Dignes
Positive

790721-2 and 790722-1
Joint JPL French Experiment Channel A / L-band H-V with STC
Runs 1-2 – St. Tropez / Runs 3-10 – Les Vans / Runs 11-12 – Toulouse
Positive

790722-2
Joint JPL French Experiment Channel A / L-band H-V with STC
Runs 1-4 – Bordeaux / Runs 5-8 – Pte de Gironde
Positive

790723-1
Joint JPL French Experiment Channel A / L-band H-V with STC
Runs 1-3 – Omaha Beach
Positive

Roll 19 (1 of 2)

790719-1
Joint JPL French Experiment Channel B / L-band H-H with STC
Runs 1-4 – V de Seine / Runs 5-6 – Orleans / Runs 7-14 – Morran
Negative

790720-1 and 790721-1
Joint JPL French Experiment Channel B / L-band H-H with STC
Runs 1-9 – Les Dombes / Runs 10-18 – Nyons / Runs 19-20 – Dignes
Negative

790721-2 and 790722-1
Joint JPL French Experiment Channel B / L-band H-H with STC
Runs 1-2 – St. Tropez / Runs 3-10 – Les Vans / Runs 11-12 – Toulouse
Negative

790722-1
Joint JPL French Experiment Channel B / L-band H-H with STC
Runs 1-4 – Bordeaux / Runs 5-8 – Pte de Gironde
Negative

790723-1
Joint JPL French Experiment Channel B / L-band H-H with STC
Runs 1-3 – Omaha Beach
Negative

Roll 19 (2 of 2)

790719-1
Joint JPL French Experiment Channel B / L-band H-H with STC
Runs 1-4 – V de Seine / Runs 5-6 – Orleans / Runs 7-14 – Morran
Positive

790720-1 and 790721-1
Joint JPL French Experiment Channel B / L-band H-H with STC
Runs 1-9 – Les Dombes / Runs 10-18 – Nyons / Runs 19-20 – Dignes
Positive

790721-2 and 790722-1
Joint JPL French Experiment Channel B / L-band H-H with STC
Runs 1-2 – St. Tropez / Runs 3-10 – Les Vans / Runs 11-12 – Toulouse
Positive

790722-1
Joint JPL French Experiment Channel B / L-band H-H with STC
Runs 1-4 – Bordeaux / Runs 5-8 – Pte de Gironde
Positive

790723-1
Joint JPL French Experiment Channel B / L-band H-H with STC
Runs 1-3 – Omaha Beach
Positive

BOX A-2 (2 of 19) **AIDJEX (Beaufort Sea) / ASSESS/ Joint JPL-French Experiment / Hurricane 1976**

Roll 20 (1 of 2)

790719-1
Joint JPL French Experiment Channel C / L-band H-V with STC
Runs 1-4 – V de Seine / Runs 5-6 – Orleans / Runs 7-14 – Morran
Negative

790720-1 and 790721-1
Joint JPL French Experiment Channel C / L-band H-V with STC
Runs 1-9 – Les Dombes / Runs 10-18 – Nyons / Runs 19-20 – Dignes
Negative

790721-2 and 790722-1
Joint JPL French Experiment Channel C / L-band H-V with STC
Runs 1-2 – St. Tropez / Runs 3-10 – Les Vans / Runs 11-12 – Toulouse
Negative

790722-1
Joint JPL French Experiment Channel C / L-band H-V with STC
Runs 1-4 – Bordeaux / Runs 5-8 – Pte de Gironde
Negative

790723-1
Joint JPL French Experiment Channel C / L-band H-V with STC
Runs 1-3 – Omaha Beach
Negative

Roll 20 (2 of 2)

790719-1
Joint JPL French Experiment Channel C / L-band H-V with STC
Runs 1-4 – V de Seine / Runs 5-6 – Orleans / Runs 7-14 – Morran
Positive

790720-1 and 790721-1
Joint JPL French Experiment Channel C / L-band H-V with STC
Runs 1-9 – Les Dombes / Runs 10-18 – Nyons / Runs 19-20 – Dignes
Positive

790721-2 and 790722-1
Joint JPL French Experiment Channel C / L-band H-V with STC
Runs 1-2 – St. Tropez / Runs 3-10 – Les Vans / Runs 11-12 – Toulouse
Positive

790722-1
Joint JPL French Experiment Channel C / L-band H-V with STC
Runs 1-4 – Bordeaux / Runs 5-8 – Pte de Gironde
Positive

790723-1
Joint JPL French Experiment Channel C / L-band H-V with STC
Runs 1-3 – Omaha Beach
Positive

Roll 21
(1 of 2)

790719-1
Joint JPL French Experiment Channel D / L-band H-H with STC
Runs 1-4 – V de Seine / Runs 5-6 – Orleans / Runs 7-14 – Morran
Negative

790720-1 and 790721-1
Joint JPL French Experiment Channel D / L-band H-H with STC
Runs 1-9 – Les Dombes / Runs 10-18 – Nyons / Runs 19-20 – Dignes
Negative

790721-2 and 790722-1
Joint JPL French Experiment Channel D / L-band H-H with STC
Runs 1-2 – St. Tropez / Runs 3-10 – Les Vans / Runs 11-12 – Toulouse
Negative

790722-1
Joint JPL French Experiment Channel D / L-band H-H with STC
Runs 1-4 – Bordeaux / Runs 5-8 – Pte de Gironde
Negative

790723-1
Joint JPL French Experiment Channel D / L-band H-H with STC
Runs 1-3 – Omaha Beach
Negative

Roll 21
(2 of 2)

790719-1
Joint JPL French Experiment Channel D / L-band H-H with STC
Runs 1-4 – V de Seine / Runs 5-6 – Orleans / Runs 7-14 – Morran
Positive

790720-1 and 790721-1
Joint JPL French Experiment Channel D / L-band H-H with STC
Runs 1-9 – Les Dombes / Runs 10-18 – Nyons / Runs 19-20 – Dignes
Positive

790721-2 and 790722-1
Joint JPL French Experiment Channel D / L-band H-H with STC
Runs 1-2 – St. Tropez / Runs 3-10 – Les Vans / Runs 11-12 – Toulouse
Positive

790722-1
Joint JPL French Experiment Channel D / L-band H-H with STC
Runs 1-4 – Bordeaux / Runs 5-8 – Pte de Gironde
Positive

790723-1
Joint JPL French Experiment Channel D / L-band H-H with STC
Runs 1-3 – Omaha Beach
Positive

Roll 22

760817-1
Hurricane ’76 / Channel B
L-band H-H – ?? Runs / No Run IDs
Positive

760823-4 and 760824-1
Hurricane ’76 / Channel B
L-band H-H – ?? Runs / No Run IDs
Positive

760922-1
Hurricane ’76 / Channel B
L-band H-H – Runs 1-6 (Run 5 removed) / No Run IDs
Positive

Roll 23

760817-1
Hurricane ’76 / Channel A
X-band H-H – ?? Runs / No Run IDs
Positive

760823-4 and 760824-1
Hurricane ’76 / Channel A
X-band H-H – ?? Runs / No Run IDs
Positive

761001-1
Hurricane ’76 / Channel B
X-band H-H – ?? Runs / No Run IDs
Positive

Roll 24

760824-2
Hurricane ’76 / Channel A
X-band H-H with STC – ?? Runs / No Run IDs
Positive

760825-1
Hurricane ’76 / Channel A
X-band H-H with STC – ?? Runs / No Run IDs
Positive

760831-1
Hurricane ’76 / Channel A
X-band H-H with STC – ?? Runs / No Run IDs
Positive

760831-2
Hurricane ’76 / Channel A
X-band H-H with STC – ?? Runs / No Run IDs
Positive

760928-2
Hurricane ’76 / Channel A
X-band H-H with STC – ?? Runs / No Run IDs
Positive

Roll 25

760817-1
Hurricane ’76 / Channel B#1
L-band H-H with STC – ?? Runs / No Run IDs
Positive

760823-4 and 760824-1
Hurricane ’76 / Channel B#1
Both L-band H-H with STC – ?? Runs / No Run IDs
Positive

760922-1
Hurricane ’76 / Channel B#1
L-band H-H – 5 Runs / No Run IDs
Positive

761001-2
Hurricane ’76 / Channel B#1
X-band H-H – ?? Runs / No Run IDs
Positive

760930-2
Hurricane ’76 / Channel B#1
X-band H-H with STC – ?? Runs / No Run IDs
Positive

761001-2
Hurricane ’76 / Channel B#1
X-band H-H with STC – ?? Runs / No Run IDs
Positive

Roll 26

760824-1
Hurricane ’76 / Channel C#1
X-band H-H – ?? Runs / No Run IDs
Positive

760824-2
Hurricane ’76 / Channel C#1
X-band H-H – ?? Runs / No Run IDs
Positive

760824-3
Hurricane ’76 / Channel C#1
X-band H-H with STC – ?? Runs / No Run IDs
Positive

760825-1
Hurricane ’76 / Channel C#1
X-band H-H – ?? Runs / No Run IDs
Positive

760831-1
Hurricane ’76 / Channel C#1
X-band H-H – ?? Runs / No Run IDs
Positive

760831-2
Hurricane ’76 / Channel C#1
X-band H-H – ?? Runs / No Run IDs
Positive

760928-1 and 760930-1
Hurricane ’76 / Channel C#1
Both X-band H-H with STC – ?? Runs / No Run IDs
Positive

760930-2
Hurricane ’76 / Channel C#1
X-band H-H with STC – ?? Runs / No Run IDs
Positive

Roll 27

760824-1
Hurricane ’76 / Channel D
L-band H-H with STC – ?? Runs / No Run IDs
Positive

760824-2
Hurricane ’76 / Channel D
L-band H-H with STC – ?? Runs / No Run IDs
Positive

760824-3
Hurricane ’76 / Channel D
L-band H-H with STC – ?? Runs / No Run IDs
Positive

760825-1
Hurricane ’76 / Channel D
L-band H-H with STC – ?? Runs / No Run IDs
Positive

Roll 28

760824-1
Hurricane ’76 / Channel C
X-band H-H – ?? Runs / No Run IDs
Positive

760824-1
Hurricane ’76 / Channel C
X-band H-H – Run 8 Only / No Run IDs
Positive

760824-2
Hurricane ’76 / Channel C
X-band H-H – Runs 2-12 Only / No Run IDs
Positive

760825-1
Hurricane ’76 / Channel C
X-band H-H – ?? Runs / No Run IDs
Positive

760831-2
Hurricane ’76 / Channel C
X-band H-H – ?? Runs / No Run IDs
Positive

Roll 30

760928-1
Hurricane ’76 / Channel D
X-band H-H no STC – ?? Runs / No Run IDs
Positive

760930-1
Hurricane ’76 / Channel D
X-band H-H no STC – ?? Runs / No Run IDs
Positive

Roll 32

760817-1
Hurricane ’76 / Channel B#2
L-band H-H Configured for Surface Imagery – ?? Runs / No Run IDs
Positive

760823-4 and 760824-1
Hurricane ’76 / Channel B#2
L-band H-H – ?? Runs / No Run IDs
Positive

760922-1
Hurricane ’76 / Channel B#2
L-band H-H 40Hz Doppler bandwidth – 6 Runs with Run 5 removed / No Run IDs
Positive

760930-1
Hurricane ’76 / Channel B#2
L-band H-H with STC – ?? Runs / No Run IDs
Positive

760930-2
Hurricane ’76 / Channel B#2
L-band H-H – ?? Runs / No Run IDs
Positive

761001-1
Hurricane ’76 / Channel B#2
L-band H-H – ?? Runs / No Run IDs
Positive

BOX A-3 (3 of 19)

AIDJEX (Beaufort Sea) / ASSESS/ Joint JPL-French Experiment / Hurricane 1976

Roll 6

760416-2
AIDJEX – Channel B
Large Concatenated Roll
Negative

760416-3
AIDJEX – Channel B
Large Concatenated Roll
Negative

760416-4 and 760418-1
AIDJEX – Channel B
Large Concatenated Roll
Negative

760418-2
AIDJEX – Channel B
Large Concatenated Roll
Negative

760418-3 and 760419-1
AIDJEX – Channel B
Large Concatenated Roll
Negative

760419-2
AIDJEX – Channel B
Large Concatenated Roll
Negative

760421-3
AIDJEX – Channel B
Large Concatenated Roll
Negative

760421-4 and 760425-1
AIDJEX – Channel B
Large Concatenated Roll
Negative

760425-2
AIDJEX – Channel B
Large Concatenated Roll
Negative

760425-4 and 760426-1
AIDJEX – Channel B
Large Concatenated Roll
Negative

760426-2
AIDJEX – Channel B
Large Concatenated Roll
Negative

760426-3
AIDJEX – Channel B
Large Concatenated Roll
Negative

Roll 7

760416-4 and 760418-1
AIDJEX – Channel D
Large Concatenated Roll
Negative

760418-3 and 760419-1
AIDJEX – Channel D
Large Concatenated Roll
Negative

760419-2
AIDJEX – Channel D
Large Concatenated Roll
Negative

760421-1
AIDJEX – Channel D
Large Concatenated Roll
Negative

760421-3 and 760425-1
AIDJEX – Channel D
Large Concatenated Roll
Negative

760425-2
AIDJEX – Channel D
Large Concatenated Roll
Negative

760425-3
AIDJEX – Channel D
Large Concatenated Roll
Negative

BOX A-4 (4 of 19) **AIDJEX (Beaufort Sea) / ASSESS/ Joint JPL-French Experiment / Hurricane 1976**

Roll 29

760825-1
Hurricane ’76 / Channel B#4
L-band H-H – No Data for Runs 4-5 / ?? Runs / No Run IDs
Positive

760927-3
Hurricane ’76 / Channel B#4
L-band H-H – ?? Runs / No Run IDs
Positive

760927-3 and 760928-1
Hurricane ’76 / Channel B#4
L-band H-H – 2 Runs / No Run IDs
Positive

760928-2
Hurricane ’76 / Channel B#4
L-band H-H – ?? Runs / No Run IDs
Positive

Roll 31

760927-3
Hurricane ’76 / Channel A
L-band H-H with STC – ?? Runs / No Run IDs
Positive

760927-3 and 760928-1
Hurricane ’76 / Channel A
L-band H-H with STC – ?? Runs / No Run IDs
Positive

760930-1
Hurricane ’76 / Channel A
L-band H-H with STC – ?? Runs / No Run IDs
Positive

760930-2
Hurricane ’76 / Channel A
L-band H-H with STC – ?? Runs / No Run IDs
Positive

Roll 33

761001-1
Hurricane ’76 / Channel B
L-band H-H with STC – ?? Runs / No Run IDs
Positive

761003-1 (first leg)
Hurricane ’76 / Channel B
L-band H-H with STC – ?? Runs / No Run IDs
Positive

761003-2 (first leg)
Hurricane ’76 / Channel B
L-band H-H with STC – ?? Runs / No Run IDs
Positive

761003-1 (second leg)
Hurricane ’76 / Channel B
L-band H-H with STC – ?? Runs / No Run IDs
Positive

761003-2 (second leg)
Hurricane ’76 / Channel B
L-band H-H with STC – ?? Runs / No Run IDs
Positive

BOX B-1 (5 of 19) **Winter 1984 / Summer-Fall 1984 / Spring 1985**

Roll 1
850217
Winter 1984 – Channel A
OR 2 / Position 2 / Moffett-Moffett / Sensor Checkout
Negative

Roll 2
840217
Winter 1984 – Channel B
OR 2 / Position 2 / Moffett-Moffett / Sensor Checkout
Negative

Roll 3
840228
Winter 1984 – Channel A
Moffett-Houston / East Texas / OR 2 / Position 2
Negative

840229
Winter 1984 – Channel A
Houston-Houston / North Texas Soil Moisture / OR 2 / Position 2
Negative

840301
Winter 1984 – Channel A
Houston-Langley Transit / OR 2 / Position 2
Negative

840303
Winter 1984 – Channel A
Langley-Langley / Virginia and Blackwater / OR 2 / Position 2
Negative

840306
Winter 1984 – Channel A
Moffett-Moffett / SIR-B Calibration / OR 2 / Position 2
Negative

Roll 4
840228
Winter 1984 – Channel A
Moffett-Houston / East Texas / OR 5 / Position 1
Negative

840229
Winter 1984 – Channel A
Houston-Houston / North Texas Soil Moisture / OR 5 / Position 1
Negative

840301
Winter 1984 – Channel A
Houston-Langley Transit / OR 5 / Position 1
Negative

840303
Winter 1984 – Channel A
Langley-Langley / Virginia and Blackwater / OR 5 / Position 1
Negative

840306
Winter 1984 – Channel A
Moffett-Moffett / SIR-B Calibration / OR 5 / Position 1
Negative

Roll 5

840228
Winter 1984 – Channel B
Moffett-Houston / East Texas / OR 2 / Position 2
Negative

840229
Winter 1984 – Channel B
Houston-Houston / North Texas Soil Moisture / OR 2 / Position 2
Negative

840301
Winter 1984 – Channel B
Houston-Langley Transit / OR 2 / Position 2
Negative

840303
Winter 1984 – Channel B
Langley-Langley / Virginia and Blackwater / OR 2 / Position 2
Negative

840306
Winter 1984 – Channel B
Moffett-Moffett / SIR-B Calibration / OR 2 / Position 2
Negative

Roll 6

840228
Winter 1984 – Channel B
Moffett-Houston / East Texas / OR 5 / Position 1
Negative

840229
Winter 1984 – Channel B
Houston-Houston / North Texas Soil Moisture / OR 5 / Position 1
Negative

840301
Winter 1984 – Channel B
Houston-Langley Transit / OR 5 / Position 1
Negative

840303
Winter 1984 – Channel B
Langley-Langley / Virginia and Blackwater / OR 5 / Position 1
Negative

840306
Winter 1984 – Channel B
Moffett-Moffett / SIR-B Calibration / OR 5 / Position 1
Negative

Roll 7

840228
Winter 1984 Special Recorrelation
Moffett-Houston / East Texas – Runs 4, 6 – Channels A & B
Negative

840301
Winter 1984 Special Recorrelation
Houston-Langley Transit – Runs 13, 15, 17 – Channels A & B
Negative

840303
Winter 1984 Special Recorrelation
Langley-Langley / Virginia and Blackwater – Run 16 – Channels A & B
Negative

Roll 8

[Missing]

Roll 9
(1 of 2)

840816
1984 Summer Test Flights
Moffett-Moffett / Sensor Checkout 1 / OR 2 & 5 / Positions L & R / Channel A
Negative

Roll 9
(2 of 2)

840816
1984 Summer Test Flights
Moffett-Moffett / Sensor Checkout 1 / OR 2 & 5 / Positions L & R / Channel A
Positive

Roll 10

840816
1984 Summer-Fall – EMP
Moffett-Moffett / Sensor Checkout / OR 2 & 5 / Positions L & R / Channels A & B
Negative

Roll 11

840816
1984 Summer-Fall – Normalized DN
Moffett-Moffett / Sensor Checkout / OR 2 & 5 / Positions L & R / Channels A & B
Negative

Roll 12

840831
1984 Summer-Fall – Temp Roll C
Moffett-Moffett / Sensor Checkout 2 / OR 2 / Position 2 / Channel A
Negative

840906
1984 Summer-Fall – Temp Roll C
Moffett-Moffett / Sensor Checkout 3 / OR 2 / Position 2 / Channel A
Negative

Roll 13

840906
1984 Summer-Fall Unlabeled Positive
Moffett-Moffett / Sensor Checkout 3 / OR 2 / Position 2 / Channel A

Roll 14

840108
1984 Summer-Fall – OR 2 – Channel A – Position 2
Moffett-Topeka Transit / SIR-B Supersite
Negative

840110 and 840112
1984 Summer-Fall – OR 2 – Channel A – Position 2
Topeka-Topeka Transit / SIR-B Supersite
Negative

841017
1984 Summer-Fall – OR 2 – Channel A – Position 2
Topeka-Topeka / SIR-B Supersite
Negative

840118 and 840119
1984 Summer-Fall – OR – Channel A – Position 2
Moffett-Moffett / Wind and Snake River / Raisin City / SIR-B
Negative

841024
1984 Summer-Fall – OR 2 – Channel A – Position 2
Moffett-Moffett / Northern California / SIR-B
Negative

841025
1984 Summer-Fall – OR 2 – Channel A – Position 2
Moffett-Moffett / Southern California
Negative

841031
1984 Summer-Fall – OR 2 – Channel A – Position 2
Moffett-Moffett / Second NOSC Flight
Negative

841104 and 841106
1984 Summer-Fall – OR 2 – Channel A – Position 2
Moffett-Moffett / Third NOSC Flight / Southern California
Negative

841107
1984 Summer-Fall – OR 2 – Channel A – Position 2
Moffett-Moffett / Fourth (Last) NOSC Flight
Negative

BOX B-2 (6 of 19) **Winter 1984 / Summer-Fall 1984 / Spring 1985**

Roll 15 (1 of 2)

840108
1984 Summer-Fall – OR 2 – Channel A – Position 2 – Annotated
Moffett-Topeka Transit / SIR-B Supersite / H-H
Negative

840109
1984 Summer-Fall – OR 2 – Channel A – Position 2 – Annotated
Topeka-Topeka / SIR-B Supersite / H-H
Negative

840110
1984 Summer-Fall – OR 2 – Channel A – Position 2 – Annotated
Topeka-Topeka / SIR-B Supersite / H-H
Negative

Roll 15 (2 of 2)

840108
1984 Summer-Fall – OR 2 – Channel A – Position 2 – Annotated
Moffett-Topeka Transit / SIR-B Supersite / H-H
Positive

840109
1984 Summer-Fall – OR 2 – Channel A – Position 2 – Annotated
Topeka-Topeka / SIR-B Supersite / H-H
Positive

840110
1984 Summer-Fall – OR 2 – Channel A – Position 2 – Annotated
Topeka-Topeka / SIR-B Supersite / H-H
Positive

Roll 16

840108
1984 Summer-Fall – OR 2 – Channel A – Position 2 – Annotated
Moffett-Topeka Transit / SIR-B Supersite / H-H
Positive

840109
1984 Summer-Fall – OR 2 – Channel A – Position 2 – Annotated
Topeka-Topeka / SIR-B Supersite / H-H
Positive

840110
1984 Summer-Fall – OR 2 – Channel A – Position 2 – Annotated
Topeka-Topeka / SIR-B Supersite / H-H
Positive

Roll 17

840111
1984 Summer-Fall – OR 2 – Channel A – Position 2 – Annotated
Topeka-Topeka / SIR-B Supersite
Positive

840112
1984 Summer-Fall – OR 2 – Channel A – Position 2 – Annotated
Topeka-Topeka / SIR-B Supersite
Positive

840112
1984 Summer-Fall – OR 2 – Channel A – Position 2 – Annotated
Topeka-Moffett Transit / Wind River
Positive

Roll 18

840111
1984 Summer-Fall
OR 2 / Position 2 / Channel A / Annotated / H-H / Topeka-Topeka / SIR-B Supersite
Positive

Roll 19

850314
1985 Spring – Channel A
Moffett-Moffett / Sensor Checkout 2 / OR 2 / Position 2
Positive

850314
1985 Spring – Channel A
Moffett-Moffett / Sensor Checkout 2 / OR 5 / Position 1
Positive

Roll 20

850314
1985 Spring – Channel B
Moffett-Moffett / Sensor Checkout 2 / OR 2 / Position 2
Positive

850314
1985 Spring – Channel B
Moffett-Moffett / Sensor Checkout 2 / OR 5 / Position 1
Positive

Roll 21 (1 of 7)	850314 1985 Spring – Moffett-Moffett – Sensor Checkout 2 – Position 2 – Channel B Channel A / Position 1 Positive
Roll 21 (2 of 7)	850314 1985 Spring – Moffett-Moffett – Sensor Checkout 2 – Position 2 – Channel B Channel A / Position 2 Positive
Roll 21 (3 of 7)	850314 1985 Spring – Moffett-Moffett – Sensor Checkout 2 – Position 2 – Channel B Channel A / Position 2 Positive
Roll 21 (4 of 7)	850314 1985 Spring – Moffett-Moffett – Sensor Checkout 2 – Position 2 – Channel B Channel B / Position 1 Positive
Roll 21 (5 of 7)	850314 1985 Spring – Moffett-Moffett – Sensor Checkout 2 – Position 2 – Channel B Channel B / Position 1 Positive
Roll 21 (6 of 7)	850314 1985 Spring – Moffett-Moffett – Sensor Checkout 2 – Position 2 – Channel B Channel B / Position 2 Positive
Roll 21 (7 of 7)	850314 1985 Spring – Moffett-Moffett – Sensor Checkout 2 – Position 2 – Channel B Channel B / Position 2 Positive
Roll 22	850319 1985 Spring – Channel A Moffett-Moffett / First NOSC Flight / OR 2 / Position 2 Positive
	850319 1985 Spring – Channel A Moffett-Moffett / First NOSC Flight / OR 5 / Position 1 Positive
Roll 23	850319 1985 Spring – Channel B Moffett-Moffett / First NOSC Flight / OR 2 / Position 2 Positive

850319
1985 Spring – Channel B
Moffett-Moffett / First NOSC Flight / OR 5 / Position 1
Positive

BOX B-3 (7 of 19) **Winter 1984 / Summer-Fall 1984 / Spring 1985**

Roll 24

850319
1985 Spring – Channel A
Moffett-Moffett / First NOSC Flight / OR 2 / Position 2
Positive

850319
1985 Spring – Channel A
Moffett-Moffett / First NOSC Flight / OR 5 / Position 1
Positive

850319
1985 Spring – Channel B
Moffett-Moffett / First NOSC Flight / OR 2 / Position 2
Positive

850319
1985 Spring – Channel B
Moffett-Moffett / First NOSC Flight / OR 5 / Position 1
Positive

Roll 25 (1 of 2)

850327
1985 Spring
Moffett-Moffett / Second NOSC Flight / OR 1 / Position 1 / Channel B
Negative

850327
1985 Spring
Moffett-Moffett / Second NOSC Flight / OR 2 / Position 2 / Channel B
Negative

Roll 25 (2 of 2)

850327
1985 Spring
Moffett-Moffett / Second NOSC Flight / OR 1 / Position 1 / Channel B
Positive

850327
1985 Spring
Moffett-Moffett / Second NOSC Flight / OR 2 / Position 2 / Channel B
Positive

Roll 26

850329
1985 Spring
Moffett-Houston Transit / OR 1 & 2 / Positions 1 & 2 / Channels A & B
Negative

850331
1985 Spring
San Jose / Costa Rica E-W Survey / OR 1 & 2 / Positions 1 & 2 / Channels A & B
Negative

850401
1985 Spring
San Jose / Costa Rica Study Areas / OR 1 & 2 / Positions 1 & 2 / Channels A & B
Negative

Roll 27
(1 of 2)

850331
1985 Spring
San Jose-San Jose / Costa Rica E-W Survey / OR 2 / Position 2 / Channel A
Positive

850401
1985 Spring
San Jose-San Jose / Costa Rica Study Areas / OR 5 / Position 1 / Channel A

Roll 27
(2 of 2)

850331
1985 Spring
San Jose-San Jose / Costa Rica E-W Survey / OR 2 / Position 2 / Channel A
Positive

850401
1985 Spring
San Jose-San Jose / Costa Rica Study Areas / OR 5 / Position 1 / Channel A
Positive

Roll 28

850331
1985 Spring
San Jose-San Jose / Costa Rica E-W Survey / OR 2 / Position 2 / Channel B
Positive

850401
1985 Spring
San Jose-San Jose / Costa Rica Study Areas / OR 5 / Position 1 / Channel B
Positive

Roll 29

850329
1985 Spring
Moffett-Houston Transit / OR 2 / Position 2 / Channel B
Positive

850331
1985 Spring
San Jose-San Jose / Costa Rica E-W Survey / OR 5 / Position 1 / Channel B
Positive

850401
1985 Spring
San Jose-San Jose / Costa Rica Study Areas / OR 5 / Position 1 / Channel B
Positive

Roll 30

850612
1985 Spring – OR 2 – Position 2 – Channel A
Moffett-Omaha Transit / Kansas 1
Negative

860614
1985 Spring – OR 2 – Position 2 – Channel A
Omaha-New Jersey Transit / Kansas 2
Negative

850617
1985 Spring – OR 2 – Position 2 – Channel A
New Jersey-Omaha Transit / Kansas 3
Negative

850618
1985 Spring – OR 2 – Position 2 – Channel A
Omaha-Moffett Transit / Kansas 4
Negative

BOX C-1 (8 of 19)

AIDJEX / Winter Experiment / Geology 1978 / Guatemala (Geology 1978) / Alaska 1978

Roll 1

760406 and 760412
AIDJEX IV (AEP 4) – Channel A
L-band V-H Run 1 / H-V Runs 2-3 / H-V Run 760412
Negative

760406
AIDJEX IV (AEP 4) – Channel A
L-band V-H
Negative

760407
AIDJEX IV (AEP 4) – Channel A
L-band – 7 Runs / V-H
Negative

760409-1
AIDJEX IV (AEP 4) – Channel A
L-band H-H
Negative

760409-2
AIDJEX IV (AEP 4) – Channel A
L-band H-H
Negative

Roll 2

760406 and 760412
AIDJEX IV (AEP 4) – Channel B
L-band V-H Run 1 / H-V Runs 2-3 / H-V Run 760412
Negative

760406
AIDJEX IV (AEP 4) – Channel B
L-band V-H
Negative

760407
AIDJEX IV (AEP 4) – Channel B
L-band – 7 Runs / V-H
Negative

760409-1
AIDJEX IV (AEP 4) – Channel B
L-band H-H
Negative

760409-2
AIDJEX IV (AEP 4) – Channel B
L-band H-H
Negative

Roll 3

760406 and 760412
AIDJEX IV (AEP 4) – Channel D
X-band V-H Run 1 / H-V Runs 2-3 / H-V Run 760412
Negative

760406
AIDJEX IV (AEP 4) – Channel D
X-band V-H
Negative

760407
AIDJEX IV (AEP 4) – Channel D
X-band – 7 Runs / V-H
Negative

`

760409-1
AIDJEX IV (AEP 4) – Channel D
X-band H-H
Negative

760409-2
AIDJEX IV (AEP 4) – Channel D
X-band H-H
Negative

Roll 4

770308
Winter Experiment Program – Channel A
L-band / H-H – Runs 2 and 3 only
Negative

770311
Winter Experiment Program – Channel A
Runs 1 & 3-9 – X-band H-H / Runs 1 & 2 – L-band H-V
Negative

770318-1
Winter Experiment Program – Channel A
X-band – 3 Runs
Negative

770318-2
Winter Experiment Program – Channel A
X-band
Negative

770324
Winter Experiment Program – Channel A
L-band H-V with STC / 10 Runs
Negative

770325
Winter Experiment Program – Channel A
L-band H-V with STC / 7 Runs
Negative

Roll 5

770311
Winter Experiment Program – Channel B
Out of Focus / Run 8 only / L-band H-H with STC
Negative

770328
Winter Experiment Program – Channel A
Recorrelated / High Contrast / DC Offset / 13 Runs / L-band H-H with STC
Negative

Roll 6

770316-2
Winter Experiment Program – Channel B
L-band – Run 1 H-H with STC
Negative

770318
Winter Experiment Program – Channel B
L-band – Runs 1-2 H-H with STC / Run 3 – H-H with no STC
Negative

770322
Winter Experiment Program – Channel B
L-band H-H with STC
Negative

770323
Winter Experiment Program – Channel B
Runs 1-8: L-band H-H with STC / Runs 9-10: V-V with STC
Negative

770324
Winter Experiment Program – Channel B
Version 1 – 3 Runs / L-band H-H with STC
Negative

770324
Winter Experiment Program – Channel B
Version 2 / L-band H-H with STC
Negative

770324
Winter Experiment Program – Channel B
10 Runs – L-band H-H with STC
Negative

770325-1
Winter Experiment Program – Channel B
9 Runs – L-band H-H with STC
Negative

770325-2
Winter Experiment Program – Channel B
7 Runs – L-band H-H with STC
Negative

770328
Winter Experiment Program – Channel B
10 Runs – L-band H-H with STC
Negative

Roll 7

770325-2
Winter Experiment Program – Channel B – Special Focus – 5-Sided Pattern
L-band H-V with STC
Negative

Roll 8

770328-1
Winter Experiment Program – Channel D
13 Runs – L-band H-H with STC
Negative

770328-2
Winter Experiment Program – Channel B
6 Runs – L-band H-H with STC
Negative

Roll 9

780330-1
Geology 78 – Channel A – Part 1 of 2
Crater Lake – 12 Runs / Runs 1-11: L-band H-V with STC / Run 12: X-band H-H no STC
Negative

780403
Geology 78 – Channel A – Part 1 of 2
Science Pattern #1 (Runs 1-4) / JPL Test Flight #2 / 14 Runs / Runs 1-2 & 5-14: L-band H-V with STC / Runs 3-4; V-H with STC
Negative

780403-2
Geology 78 – Channel A – Part 1 of 2
JPL Test Flight 2 / L-band H-V
Negative

780406-1
Geology 78 – Channel A – Part 1 of 2
JPL Test Flight 3 / X-band H-H with no STC
Negative

780410-1
Geology 78 – Channel A – Part 1 of 2
9 Runs / ASSAF Calibration Test / X-band H-H with STC
Negative

780412
Geology 78 – Channel A – Part 1 of 2
Arizona / Mojave / Engineering Test Runs / Runs 1-8: X-band H-H with STC / Runs 9 & 15-23: L-band H-V with STC / Runs 10-11: L-band V-H with STC / Runs 12-14: X-band H-H with no STC
Negative

780413-1
Geology 78 – Channel A – Part 1 of 2
Arkansas / Runs 1-15: L-band V-H with STC / Runs 16-19: X-band H-H with STC
Negative

780413-2
Geology 78 – Channel A – Part 1 of 2
Arkansas / Runs 1-11 & 12-14: X-band H-H with STC / Run 12: No STC
Negative

Roll 10

780403-2
Geology 78 – Channel B – Part 1 of 4
JPL Test Flight 2 / L-band H-V
Negative

780406-1
Geology 78 – Channel B – Part 1 of 4
JPL Test Flight 3 / X-band H-H with no STC
Negative

780410-1
Geology 78 – Channel B – Part 1 of 4
9 Runs / ASSAF Calibration Test / X-band H-H with STC
Negative

780412
Geology 78 – Channel B – Part 1 of 4
Arizona / Mojave / Engineering Test Runs / Runs 1-8: X-band H-H with STC / Runs 9 & 15-23: L-band H-V with STC / Runs 10-11: L-band V-H with STC / Runs 12-14: X-band H-H with no STC
Negative

780413
Geology 78 – Channel B – Part 1 of 4
Arkansas / Runs 1-15: L-band V-H with STC / Runs 16-19: X-band H-H with STC
Negative

780413
Geology 78 – Channel B – Part 1 of 4
Arkansas / Runs 1-11 & 12-14: X-band H-H with STC / Run 12: No STC
Negative

Roll 11

780403-2
Geology 78 – Channel C – Part 1 of 2
JPL Test Flight 2 / L-band H-V
Negative

780406-1
Geology 78 – Channel C – Part 1 of 2
JPL Test Flight 3 / X-band H-H with no STC
Negative

780410-1
Geology 78 – Channel C – Part 1 of 2
9 Runs / ASSAF Calibration Test / X-band H-H with STC
Negative

780412
Geology 78 – Channel C – Part 1 of 2
Arizona / Mojave / Engineering Test Runs / Runs 1-8: X-band H-H with STC / Runs 9 & 15-23: L-band H-V with STC / Runs 10-11: L-band V-H with STC / Runs 12-14: X-band H-H with no STC
Negative

780413
Geology 78 – Channel C – Part 1 of 2
Arkansas / Runs 1-15: L-band V-H with STC / Runs 16-19: X-band H-H with STC
Negative

780413
Geology 78 – Channel C – Part 1 of 2
Arkansas / Runs 1-11 & 12-14: X-band H-H with STC / Run 12: No STC
Negative

Roll 12

780403-2
Geology 78 – Channel D – Part 1 of 4
JPL Test Flight 2 / L-band H-V
Negative

780406-1
Geology 78 – Channel D – Part 1 of 4
JPL Test Flight 3 / X-band H-H with no STC
Negative

780410-1
Geology 78 – Channel D – Part 1 of 4
9 Runs / ASSAF Calibration Test / X-band H-H with STC
Negative

780412
Geology 78 – Channel D – Part 1 of 4
Arizona / Mojave / Engineering Test Runs / Runs 1-8: X-band H-H with STC /
23: L-band H-V with STC / Runs 10-11: L-band V-H with STC / Runs 12-14: X-band H-H
Negative

780413
Geology 78 – Channel D – Part 1 of 4
Arkansas / Runs 1-15: L-band V-H with STC / Runs 16-19: X-band H-H with STC
Negative

780413
Geology 78 – Channel D – Part 1 of 4
Arkansas / Runs 1-11 & 12-14: X-band H-H with STC / Run 12: No STC
Negative

Roll 13

780412
Geology 78 – Channel B – Special Processing for Mosaic – 300m Res. 25 Looks
23 Runs / L-band H-H with STC
Negative

780412
Geology 78 – Channel B – Special Processing for Mosaic – 300m Res. 25 Looks
15 Runs / L-band H-H with STC
Negative

780503
Geology 78 – Channel B – Special Processing for Mosaic – 300m Res. 25 Looks
13 Runs / L-band H-H with STC
Negative

780503
Geology 78 – Channel B – Special Processing for Mosaic – 300m Res. 25 Looks
4 Runs / L-band H-H with STC
Negative

780508
Geology 78 – Channel B – Special Processing for Mosaic – 300m Res. 25 Looks
13 Runs / L-band V-V with STC
Negative

780508
Geology 78 – Channel B – Special Processing for Mosaic – 300m Res. 25 Looks
Run 1: L-band H-H with STC / Runs 2-3: V-V with STC
Negative

780512
Geology 78 – Channel B – Special Processing for Mosaic – 300m Res. 25 Looks
5 Runs / L-band H-H with STC
Negative

780512
Geology 78 – Channel B – Special Processing for Mosaic – 300m Res. 25 Looks
14 Runs / Runs 1-10 & 13-14: L-band H-H with STC / Runs 11-12: X-band H-H with no STC
Negative

Roll 14

780412-1
Geology 78 – Channel B
Arizona / Mojave / Engineering Test Runs / Runs 1-9, 12-23: L-band H-H with STC / Runs 10-11: V-V with STC
Negative

780412-2
Geology 78 – Channel B
Arizona / El Paso –15 Runs – L-band H-H with STC
Negative

Roll 15

780412
Geology 78 – Grand Canyon – Special Processing – Channel B – 50m Resolution
Runs 1-9, 12-23: L-band with STC / Run 10: H-H & V-V / Run 11: V-V
Negative

780412
Geology 78 – Grand Canyon – Special Processing – Channel B – 50m Resolution
Arizona / El Paso – L-band H-H with STC
Negative

780503
Geology 78 – Grand Canyon – Special Processing – Channel B – 50m Resolution
Amboy Crater / Flagstaff – L-band H-H with STC
Negative

780508
Geology 78 – Grand Canyon – Special Processing – Channel B – 50m Resolution
Amboy Crater / Flagstaff – Run 1: L-band V-V with HTC / Runs 2-13: H-H with STC
Negative

780508
Geology 78 – Grand Canyon – Special Processing – Channel B – 50m Resolution
Amboy Crater / Flagstaff / Death Valley / Grand Canyon – Runs 1-2: L-band H-H with STC / Run 3: V-V with STC
Negative

780512
Geology 78 – Grand Canyon – Special Processing – Channel B – 50m Resolution
Amboy Crater / Flagstaff / Death Valley / Grand Canyon – L-band H-H with STC
Negative

780512
Geology 78 – Grand Canyon – Special Processing – Channel B – 50m Resolution
Grand Canyon / Death Valley – Runs 1, 2, 5, 6: L-band H-H with STC / Runs 3-4: X-band H-H with no STC
Negative

Roll 16

780412
Geology 78 – Grand Canyon – Special Processing – Channel B – 300m Resolution
Runs 1-9, 12-23: L-band with STC / Run 10: H-H & V-V / Run 11: V-V
Negative

780412
Geology 78 – Grand Canyon – Special Processing – Channel B – 300m Resolution
Arizona / El Paso – L-band H-H with STC
Negative

780503
Geology 78 – Grand Canyon – Special Processing – Channel B – 300m Resolution
Amboy Crater / Flagstaff – L-band H-H with STC
Negative

780508
Geology 78 – Grand Canyon – Special Processing – Channel B – 300m Resolution
Amboy Crater / Flagstaff / Run 1: L-band V-V with HTC / Runs 2-13: H-H with STC
Negative

780508
Geology 78 – Grand Canyon – Special Processing – Channel B – 300m Resolution
Amboy Crater / Flagstaff / Death Valley / Grand Canyon – Runs 1-2: L-band H-H with STC / Run 3: V-V with STC
Negative

780512
Geology 78 – Grand Canyon – Special Processing – Channel B – 300m Resolution
Amboy Crater / Flagstaff / Death Valley / Grand Canyon – L-band H-H with STC
Negative

780512
Geology 78 – Grand Canyon – Special Processing – Channel B – 300m Resolution
Grand Canyon / Death Valley – Runs 1-2, 5-6: L-band H-H with STC / Runs 3-4: X-band H-H with no STC
Negative

BOX C-2 (9 of 19) **AIDJEX / Winter Experiment / Geology 1978 / Guatemala (Geology 1978) / Alaska 1978**

Roll 17

780412
Geology 78 – Grand Canyon – Special Processing – Channel D – 50m Resolution
Runs 1-9, 12-23: L-band with STC / Run 10: H-H & V-V / Run 11: V-V
Negative

780412
Geology 78 – Grand Canyon – Special Processing – Channel D – 50m Resolution
Arizona / El Paso – L-band H-H with STC
Negative

780503
Geology 78 – Grand Canyon – Special Processing – Channel D – 50m Resolution
Amboy Crater / Flagstaff – L-band H-H with STC
Negative

780508
Geology 78 – Grand Canyon – Special Processing – Channel D – 50m Resolution
Amboy Crater / Flagstaff – Run 1: L-band V-V with HTC / Runs 2-13: H-H with STC
Negative

780508
Geology 78 – Grand Canyon – Special Processing – Channel D – 50m Resolution
Amboy Crater / Flagstaff / Death Valley / Grand Canyon – Runs 1-2: L-band H-H with STC / Run 3: V-V with STC
Negative

780512
Geology 78 – Grand Canyon – Special Processing – Channel D – 50m Resolution
Amboy Crater / Flagstaff / Death Valley / Grand Canyon – L-band H-H with STC
Negative

780512
Geology 78 – Grand Canyon – Special Processing – Channel D – 50m Resolution
Grand Canyon / Death Valley – Runs 1-2, 5-6: L-band H-H with STC / Runs 3-4: X-band H-H with no STC
Negative

Roll 18

780412
Geology 78 – Grand Canyon – Special Processing – Channel D – 300m Resolution
Runs 1-9, 12-23: L-band with STC / Run 10: H-H & V-V / Run 11: V-V
Negative

780412
Geology 78 – Grand Canyon – Special Processing – Channel D – 300m Resolution
Arizona / El Paso – L-band H-H with STC
Negative

780503
Geology 78 – Grand Canyon – Special Processing – Channel D – 300m Resolution
Amboy Crater / Flagstaff – L-band H-H with STC
Negative

780508
Geology 78 – Grand Canyon – Special Processing – Channel D – 300m Resolution
Amboy Crater / Flagstaff – Run 1: L-band V-V with HTC / Runs 2-13: H-H with STC
Negative

780508
Geology 78 – Grand Canyon – Special Processing – Channel D – 300m Resolution
Amboy Crater / Flagstaff / Death Valley / Grand Canyon – Runs 1-2: L-band H-H with STC / Run 3: V-V with STC
Negative

780512
Geology 78 – Grand Canyon – Special Processing – Channel D – 300m Resolution
Amboy Crater / Flagstaff / Death Valley / Grand Canyon – L-band H-H with STC
Negative

780512
Geology 78 – Grand Canyon – Special Processing – Channel D – 300m Resolution
Grand Canyon / Death Valley – Runs 1-2, 5-6: L-band H-H with STC / Runs 3-4: X-band H-H with no STC
Negative

Roll 19

780412
Geology 78 – Channel D – Part 1 of 4
Arizona / Mojave / Engineering: Various Runs – Runs 1-9, 12-23: L-band H-H with STC / Run 10: L-band H-H & V-V with STC / Run 11: L-band V-V with STC
Negative

780413
Geology 78 – Channel D – Part 1 of 4
Arkansas – L-band H-H with STC
Negative

Box 20

780421
Geology 78 – Channel A – Part 2 of 2
Covanosa / Ship Rock / Hot Creek Valley / Sierra Foothills – L-band H-V with STC
Negative

780501
Geology 78 – Channel A – Part 2 of 2
Runs 1,5; L-band H-V with STC / Runs 2-4: L-band H-V with no STC
Negative

780518
Geology 78 – Channel A – Part 2 of 2
Snake River / Mount Cooper – Runs 1-3: L-band V-H with STC / Run 4-7, 9-12: X-band H-H / Run 8: X-band H-H with no STC
Negative

780518-2
Geology 78 – Channel A – Part 2 of 2
Mount Cooper / Patrick Draw – Runs 1-3, 5-11: L-band H-V with STC / Runs 4, 12: X-band H-H with no STC
Negative

780519
Geology 78 – Channel A – Part 2 of 2
San Raphael – L-band V-H with STC
Negative

780519-2
Geology 78 – Channel A – Part 2 of 2
San Raphael – Runs 1-4: L-band V-H with STC / Runs 5-9: L-band H-V with STC
Negative

780519-3
Geology 78 – Channel A – Part 2 of 2
San Raphael / Lisbon Valley – Runs 1-8: L-band H-V w STC / Run 9: X-band H-H no STC
Negative

Roll 21

780503
Geology 78 – Channel A
Amboy Crater
Negative

Roll 22
(1 of 2)

780421
Geology 78 – Channel B – Part 3 of 4
Covanosa / Ship Rock / Hot Creek Valley / Sierra Foothills – L-band H-H with STC
Negative

780501
Geology 78 – Channel B – Part 3 of 4
Runs 1, 5: L-band H-H with STC / Runs 2-4: H-H with no STC
Negative

780503
Geology 78 – Channel B – Part 3 of 4
Amboy / Flagstaff – L-band H-H with STC

780503-2
Geology 78 – Channel B – Part 3 of 4
Flagstaff / Kel Baker – L-band H-H with STC
Negative

780508
Geology 78 – Channel B – Part 3 of 4
Amboy Crater / Grand Canyon – Run 1: L-band H-H with STC V-V / Runs 2-13: H-H w STC
Negative

780508
Geology 78 – Channel B – Part 3 of 4
Flagstaff / Kel Baker – Runs 1-2: L-band H-H with STC / Run 3: V-V with STC
Negative

780512
Geology 78 – Channel B – Part 3 of 4
Death Valley / Grand Canyon – L-band V-H with STC
Negative

780512
Geology 78 – Channel B – Part 3 of 4
Grand Canyon / Death Valley – Runs 1-10, 13-14: L-band H-H with STC / Runs 11-12: X-band H-H with no STC
Negative

Roll 22
(2 of 2)

780421
Geology 78 – Channel C – Part 2 of 2
Covanosa / Ship Rock / Hot Creek Valley / Sierra Foothills – L-band H-V with STC
Negative

780501
Geology 78 – Channel C – Part 2 of 2
Runs 1,5; L-band H-V with STC / Runs 2-4: L-band H-V with no STC
Negative

780518
Geology 78 – Channel C – Part 2 of 2
Snake River / Mount Cooper – Runs 1-3: L-band V-H with STC / Run 4-7, 9-12: X-band H-H / Run 8: X-band H-H with no STC
Negative

780518-2
Geology 78 – Channel C – Part 2 of 2
Mount Cooper / Patrick Draw – Runs 1-3, 5-11: L-band H-V with STC / Runs 4, 12: X-band H-H with no STC
Negative

780519
Geology 78 – Channel C – Part 2 of 2
San Raphael – L-band V-H with STC
Negative

780519-2
Geology 78 – Channel C – Part 2 of 2
San Raphael – Runs 1-4: L-band V-H with STC / Runs 5-9: L-band H-V with STC
Negative

780519-3
Geology 78 – Channel C – Part 2 of 2
San Raphael / Lisbon Valley – Runs 1-8: L-band H-V with STC / Run 9: X-band H-H with no STC
Negative

Roll 23

780421
Geology 78 – Channel D – Part 3 of 4
Covanosa / Ship Rock / Hot Creek Valley / Sierra Foothills – L-band H-H with STC
Negative

780501
Geology 78 – Channel D – Part 3 of 4
Runs 1, 5: L-band H-H with STC / Runs 2-4: H-H with no STC
Negative

780503
Geology 78 – Channel D – Part 3 of 4
Amboy / Flagstaff – L-band H-H with STC
Negative

780503-2
Geology 78 – Channel D – Part 3 of 4
Flagstaff / Kel Baker – L-band H-H with STC
Negative

780508
Geology 78 – Channel D – Part 3 of 4
Amboy Crater / Grand Canyon – Run 1: L-band H-H with STC V-V / Runs 2-13: H-H w STC
Negative

780508
Geology 78 – Channel D – Part 3 of 4
Flagstaff / Kel Baker – Runs 1-2: L-band H-H with STC / Run 3: V-V with STC
Negative

780512
Geology 78 – Channel D – Part 3 of 4
Death Valley / Grand Canyon – L-band V-H with STC
Negative

780512
Geology 78 – Channel D – Part 3 of 4
Grand Canyon / Death Valley – Runs 1-10, 13-14: L-band H-H with STC / Runs 11-12: X-band H-H with no STC
Negative

Roll 24
(1 of 3)

780518-1
Geology ’78 – Channel B – Part 4 of 4
12 Runs – L-band V-V with STC – Runs 1-3 / H-H with STC – Runs 4-12
Negative

780518-2
Geology ’78 – Channel B – Part 4 of 4
Mt. Coppert – Patrick Draw – 12 Runs – L-band H-H with STC / No Run IDs
Negative

780519-1
Geology ’78 – Channel B – Part 4 of 4
San Raphael – 4 Runs – L-band V-V with STC / No Run IDs
Negative

780519-2
Geology ’78 – Channel B – Part 4 of 4
9 Runs – L-band V-V with STC – Runs 1-4 / L-band H-H with STC – Runs 5-9
Negative

780519-3
Geology ’78 – Channel B – Part 4 of 4
San Raphael / Lisbon Valley – 9 Runs – L-band H-H with STC / No Run IDs
Negative

780520-1
Geology ’78 – Channel B – Part 4 of 4
Animas / Safford / Helvetia / Silver Bell / Yuma / 13 Runs
L-band H-H with STC – No Run IDs
Negative

780520-2
Geology ’78 – Channel B – Part 4 of 4
Pasadena / Santa Barbara – 13 Runs – L-band H-H with STC / No Run IDs
Negative

Roll 24
(2 of 3)

780518-1
Geology ’78 – Channel B – Part 4 of 4
12 Runs – L-band V-V with STC – Runs 1-3 / H-H with STC – Runs 4-12
Negative

780518-2
Geology ’78 – Channel B – Part 4 of 4
Mt. Coppert – Patrick Draw – 12 Runs – L-band H-H with STC / No Run IDs
Negative

780519-1
Geology ’78 – Channel B – Part 4 of 4
San Raphael – 4 Runs – L-band V-V with STC / No Run IDs
Negative

780519-2
Geology ’78 – Channel B – Part 4 of 4
9 Runs – L-band V-V with STC – Runs 1-4 / L-band H-H with STC – Runs 5-9
Negative

780519-3
Geology ’78 – Channel B – Part 4 of 4
San Raphael / Lisbon Valley – 9 Runs – L-band H-H with STC / No Run IDs
Negative

780520-1
Geology ’78 – Channel B – Part 4 of 4
Animas / Safford / Helvetia / Silver Bell / Yuma – 13 Runs
L-band H-H with STC / No Run IDs
Negative

780520-2
Geology ’78 – Channel B – Part 4 of 4
Pasadena / Santa Barbara – 13 Runs – L-band H-H with STC / No Run IDs
Negative

Roll 24
(3 of 3)

780518-1
Geology ’78 – Channel B – Part 4 of 4
12 Runs – L-band V-V with STC – Runs 1-3 / H-H with STC – Runs 4-12
Positive

780518-2
Geology ’78 – Channel B – Part 4 of 4
Mt. Coppert / Patrick Draw –12 Runs – L-band H-H with STC / No Run IDs
Positive

780519-1
Geology ’78 – Channel B – Part 4 of 4
San Raphael – 4 Runs – L-band V-V with STC / No Run IDs
Positive

780519-2
Geology ’78 – Channel B – Part 4 of 4
9 Runs – L-band V-V with STC – Runs 1-4 / L-band H-H with STC – Runs 5-9
Positive

780519-3
Geology ’78 – Channel B – Part 4 of 4
San Raphael / Lisbon Valley – 9 Runs – L-band H-H with STC / No Run IDs
Positive

780520-1
Geology ’78 – Channel B – Part 4 of 4
Animas / Safford / Helvetia / Silver Bell / Yuma – 13 Runs
L-band H-H with STC / No Run IDs
Positive

780520-2
Geology ’78 – Channel B – Part 4 of 4
Pasadena / Santa Barbara –13 Runs – L-band H-H with STC / No Run IDs
Positive

Roll 25

780518-1
Geology ’78 – Channel D – Part 4 of 4
Snake River / Mt. Coppert – 13 Runs
L-band V-V with STC – Runs 1-3 / H-H with STC – Runs 4-13
Negative

780518-2
Geology ’78 – Channel D – Part 4 of 4
Mt. Coppert / Patrick Draw – 11 Runs – L-band H-H with STC / No Run IDs
Negative

780519-1
Geology ’78 – Channel D – Part 4 of 4
San Raphael – 4 Runs – L-band V-V with STC / No Run IDs
Negative

780519-2
Geology ’78 – Channel D – Part 4 of 4
San Raphael – 4 Runs
L-band V-V with STC – Runs 1-4 / L-band H-H with STC – Runs 5-9
Negative

780519-3
Geology ’78 – Channel D – Part 4 of 4
San Raphael / Lisbon Valley – 9 Runs
L-band H-H with STC / No Run IDs
Negative

780520-1
Geology ’78 – Channel D – Part 4 of 4
Animas / Safford / Helvetia / Silver Bell / Yuma – 13 Runs
L-band H-H with STC / No Run IDs
Negative

780520-2
Geology ’78 – Channel D – Part 4 of 4
Pasadena / Santa Barbara – 13 Runs – L-band H-H with STC / No Run IDs
Negative

Roll 26

780412-1
JPL Geology – El Paso, Amboy Crater, Flagstaff, Kel-Baker, Grand Canyon, Death Valley
Channel B – JPL Arizona Geology – Runs 15-23 Only – L-band H-H with STC
Negative

780412-2
JPL Geology – El Paso, Amboy Crater, Flagstaff, Kel-Baker, Grand Canyon, Death Valley
Channel B – Arizona & El Paso Geology – 14 Runs – L-band H-H with STC
Negative

780503-1
JPL Geology – El Paso, Amboy Crater, Flagstaff, Kel-Baker, Grand Canyon, Death Valley
Channel B – Amboy Crater, Flagstaff – 13 Runs – L-band H-H with STC
Negative

780503-2
JPL Geology – El Paso, Amboy Crater, Flagstaff, Kel-Baker, Grand Canyon, Death Valley
Channel B – Flagstaff, Kel-Baker – 4 Runs – L-band H-H with STC
Negative

780508-1
JPL Geology – El Paso, Amboy Crater, Flagstaff, Kel-Baker, Grand Canyon, Death Valley
Channel B – Amboy Crater, Flagstaff – 13 Runs
L-band V-V with STC – Run 1 / H-H with STC – Runs 2-13
Negative

780508-2
JPL Geology – El Paso, Amboy Crater, Flagstaff, Kel-Baker, Grand Canyon, Death Valley
Channel B – Grand Canyon, Death Valley – 3 Runs
L-band H-H with STC – Runs 1-2 / V-V with STC – Run 3
Negative

780512-1
JPL Geology – El Paso, Amboy Crater, Flagstaff, Kel-Baker, Grand Canyon, Death Valley
Channel B – JPL Geology – Grand Canyon / Death Valley – 14 Runs
L-band H-H with STC
Negative

780512-2
JPL Geology – El Paso, Amboy Crater, Flagstaff, Kel-Baker, Grand Canyon, Death Valley
Channel B – Grand Canyon / Death Valley – 14 Runs
L-band H-H with STC – Runs 1-10, 13, 14 / X-band H-H no STC – Runs 11-12
Negative

Roll 27 780414-1
Geology ’78 Guatemala Channel A
Tikal – 13 Runs – X-band V-V no STC Runs 1-2 / X-band H-H with STC Runs 3-13
Negative

Roll 28 [Missing]

BOX C-3 (10 of 19) **AIDJEX / Winter Experiment / Geology 1978 / Guatemala (Geology 1978) / Alaska 1978**

Roll 29 780414-1
Guatemala Channel B Recorrelated (2 of 2)
13 Runs – L-band H-H with STC
Negative

780417-2
Guatemala Channel B Recorrelated (2 of 2)
Tikal / Mirador – 7 Runs – L-band H-H with STC
Negative

780417-3
Guatemala Channel B Recorrelated (2 of 2)
Geology ’78 – 5 Runs – L-band H-H with STC
Negative

780418-1
Guatemala Channel B Recorrelated (2 of 2)
Archaeology #3 / Lake Isabela – 7 Runs – L-band H-H with STC
Negative

780418-2
Guatemala Channel B Recorrelated (2 of 2)
Geology ’78 / Archaeology #3 / Lake Isabela – 5 Runs – L-band H-H with STC
Negative

780419-1
Guatemala Channel B Recorrelated (2 of 2)
Geology ’78 / Archaeology #4 / Guatemala / Volcano Fuego
3 Runs – L-band H-H with STC
Negative

780419-2
Guatemala Channel B Recorrelated (2 of 2)
Geology ’78 / Archaeology #4 / Guatemala / Volcano Fuego
8 Runs – L-band H-H with STC
Negative

780420-1
Guatemala Channel B Recorrelated (2 of 2)
Geology ’78 / Archaeology #4 / Guatemala / Flores Airstrip / Tikal / Merida
3 Runs – L-band H-H with STC
Negative

Roll 30

780414-1
Guatemala Channel B (2 of 2, Recorrelated)
13 Runs – L-band H-H with STC
Negative

780417-2
Guatemala Channel B (2 of 2, Recorrelated)
7 Runs – L-band H-H with STC
Negative

780417-2
Guatemala Channel B (2 of 2, Recorrelated)
Tikal / Mirador – 7 Runs – L-band H-H with STC
Negative

780417-3B
Guatemala Channel B (2 of 2, Recorrelated)
Tikal – 5 Runs – L-band H-H with STC
Negative

780417-3
Guatemala Channel B (2 of 2, Recorrelated)
Geology ‘78 – 5 Runs – L-band H-H with STC
Negative

780418-1
Guatemala Channel B (2 of 2, Recorrelated)
Archaeology #3 / Lake Isabela – 7 Runs – L-band H-H with STC
Negative

780418-2
Guatemala Channel B (2 of 2, Recorrelated)
Geology ’78 / Archaeology #3 / Lake Isabela – 5 Runs – L-band H-H with STC
Negative

780419-1
Guatemala Channel B (2 of 2, Recorrelated)
Geology ’78 / Archaeology #4 / Guatemala / Volcano Fuego
3 Runs – L-band H-H with STC
Negative

780419-2
Guatemala Channel B (2 of 2, Recorrelated)
Geology ’78 / Archaeology #4 / Guatemala / Volcano Fuego
8 Runs – L-band H-H with STC
Negative

Roll 31

780418-2
Geology ’78 Channel C Recorrelated
Geology ’78 / Archaeology #3 / Lake Isabela – 6 Runs – L-band H-V with STC / No Run IDs
Negative

780419-1
Geology ’78 Channel C Recorrelated
Geology ’78 / Archaeology #4 / Guatemala / Volcano Fuego
3 Runs – L-band H-V with STC / No Run IDs
Negative

780419-2
Geology ’78 Channel C Recorrelated
Geology ’78 / Archaeology #4 / Guatemala / Volcano Fuego
9 Runs – L-band H-V with STC / No Run IDs
Negative

780420-1
Geology ’78 Channel C Recorrelated
Geology ’78 / Archaeology #5 / Flores Airstrip / Tikal / Merida
8 Runs – L-band H-V with STC / No Run IDs
Negative

Roll 32

780414-1
Guatemala Channel D
13 Runs – L-band H-H with STC
Negative

780417-2
Guatemala Channel D
7 Runs – L-band H-H with STC
Negative

780417-2
Guatemala Channel D
Tikal / Mirador – 7 Runs – L-band H-H with STC
Negative

780417-3B
Guatemala Channel D
Tikal – 5 Runs – L-band H-H with STC
Negative

780417-3
Guatemala Channel D
Geology ‘78 – 5 Runs – L-band H-H with STC
Negative

780418-1
Guatemala Channel D
Archaeology #3 / Lake Isabela – 7 Runs – L-band H-H with STC
Negative

780418-2
Guatemala Channel D
Geology ’78 / Archaeology #3 / Lake Isabela – 5 Runs – L-band H-H with STC
Negative

780419-1
Guatemala Channel D
Geology ’78 / Archaeology #4 / Guatemala / Volcano Fuego
3 Runs – L-band H-H with STC
Negative

780419-2
Guatemala Channel D
Geology ’78 / Archaeology #4 / Guatemala / Volcano Fuego
8 Runs – L-band H-H with STC
Negative

Roll 33

780414-1
Guatemala Channel D Positive Transparency
13 Runs – L-band H-H with STC
Positive

780417-2
Guatemala Channel D Positive Transparency
7 Runs – L-band H-H with STC
Positive

780417-2
Guatemala Channel D Positive Transparency
Tikal / Mirador – 7 Runs – L-band H-H with STC
Positive

780417-3B
Guatemala Channel D Positive Transparency
Tikal – 5 Runs – L-band H-H with STC
Positive

780417-3
Guatemala Channel D Positive Transparency
Geology ‘78 – 5 Runs – L-band H-H with STC
Positive

780418-1
Guatemala Channel D Positive Transparency
Archaeology #3 / Lake Isabela – 7 Runs – L-band H-H with STC
Positive

780419-1
Guatemala Channel D Positive Transparency
Geology ’78 / Archaeology #4 / Guatemala / Volcano Fuego
3 Runs – L-band H-H with STC
Positive

780419-2
Guatemala Channel D Positive Transparency
Geology ’78 / Archaeology #4 / Guatemala / Volcano Fuego
8 Runs – L-band H-H with STC
Positive

Roll 34

780414-1
Guatemala Channel D Recorrelated
13 Runs – L-band H-H with STC
Negative

780417-2
Guatemala Channel D Recorrelated
Tikal / Mirador – 7 Runs
Negative

780418-1
Guatemala Channel D Recorrelated
Archaeology #3 / Lake Isabela – 7 Runs
Negative

780418-2
Guatemala Channel D Recorrelated
Geology ’78 / Archaeology #3 / Lake Isabela – 5 Runs
Negative

780419-1
Guatemala Channel D Recorrelated
Geology ’78 / Archaeology #4 / Guatemala / Volcano Fuego – 3 Runs
Negative

780419-2
Guatemala Channel D Recorrelated
Geology ’78 / Archaeology #4 / Guatemala / Volcano Fuego – 8 Runs
Negative

780420-1
Guatemala Channel D Recorrelated
Geology ’78 / Archaeology #4 / Guatemala / Flores Airstrip / Tikal / Merida – 8 Runs
Negative

Roll 35
(1 of 2)

780414-1
Guatemala Channel B Positive Transparency
Tikal – 14 Runs – L-band H-H with STC
Positive

780417-2
Guatemala Channel B Positive Transparency
Tikal / Mirador – 7 Runs – L-band H-H with STC / No Run IDs
Positive

780417-3
Guatemala Channel B Positive Transparency
Geology ’78 – Archaeology #2 – Guatemala/Tikal
6 Runs – L-band H-H with STC / No Run IDs
Positive

780418-1
Guatemala Channel B Positive Transparency
Geology ’78 – Archaeology #3 – Lake Isabela
7 Runs – L-band H-H with STC / No Run IDs
Positive

780418-2
Guatemala Channel B Positive Transparency
Geology ’78 – Archaeology #3 – Lake Isabela
6 Runs – L-band H-H with STC / No Run IDs
Positive

Roll 35
(2 of 2)

780414-1
Guatemala Channel B Positive Transparency
Tikal – 14 Runs / L-band H-H with STC
Positive

780417-2
Guatemala Channel B Positive Transparency
Tikal / Mirador – 7 Runs / L-band H-H with STC / No Run IDs
Positive

780417-3
Guatemala Channel B Positive Transparency
Geology ’78 – Archaeology #2 – Guatemala/Tikal
6 Runs – L-band H-H with STC / No Run IDs
Positive

780418-1
Guatemala Channel B Positive Transparency
Geology ’78 – Archaeology #3 – Lake Isabela
7 Runs – L-band H-H with STC / No Run IDs
Positive

780418-2
Guatemala Channel B Positive Transparency
Geology ’78 – Archaeology #3 – Lake Isabela
6 Runs – L-band H-H with STC / No Run IDs
Positive

Roll 36

780712-1
Alaska ’78 – Channel A
Pipeline / Lakes / Burned Area – 8 Runs – L-band H-V with STC
Negative

780717-2
Alaska ’78 – Channel A
Fish Creek / Duck Island / Pipeline – 5 Runs – L-band H-V with STC
Negative

Roll 37

780630-1
Alaska Hydrology ’78 – Channel B
Local Test Flight – 6 Runs – L-band H-H with STC Runs 1, 2, 4, 6 / V-V with STC Run 3
Negative

780711-1
Alaska Hydrology ’78 – Channel B
Bering Glacier / Mt. Wrangell – 10 Runs – L-band H-H with STC
Negative

780712-1
Alaska Hydrology ’78 – Channel B
Pipeline / Lakes / Burned Areas – 8 Runs – L-band H-H with STC
Negative

780712-2
Alaska Hydrology ’78 – Channel B
Fish Creek / Duck Island / Pipeline – 5 Runs – L-band H-H with STC
Negative

780713-1
Alaska Hydrology ’78 – Channel B
Mt. Wrangell – 6 Runs – L-band H-H with STC
Negative

Roll 38

780630-1
Alaska Hydrology ’78 – Channel C
Local Test Flight – 6 Runs – L-band H-V with STC
Negative

780711-1
Alaska Hydrology ’78 – Channel C
Bering Glacier / Mt. Wrangell – 10 Runs – L-band H-V with STC
Negative

780712-1
Alaska Hydrology ’78 – Channel C
Pipeline / Lakes / Burned Areas – 8 Runs – L-band H-V with STC
Negative

780712-2
Alaska Hydrology ’78 – Channel C
Fish Creek / Duck Island / Pipeline – 5 Runs – L-band H-V with STC
Negative

780713-1
Alaska Hydrology ’78 – Channel C
Mt. Wrangell – 6 Runs – L-band H-V with STC
Negative

Roll 39

780630-1
Alaska Hydrology ’78 – Channel D
Local Test Flight – 6 Runs – L-band H-H with STC Runs 1, 2, 4, 6 / V-V with STC Run 3
Negative

780711-1
Alaska Hydrology ’78 – Channel D
Bering Glacier / Mt. Wrangell – 10 Runs – L-band H-H with STC
Negative

780712-1
Alaska Hydrology ’78 – Channel D
Pipeline / Lakes / Burned Areas – 8 Runs – L-band H-H with STC
Negative

780712-2
Alaska Hydrology ’78 – Channel D
Fish Creek / Duck Island / Pipeline – 5 Runs – L-band H-H with STC
Negative

780713-1
Alaska Hydrology ’78 – Channel D
Mt. Wrangell – 6 Runs – L-band H-H with STC
Negative

BOX D-1 (11 OF 19) **AIDJEX / Winter Experiment / Geology 1978 / Guatemala (Geology 1978) / Alaska 1978**

Roll 1
770906-2
Geology ’77 – 770906-2 – Channel B – Extended Swath
Engineering Transit / Scabland / Mt. Hood – 10 Runs – L-band H-H with STC
Positive

Roll 2
770906-2
Geology ’77 – 770906-2 – Channel C – Extended Swath
Engineering Transit / Scabland / Mt. Hood – 10 Runs
X-band H-H with STC – Run 1 / H-H no STC – Run 2 / L-band H-V with STC – Runs 3-10
Positive

Roll 3
770906-2
Geology ’77 – 770906-2 – Channel D – Extended Swath
Engineering Transit / Scabland / Mt. Hood – 10 Runs – L-band H-H with STC
Positive

Roll 4
770927-3
Geology ’77 – 770927-3 – Channel A
Scabland / Mt. Hood / Mt. Lassen – 10 Runs
L-band H-V with STC – Runs 1-9 / X-band H-H with STC
Positive

Roll 5
771024-1
Temporary Roll Guatemala – Channel C – X-band – No Run IDs
Negative

771025-1
Temporary Roll Guatemala – Channel C – X-band – No Run IDs
Negative

771025-2
Temporary Roll Guatemala – Channel C – X-band – No Run IDs
Negative

Roll 6
770809-2
Hurricane II – Channel A – Part 1
JPL Overflights – L-band H-H with STC / No Run IDs
Negative

770811-1
Hurricane II – Channel A – Part 1
Arizona – 14 Runs – X-band H-H with STC – Runs 1-3 / L-band H-V with STC – Runs 4-14
Negative

770811-2
Hurricane II – Channel A – Part 1
Arizona / Mojave / Big Sur Fire – 9 Runs – L-band H-V with STC / No Run IDs
Negative

770817-1
Hurricane II – Channel A – Part 1
Southern California Flood Assessment – 11 Runs – X-band H-H with STC, No Run IDs
Negative

770825-1
Hurricane II – Channel A – Part 1
Snake River Plain – 6 Runs – L-band H-V with STC / No Run IDs
Negative

770830-1
Hurricane II – Channel A – Part 1
No Run IDs / No Documentation
Negative

770830-2
Hurricane II – Channel A – Part 1
Indio / Arizona – 8 Runs
L-band H-V with STC – Runs 1, 2, 4-6 / X-band H-H with STC – Runs 3, 7-8
Negative

770830-3
Hurricane II – Channel A – Part 1
Salton Sea to Riverside / Transit to NUQ – 3 Runs
L-band H-V with STC / X-band H-H no STC
Negative

770906-1
Hurricane II – Channel A – Part 1
Snake River – 2 Runs – X-band H-H no STC – Run 1 / L-band H-V with STC – Run 2
Negative

770906-2
Hurricane II – Channel A – Part 1
Snake River / Engineering Transit / Scabland – 8 Runs
L-band H-V with STC / Runs 1-3, 7-8 – X-band H-H no STC – Runs 4-6
Negative

770906-3
Hurricane II – Channel A – Part 1
Scabland / Mt. Hood / Mt. Lassen Pass – 10 Runs
L-band H-V with STC / Runs 1-9 – X-band H-H with and without STC – Run 10
Negative

770914-1
Hurricane II – Channel A – Part 1
Dodge City / Oklahoma City – 3 Runs – X-band H-H with STC / No Run IDs
Negative

770915-1
Hurricane II – Channel A – Part 1
Powder River – 4 Runs – L-band H-V with STC / No Run IDs
Negative

770915-2
Hurricane II – Channel A – Part 1
Powder River / Black Hills – 8 Runs – L-band H-V with STC
Negative

Roll 7

770809-1
Hurricane II – Channel B – Part 1
JPL Overflights – 3 Runs – L-band H-H with STC / No Run IDs
Negative

770809-2
Hurricane II – Channel B – Part 1
JPL Overflights – 14 Runs – L-band H-H with STC / No Run IDs
Negative

770811-1
Hurricane II – Channel B – Part 1
Arizona – L-band H-H with STC / No Run IDs
Negative

770811-2
Hurricane II – Channel B – Part 1
Arizona / Mojave / Big Sur Fire – 9 Runs –L-band H-H with STC / No Run IDs
Negative

770817-1
Hurricane II – Channel B – Part 1
Southern California Flood Assessment – 11 Runs – L-band H-H with STC / No Run IDs
Negative

770825-1
Hurricane II – Channel B – Part 1
Snake River Plain – 6 Runs – L-band H-H with STC / No Run IDs
Negative

770830-1
Hurricane II – Channel B – Part 1
Barstow / Indio – 10 Runs – L-band H-H with STC / No Run IDs
Negative

770830-2
Hurricane II – Channel B – Part 1
Indio / Arizona – 8 Runs – L-band H-H with STC / No Run IDs
Negative

770830-3
Hurricane II – Channel B – Part 1
Salton Sea to Riverside / Transit to NUQ – 3 Runs – L-band H-H with STC / No Run IDs
Negative

770906-1
Hurricane II – Channel B – Part 1
Snake River – 2 Runs – L-band H-H with STC / No Run IDs
Negative

770906-2
Hurricane II – Channel B – Part 1
Snake River / Engineering Transit / Scabland – 8 Runs
L-band H-H with STC / No Run IDs
Negative

770906-3
Hurricane II – Channel B – Part 1
Scabland / Mt. Hood / Mt. Lassen Pass – 10 Runs
L-band H-H with STC / No Run IDs
Negative

770914-1
Hurricane II – Channel B – Part 1
Dodge City / Oklahoma City – 3 Runs – L-band V-V with STC / No Run IDs
Negative

770915-1
Hurricane II – Channel B – Part 1
Powder River – 4 Runs – L-band V-V with STC – No Run IDs
Negative

770915-2
Hurricane II – Channel B – Part 1
Powder River / Black Hills – 8 Runs – L-band V-V with STC – No Run IDs
Negative

Roll 8

770811-1
Hurricane II – Channel C – Part 1
Arizona – 20 Runs – L-band H-V with STC / No Run IDs
Negative

770811-2
Hurricane II – Channel C – Part 1
Mohave / Big Sur Fire – 2 Runs – L-band H-V with STC / No Run IDs
Negative

770825-1
Hurricane II – Channel C – Part 1
Snake River Plain – 5 Runs – L-band H-V with STC / No Run IDs
Negative

770825-2
Hurricane II – Channel C – Part 1
Snake River Plain – 8 Runs – L-band H-V with STC / No Run IDs
Negative

770830-1
Hurricane II – Channel C – Part 1
Barstow / Indio – 10 Runs – L-band H-V with STC / No Run IDs
Negative

770830-2
Hurricane II – Channel C – Part 1
Indio / Arizona – 10 Runs – L-band H-V with STC , Runs 1-2, 4-6, 9-10 / X-band H-H with STC, Runs 3, 7-8
Negative

770906-1
Hurricane II – Channel C – Part 1
Snake River / Engineering Transit – 6 Runs – X-band H-H no STC, Runs 1-6 / L-band H-V with STC, Runs 2-5
Negative

770906-2
Hurricane II – Channel C – Part 1
Engineering Transit / Scabland / Mt. Hood – 10 Runs – X-band H-H with STC, Run 1 / No STC, Run 2 / L-band H-V with STC, Runs 3-10
Negative

770906-3
Hurricane II – Channel C – Part 1
Transit to Mt. Lassen Pass – 4 Runs – L-band H-V with STC, Runs 1-3 / X-band H-H with and without STC, Run 4
Negative

770912-1
Hurricane II – Channel C – Part 1
Texas / Oklahoma / Colorado – 4 Runs – L-band H-V with STC / No Run IDs
Negative

770915-1
Hurricane II – Channel C – Part 1
Powder River / Black Hills – 7 Runs – L-band H-V with STC / No Run IDs
Negative

770915-2
Hurricane II – Channel C – Part 1
Black Hills – 5 Runs – L-band H-V with STC / No Run IDs
Negative

770916-1
Hurricane II – Channel C – Part 1
Dodge City / Topeka / Transit – 3 Runs – X-band H-H with STC / No Run IDs
Negative

770927-1
Hurricane II – Channel C – Part 1
Grand Canyon – 8 Runs – L-band H-V with STC / No Run IDs
Negative

770927-2
Hurricane II – Channel C – Part 1
Grand Canyon / 29 Palms / Needles – 4 Runs – L-band H-V with STC / No Run IDs
Negative

770929-1
Hurricane II – Channel C – Part 1
Crescent Valley / Transit / Moab – 5 Runs – L-band H-V with STC / No Run IDs
Negative

770929-2
Hurricane II – Channel C – Part 1
Moab / Engineering Data – L-band H-V with STC, Runs 1-7 / No Data, Run 8 / X-band H-H no STC, Run 9
Negative

Roll 9

770811-1
Hurricane II – Channel D – Part 1
Arizona – 20 Runs – No Data, Runs 1-2 / L-band H-H with STC, Runs 3-20
Negative

770811-2
Hurricane II – Channel D – Part 1
Mojave / Big Sur Fire – 2 Runs – L-band H-H with STC, Run 1 / X-band H-H w STC, Run 2
Negative

770825-1
Hurricane II – Channel D – Part 1
Snake River Plain – 5 Runs – L-band H-H with STC / No Run IDs
Negative

770825-2
Hurricane II – Channel D – Part 1
Snake River Plain – 8 Runs – L-band H-H with STC, Runs 1-5, 7 / X-band H-H with STC, Runs 6,8
Negative

770830-1
Hurricane II – Channel D – Part 1
Barstow / Indio – 10 Runs – L-band H-H with STC / No Run IDs
Negative

770830-2
Hurricane II – Channel D – Part 1
Indio / Arizona – 10 Runs – L-band H-H with STC / No Run IDs
Negative

770906-1
Hurricane II – Channel D – Part 1
Snake River / Engineering Transit – 6 Runs – L-band H-H with STC / No Run IDs
Negative

770906-2
Hurricane II – Channel D – Part 1
Engineering Transit / Scabland / Mt. Hood – 10 Runs – L-band H-H with STC / No Run IDs
Negative

770906-3
Hurricane II – Channel D – Part 1
Transit to Mt. Lassen Pass – 4 Runs – L-band H-H with STC / No Run IDs
Negative

770912-1
Hurricane II – Channel D – Part 1
Texas / Oklahoma / Colorado – 4 Runs – L-band H-H with STC / No Run IDs
Negative

770915-1
Hurricane II – Channel D – Part 1
Powder River / Black Hills – 7 Runs – L-band V-V with STC / No Run IDs
Negative

770915-2
Hurricane II – Channel D – Part 1
Black Hills – 5 Runs – L-band V-V with STC / No Run IDs
Negative

770916-1
Hurricane II – Channel D – Part 1
Dodge City / Topeka / Transit – 3 Runs – L-band V-V with STC / No Run IDs
Negative

Roll 10

770918-3
Hurricane II – Channel A – Part 2
Texas – 1 Run – X-band H-H with STC
Negative

770919-1
Hurricane II – Channel A – Part 2
Powder River / Transit to NUQ – 4 Runs – X-band H-H with STC
Negative

770927-1
Hurricane II – Channel A – Part 2
Grand Canyon #1 – 1 Run – L-band H-V with STC
Negative

770927-2
Hurricane II – Channel A – Part 2
Grand Canyon #2-#9 – 8 Runs – L-band H-V with STC
Negative

770927-3
Hurricane II – Channel A – Part 2
Grand Canyon #10 / 29 Palms / Needles – 3 Runs – L-band H-V with STC
Negative

770929-1
Hurricane II – Channel A – Part 2
Crescent Valley / Transit / Moab – 6 Runs – L-band H-V with STC
Negative

770929-2
Hurricane II – Channel A – Part 2
Moab / Engineering Data – 8 Runs – L-band H-V with STC, Runs 1-6 / No Data, Run 7 / X-band H-H with STC, Run 8
Negative

771024-1
Hurricane II – Channel A – Part 2
Guatemala – 6 Runs – X-band H-H with STC, Runs 1-2, 4-6 / L-band H-V with STC, Run 3
Negative

771025-1
Hurricane II – Channel A – Part 2
Guatemala – 8 Runs – X-band H-H with STC
Negative

771025-2
Hurricane II – Channel A – Part 2
Guatemala (including Tikal) – 12 Runs
Negative

Roll 11

770817-1
Hurricane II – Channel B – Positive Roll
Southern California Flood Assessment / Big Sur Fire
11 Runs – L-band H-H with STC / No Run IDs
Negative

770825-1
Hurricane II – Channel B – Positive Roll
Snake River Plain – 6 Runs – L-band H-H with STC / No Run IDs
Negative

770830-1
Hurricane II – Channel B – Positive Roll
Barstow / Indio – 10 Runs – L-band H-H with STC / No Run IDs
Negative

770830-2
Hurricane II – Channel B – Positive Roll
Indio / Arizona – 8 Runs – L-band H-H with STC / No Run IDs
Negative

770830-3
Hurricane II – Channel B – Positive Roll
Salton Sea to Riverside / Transit to NUQ – 4 Runs – L-band H-H with STC / No Run IDs
Positive

770906-1
Hurricane II – Channel B – Positive Roll
Snake River – 2 Runs – L-band H-H with STC / No Run IDs
Positive

770906-2
Hurricane II – Channel B – Positive Roll
Snake River / Engineering Transit / Scabland – 8 Runs
L-band H-H with STC / No Run IDs
Positive

Roll 12

770918-3
Hurricane II – Channel B – Part 2
Texas – 1 Run – L-band H-H with STC
Negative

770919-1
Hurricane II – Channel B – Part 2
Powder River / Transit to NUQ – 4 Runs – L-band H-H with STC
Negative

770927-1
Hurricane II – Channel B – Part 2
Grand Canyon #1 – 1 Run – L-band H-H with STC
Negative

770927-2
Hurricane II – Channel B – Part 2
Grand Canyon #2-#9 – 8 Runs – L-band H-H with STC
Negative

770927-3
Hurricane II – Channel B – Part 2
Grand Canyon #10 / 29 Palms / Needles – 3 Runs – L-band H-H with STC
Negative

770929-1
Hurricane II – Channel B – Part 2
Crescent Valley / Transit / Moab – 6 Runs – L-band H-H with STC
Negative

770929-2
Hurricane II – Channel B – Part 2
Moab / Engineering Data – 8 Runs – L-band H-V with STC, Runs 1-6 / L-band Calibration Auto Sequence, Runs 7-8
Negative

771024-1
Hurricane II – Channel B – Part 2
Guatemala – 6 Runs – X-band H-H with STC, Runs 1-2, 4-6 / L-band H-V with STC, Run 3
Negative

771025-1
Hurricane II – Channel B – Part 2
Guatemala – 8 Runs – L-band H-H with STC
Negative

771025-2
Hurricane II – Channel B – Part 2
Guatemala (including Tikal) – 12 Runs – L-band H-H with STC
Negative

771031-1
Hurricane II – Channel B – Part 2
GASP / Van Overflight – 2 Runs – L-band H-H with STC, Runs 1-2
Negative

771031-2
Hurricane II – Channel B – Part 2
GASP / Nevada / Utah / California – 4 Runs – L-band H-H with STC
Negative

Roll 13

770927-1
Hurricane II – Channel D – Part 2
Grand Canyon #1-#8 – 8 Runs – L-band H-H with STC
Negative

770927-2
Hurricane II – Channel D – Part 2
Grand Canyon #9 / 29 Palms / Needles – 4 Runs – L-band H-H with STC
Negative

770929-1
Hurricane II – Channel D – Part 2
Crescent Valley / Transit / Moab – 5 Runs – L-band H-H with STC
Negative

770929-2
Hurricane II – Channel D – Part 2
Moab / Engineering Data – 8 Runs – L-band H-H with STC, Runs 1-7 / L-band Calibration Auto Sequence, Runs 8-9
Negative

771025-2
Hurricane II – Channel D – Part 2
Guatemala (including Tikal) – 12 Runs – L-band H-H with STC, Runs 1, 3-12 / VHF V-V, Run 2
Negative

771031-1
Hurricane II – Channel D – Part 2
GASP / Van Overflight – 2 Runs – L-band H-H with STC – Extended Swath
Negative

771031-2
Hurricane II – Channel D – Part 2
GASP – 4 Runs – L-band H-H with STC, Runs 1-4
Negative

Roll 14

770809-1
Extra Hurricane II – 2DN – Channel B
JPL Overflights – 3 Runs – L-band H-H with STC / No Run IDs
Negative

770809-2
Extra Hurricane II – 2DN – Channel B
JPL Overflights – 14 Runs – L-band H-H with STC / No Run IDs
Negative

770811-1
Extra Hurricane II – 2DN – Channel B
Arizona – L-band H-H with STC / No Run IDs
Negative

770811-2
Extra Hurricane II – 2DN – Channel B
Arizona / Mojave / Big Sur Fire – 9 Runs – L-band H-H with STC / No Run IDs
Negative

770906-3
Extra Hurricane II – 2DN – Channel B
Scabland / Mt. Hood / Mt. Lassen Pass – 10 Runs – L-band H-H with STC / No Run IDs
Negative

770914-1
Extra Hurricane II – 2DN – Channel B
Dodge City / Oklahoma City – 3 Runs – L-band V-V with STC / No Run IDs
Negative

770915-1
Extra Hurricane II – 2DN – Channel B
Powder River – 4 Runs – L-band V-V with STC / No Run IDs
Negative

770915-2
Extra Hurricane II – 2DN – Channel B
Powder River / Black Hills – 8 Runs – L-band V-V with STC / No Run IDs
Negative

770918-3
Extra Hurricane II – 2DN – Channel B
Texas – 1 Run – L-band H-H with STC
Negative

770919-1
Extra Hurricane II – 2DN – Channel B
Powder River / Transit to NUQ – 4 Runs – L-band H-H with STC
Negative

770927-1
Extra Hurricane II – 2DN – Channel B
Grand Canyon #1 – 1 Run – L-band H-H with STC
Negative

770927-2
Extra Hurricane II – 2DN – Channel B
Grand Canyon #2-#9 – 8 Runs – L-band H-H with STC
Negative

770927-3
Extra Hurricane II – 2DN – Channel B
Grand Canyon #10 / 29 Palms / Needles – 3 Runs – L-band H-H with STC
Negative

770929-1
Extra Hurricane II – 2DN – Channel B
Crescent Valley / Transit / Moab – 6 Runs – L-band H-H with STC
Negative

770929-2
Extra Hurricane II – 2DN – Channel B
Moab / Engineering Data – 8 Runs – L-band H-V with STC, Runs 1-6 / L-band Calibration Auto Sequence, Runs 7-8
Negative

771025-1
Extra Hurricane II – 2DN – Channel B
Guatemala – 8 Runs – L-band H-H with STC
Negative

771025-2
Extra Hurricane II – 2DN – Channel B
Guatemala (including Tikal) – 12 Runs – L-band H-H with STC
Negative

771031-1
Extra Hurricane II – 2DN – Channel B
GASP / Van Overflight – 2 Runs – L-band H-H with STC
Negative

771031-2
Extra Hurricane II – 2DN – Channel B
GASP / Nevada / Utah / California – 4 Runs – L-band H-H with STC
Negative

Roll 15

770906-1
Extra Hurricane II – 3DN – Channel D
Snake River / Engineering Transit – 6 Runs – L-band H-H with STC / No Run IDs
Negative

770906-3
Extra Hurricane II – 3DN – Channel D
Transit to Mt. Lassen Pass – 4 Runs – L-band H-H with STC / No Run IDs
Negative

770912-1
Extra Hurricane II – 3DN – Channel D
Texas / Oklahoma / Colorado – 4 Runs – L-band H-H with STC / No Run IDs
Negative

770927-1
Extra Hurricane II – 3DN – Channel D
Grand Canyon #1-#8 – 8 Runs – L-band H-H with STC
Negative

770927-2
Extra Hurricane II – 3DN – Channel D
Grand Canyon #9 / 29 Palms / Needles – 4 Runs – L-band H-H with STC
Negative

770929-1
Extra Hurricane II – 3DN – Channel D
Crescent Valley / Transit / Moab – 5 Runs – L-band H-H with STC
Negative

770929-2
Extra Hurricane II – 3DN – Channel D
Moab / Engineering Data – 8 Runs – L-band H-H with STC, Runs 1-7 / L-band Calibration Auto Sequence, Runs 8-9
Negative

771031-1
Extra Hurricane II – 3DN – Channel D
GASP / Van Overflight – 2 Runs – L-band H-H with STC – Extended Swath
Negative

771031-2
Extra Hurricane II – 3DN – Channel D
GASP – 4 Runs – L-band H-H with STC, Runs 1-4
Negative

BOX D-2 (12 OF 19) **AIDJEX / Winter Experiment / Geology 1978 / Guatemala (Geology 1978) / Alaska 1978**

Roll 16

770825-1
Hurricane II – Channel A – Extra Data
Snake River Plains – 6 Runs – L-band H-V with STC
Negative

770906-2
Hurricane II – Channel A – Extra Data
Snake River / Engineering Transit / Scabland – 8 Runs – L-band H-V with STC, Runs 1-3, 7-8 / L-band H-H no STC, Runs 4-6
Negative

770906-2
Hurricane II – Channel A – Extra Data
Snake River / Engineering Transit / Scabland – 8 Runs – L-band H-V with STC, Runs 1-3, 7-8 / L-band H-H no STC, Runs 4-6
Negative

770906-3
Hurricane II – Channel A – Extra Data
Scabland / Mt. Hood / Mt. Lassen Pass – 10 Runs – L-band H-V with STC, Runs 1-9 / X-band H-H with and without STC, Run 10
Negative

770906-3
Hurricane II – Channel A – Extra Data
Scabland / Mt. Hood / Mt. Lassen Pass – 10 Runs – L-band H-V with STC, Runs 1-9 / X-band H-H with and without STC, Run 10
Negative

770929-2
Hurricane II – Channel A – Extra Data
Moab / Engineering Run – 8 Runs – L-band H-V with STC, Runs 1-6 / No Data, Run 7 / X-band H-H with STC, Run 8
Negative

Roll 17

770825-1
Hurricane II – Channel B – Extra Data
Snake River Plains – 6 Runs – L-band H-H with STC
Negative

770830-3
Hurricane II – Channel B – Extra Data
Salton Sea to Riverside / Transit to NUQ – 3 Runs – L-band H-H with STC
Negative

770906-1
Hurricane II – Channel B – Extra Data
Snake River – 2 Runs – L-band H-H with STC
Negative

770906-2
Hurricane II – Channel B – Extra Data
Snake River / Engineering Transit / Scabland – 8 Runs – L-band H-H with STC
Negative

770906-3
Hurricane II – Channel B – Extra Data
Scabland / Mt. Hood / Mt. Lassen Pass – 10 Runs – L-band H-V with STC, Runs 1-9 / X-band H-H with and without STC, Run 10
Negative

770929-2
Hurricane II – Channel B – Extra Data
Moab / Engineering Run – 8 Runs – L-band H-H with STC, Runs 1-6 / L-band Calibration Sequence, Runs 7-8
Negative

771025-2
Hurricane II – Channel B – Extra Data
Guatemala (including Tikal) – L-band H-H with STC
Negative

Roll 18

770825-1
Hurricane II – Channel C – Extra Data
Snake River Plain – 5 Runs – L-band H-V with STC / No Run IDs
Negative

770825-2
Hurricane II – Channel C – Extra Data
Snake River Plain – 8 Runs – L-band H-V with STC / No Run IDs
Negative

770906-1
Hurricane II – Channel C – Extra Data
Snake River / Engineering Transit – 6 Runs – X-band H-H no STC, Runs 1-6 / L-band H-V with STC, Runs 2-5
Negative

770906-3
Hurricane II – Channel C – Extra Data
Transit to Mt. Lassen Pass – 4 Runs – L-band H-V with STC, Runs 1-3 / X-band H-H with and without STC, Run 4
Negative

770912-1
Hurricane II – Channel C – Extra Data
Texas / Oklahoma / Colorado – 4 Runs – L-band H-V with STC / No Run IDs
Negative

770906-3
Hurricane II – Channel C – Extra Data
Transit to Mt. Lassen Pass – 4 Runs – L-band H-V with STC, Runs 1-3 / X-band H-H with and without STC, Run 4
Negative

770912-1
Hurricane II – Channel C – Extra Data
Texas / Oklahoma / Colorado – 4 Runs – L-band H-V with STC / No Run IDs
Negative

Roll 19

770825-1
Hurricane II – Channel D – Extra Data
Snake River Plains – 6 Runs – L-band H-H with STC / Extended Swath for Run 1
Negative

770825-2
Hurricane II – Channel D – Extra Data
Snake River Plains – 8 runs – L-band H-H with STC, Runs 1-5, 7 / X-band H-H with STC
Negative

770906-1
Hurricane II – Channel D – Extra Data
Snake River / Engineering Transit – 5 Runs – Extended Swaths – L-band H-H with STC
Negative

770906-1
Hurricane II – Channel D – Extra Data
Snake River / Engineering Transit – 6 Runs – Extended Swaths – L-band H-H with STC
Negative

770906-3
Hurricane II – Channel D – Extra Data
Transit to Mt. Lasson / Mt. Lassen Pass – 4 Runs – L-band H-H with STC
Negative

770906-3
Hurricane II – Channel D – Extra Data
Transit to Mt. Lasson / Mt. Lassen Pass – 4 Runs – L-band H-H with STC
Negative

770912-1
Hurricane II – Channel D – Extra Data
Texas / Oklahoma / Colorado – 4 Runs – L-band H-H with STC
Negative

770912-1
Hurricane II – Channel D – Extra Data
Texas / Oklahoma / Colorado – 4 Runs – L-band H-H with STC
Negative

Roll 20

820610-0
1982 Summer Flights OR 102-4 – Channel A
Engineering Test Flight – No Run IDs
Negative

820616-0
1982 Summer Flights OR 102-4 – Channel A
Southern California Geology – No Run IDs
Negative

820617-0
1982 Summer Flights OR 102-4 – Channel A
Monterey Bay / Engineering Test – No Run IDs
Negative

820624-0
1982 Summer Flights OR 102-4 – Channel A
Montana Geology – No Run IDs
Negative

820626-0
1982 Summer Flights OR 102-4 – Channel A
Montana Geology – No Run IDs
Negative

820716-0
1982 Summer Flights OR 102-4 – Channel A
West Indies Geology– No Run IDs
Negative

820717-0
1982 Summer Flights OR 102-4 – Channel A
West Indies Geology– No Run IDs
Negative

820718-0
1982 Summer Flights OR 102-4 – Channel A
West Indies Geology– No Run IDs
Negative

820719-0
1982 Summer Flights OR 102-4 – Channel A
West Indies Geology– No Run IDs
Negative

820722-1
1982 Summer Flights OR 102-4 – Channel A
West Indies Geology– No Run IDs
Negative

820722-2
1982 Summer Flights OR 102-4 – Channel A
West Indies Geology– No Run IDs
Negative

820724-1
1982 Summer Flights OR 102-4 – Channel A
West Indies Geology– No Run IDs
Negative

820724-2
1982 Summer Flights OR 102-4 – Channel A
West Indies Geology– No Run IDs
Negative

820724-3
1982 Summer Flights OR 102-4 – Channel A
West Indies Geology– No Run IDs
Negative

820726-1
1982 Summer Flights OR 102-4 – Channel A
West Indies Geology– No Run IDs
Negative

Roll 21

820610-0
1982 Summer Flights OR 102-4 – Channel B
Engineering Test Flight – No Run IDs
Negative

820616-0
1982 Summer Flights OR 102-4 – Channel B
Southern California Geology – No Run IDs
Negative

820617-0
1982 Summer Flights OR 102-4 – Channel B
Monterey Bay / Engineering Test – No Run IDs
Negative

820624-0
1982 Summer Flights OR 102-4 – Channel B
Montana Geology – No Run IDs
Negative

820626-0
1982 Summer Flights OR 102-4 – Channel B
Montana Geology – No Run IDs
Negative

820716-0
1982 Summer Flights OR 102-4 – Channel B
West Indies Geology– No Run IDs
Negative

820717-0
1982 Summer Flights OR 102-4 – Channel B
West Indies Geology– No Run IDs
Negative

820718-0
1982 Summer Flights OR 102-4 – Channel B
West Indies Geology– No Run IDs
Negative

820719-0
1982 Summer Flights OR 102-4 – Channel B
West Indies Geology– No Run IDs
Negative

820722-1
1982 Summer Flights OR 102-4 – Channel B
West Indies Geology– No Run IDs
Negative

820722-2
1982 Summer Flights OR 102-4 – Channel B
West Indies Geology– No Run IDs
Negative

820724-1
1982 Summer Flights OR 102-4 – Channel B
West Indies Geology– No Run IDs
Negative

820724-2
1982 Summer Flights OR 102-4 – Channel B
West Indies Geology– No Run IDs
Negative

820724-3
1982 Summer Flights OR 102-4 – Channel B
West Indies Geology– No Run IDs
Negative

820726-1
1982 Summer Flights OR 102-4 – Channel B
West Indies Geology– No Run IDs
Negative

Roll 22

820610-0
1982 Summer Flights OR 102-5 – Channel A
Engineering Test Flight – No Run IDs
Negative

820616-0
1982 Summer Flights OR 102-5 – Channel A
Southern California Geology – No Run IDs
Negative

820617-0
1982 Summer Flights OR 102-5 – Channel A
Monterey Bay / Engineering Test – No Run IDs
Negative

820624-0
1982 Summer Flights OR 102-5 – Channel A
Montana Geology – No Run IDs
Negative

820626-0
1982 Summer Flights OR 102-5 – Channel A
Montana Geology – No Run IDs
Negative

820716-0
1982 Summer Flights OR 102-5 – Channel A
West Indies Geology– No Run IDs
Negative

820717-0
1982 Summer Flights OR 102-5 – Channel A
West Indies Geology– No Run IDs
Negative

820718-0
1982 Summer Flights OR 102-5 – Channel A
West Indies Geology– No Run IDs
Negative

820719-0
1982 Summer Flights OR 102-5 – Channel A
West Indies Geology– No Run IDs
Negative

820722-1
1982 Summer Flights OR 102-5 – Channel A
West Indies Geology– No Run IDs
Negative

820722-2
1982 Summer Flights OR 102-5 – Channel A
West Indies Geology– No Run IDs
Negative

820724-1
1982 Summer Flights OR 102-5 – Channel A
West Indies Geology– No Run IDs
Negative

820724-2
1982 Summer Flights OR 102-5 – Channel A
West Indies Geology– No Run IDs
Negative

820724-3
1982 Summer Flights OR 102-5 – Channel A
West Indies Geology– No Run IDs
Negative

820726-1
1982 Summer Flights OR 102-5 – Channel A
West Indies Geology– No Run IDs
Negative

Roll 23

820610-0
1982 Summer Flights OR 102-5 – Channel B
Engineering Test Flight – No Run IDs
Negative

820616-0
1982 Summer Flights OR 102-5 – Channel B
Southern California Geology – No Run IDs
Negative

820617-0
1982 Summer Flights OR 102-5 – Channel B
Monterey Bay / Engineering Test – No Run IDs
Negative

820624-0
1982 Summer Flights OR 102-5 – Channel B
Montana Geology – No Run IDs
Negative

820626-0
1982 Summer Flights OR 102-5 – Channel B
Montana Geology – No Run IDs
Negative

820716-0
1982 Summer Flights OR 102-5 – Channel B
West Indies Geology– No Run IDs
Negative

820717-0
1982 Summer Flights OR 102-5 – Channel B
West Indies Geology– No Run IDs
Negative

820718-0
1982 Summer Flights OR 102-5 – Channel B
West Indies Geology– No Run IDs
Negative

820719-0
1982 Summer Flights OR 102-5 – Channel B
West Indies Geology– No Run IDs
Negative

820722-1
1982 Summer Flights OR 102-5 – Channel B
West Indies Geology– No Run IDs
Negative

820722-2
1982 Summer Flights OR 102-5 – Channel B
West Indies Geology– No Run IDs
Negative

820724-1
1982 Summer Flights OR 102-5 – Channel B
West Indies Geology– No Run IDs
Negative

820724-2
1982 Summer Flights OR 102-5 – Channel B
West Indies Geology– No Run IDs
Negative

820724-3
1982 Summer Flights OR 102-5 – Channel B
West Indies Geology– No Run IDs
Negative

820726-1
1982 Summer Flights OR 102-5 – Channel B
West Indies Geology– No Run IDs
Negative

Roll 24 820616
Summer 1982 Flights OR 102-4 – Channel B – 1st Run / No Run IDs
Positive

Roll 25 820616
Summer 1982 Flights OR 102-4 – Channel B – 2nd Run / No Run IDs
Positive

Roll 26 830811-1
Summer 1983 Flights OR – 1/5 – Channel A / No Run IDs
Negative

830812-1
Summer 1983 Flights OR – 1/5 – Channel A / No Run IDs
Negative

830824
Summer 1983 Flights OR – 1/5 – Channel A / No Run IDs
Negative

830826
Summer 1983 Flights OR – 1/5 – Channel A / No Run IDs
Negative

830829
Summer 1983 Flights OR – 1/5 – Channel A / No Run IDs
Negative

830830
Summer 1983 Flights OR – 1/5 – Channel A / No Run IDs
Negative

830901
Summer 1983 Flights OR – 1/5 – Channel A / No Run IDs
Negative

830906
Summer 1983 Flights OR – 1/5 – Channel A / No Run IDs
Negative

830907
Summer 1983 Flights OR – 1/5 – Channel A / No Run IDs
Negative

830908
Summer 1983 Flights OR – 1/5 – Channel A / No Run IDs
Negative

830914
Summer 1983 Flights OR – 1/5 – Channel A / No Run IDs
Negative

830916
Summer 1983 Flights OR – 1/5 – Channel A / No Run IDs
Negative

Roll 27

830811-1
Summer 1983 Flights OR – 1/5 – Channel B / No Run IDs
Negative

830812-1
Summer 1983 Flights OR – 1/5 – Channel B / No Run IDs
Negative

830824
Summer 1983 Flights OR – 1/5 – Channel B / No Run IDs
Negative

830826
Summer 1983 Flights OR – 1/5 – Channel B / No Run IDs
Negative

830829
Summer 1983 Flights OR – 1/5 – Channel B / No Run IDs
Negative

830830
Summer 1983 Flights OR – 1/5 – Channel B / No Run IDs
Negative

830901
Summer 1983 Flights OR – 1/5 – Channel B / No Run IDs
Negative

830906
Summer 1983 Flights OR – 1/5 – Channel B / No Run IDs
Negative

830907
Summer 1983 Flights OR – 1/5 – Channel B / No Run IDs
Negative

830908
Summer 1983 Flights OR – 1/5 – Channel B / No Run IDs
Negative

830914
Summer 1983 Flights OR – 1/5 – Channel B / No Run IDs
Negative

830916
Summer 1983 Flights OR – 1/5 – Channel B / No Run IDs
Negative

BOX D-3 (13 OF 19) **AIDJEX / Winter Experiment / Geology 1978 / Guatemala (Geology 1978) / Alaska 1978**

Roll 28 (1 of 3)

830811-1
Summer 1983 Flights OR – 2/2 – Channel A / No Run IDs
Negative

830812-1
Summer 1983 Flights OR – 2/2 – Channel A / No Run IDs
Negative

830824
Summer 1983 Flights OR – 2/2 – Channel A / No Run IDs
Negative

830826
Summer 1983 Flights OR – 2/2 – Channel A / No Run IDs
Negative

830829
Summer 1983 Flights OR – 2/2 – Channel A / No Run IDs
Negative

830830
Summer 1983 Flights OR – 2/2 – Channel A / No Run IDs
Negative

830901
Summer 1983 Flights OR – 2/2 – Channel A / No Run IDs
Negative

830906
Summer 1983 Flights OR – 2/2 – Channel A / No Run IDs
Negative

830907
Summer 1983 Flights OR – 2/2 – Channel A / No Run IDs
Negative

830908
Summer 1983 Flights OR – 2/2 – Channel A / No Run IDs
Negative

830914
Summer 1983 Flights OR – 2/2 – Channel A / No Run IDs
Negative

830916
Summer 1983 Flights OR – 2/2 – Channel A / No Run IDs
Negative

Roll 28
(2 of 3)

830811-1
Summer 1983 Flights OR – 2/2 – Channel A / No Run IDs
Positive

830812-1
Summer 1983 Flights OR – 2/2 – Channel A / No Run IDs
Positive

830824
Summer 1983 Flights OR – 2/2 – Channel A / No Run IDs
Positive

830826
Summer 1983 Flights OR – 2/2 – Channel A / No Run IDs
Positive

830829
Summer 1983 Flights OR – 2/2 – Channel A / No Run IDs
Positive

830830
Summer 1983 Flights OR – 2/2 – Channel A / No Run IDs
Positive

830901
Summer 1983 Flights OR – 2/2 – Channel A / No Run IDs
Positive

830906
Summer 1983 Flights OR – 2/2 – Channel A / No Run IDs
Positive

830907
Summer 1983 Flights OR – 2/2 – Channel A / No Run IDs
Positive

830908
Summer 1983 Flights OR – 2/2 – Channel A / No Run IDs
Positive

830914
Summer 1983 Flights OR – 2/2 – Channel A / No Run IDs
Positive

830916
Summer 1983 Flights OR – 2/2 – Channel A / No Run IDs
Positive

Roll 28
(3 of 3)

830811-1
Summer 1983 Flights OR – 2/2 – Channel A / No Run IDs
Positive

830812-1
Summer 1983 Flights OR – 2/2 – Channel A / No Run IDs
Positive

830824
Summer 1983 Flights OR – 2/2 – Channel A / No Run IDs
Positive

830826
Summer 1983 Flights OR – 2/2 – Channel A / No Run IDs
Positive

830829
Summer 1983 Flights OR – 2/2 – Channel A / No Run IDs
Positive

830830
Summer 1983 Flights OR – 2/2 – Channel A / No Run IDs
Positive

830901
Summer 1983 Flights OR – 2/2 – Channel A / No Run IDs
Positive

830906
Summer 1983 Flights OR – 2/2 – Channel A / No Run IDs
Positive

830907
Summer 1983 Flights OR – 2/2 – Channel A / No Run IDs
Positive

830908
Summer 1983 Flights OR – 2/2 – Channel A / No Run IDs
Positive

830914
Summer 1983 Flights OR – 2/2 – Channel A / No Run IDs
Positive

830916
Summer 1983 Flights OR – 2/2 – Channel A / No Run IDs
Positive

Roll 29 830811-1
Summer 1983 Flights OR – 2/2 – Channel B / No Run IDs
Negative

830812-1
Summer 1983 Flights OR – 2/2 – Channel B / No Run IDs
Negative

830824
Summer 1983 Flights OR – 2/2 – Channel B / No Run IDs
Negative

830826
Summer 1983 Flights OR – 2/2 – Channel B / No Run IDs
Negative

830829
Summer 1983 Flights OR – 2/2 – Channel B / No Run IDs
Negative

830830
Summer 1983 Flights OR – 2/2 – Channel B / No Run IDs
Negative

830901
Summer 1983 Flights OR – 2/2 – Channel B / No Run IDs
Negative

830906
Summer 1983 Flights OR – 2/2 – Channel B / No Run IDs
Negative

830907
Summer 1983 Flights OR – 2/2 – Channel B / No Run IDs
Negative

830908
Summer 1983 Flights OR – 2/2 – Channel B / No Run IDs
Negative

830914
Summer 1983 Flights OR – 2/2 – Channel B / No Run IDs
Negative

830916
Summer 1983 Flights OR – 2/2 – Channel B / No Run IDs
Negative

BOX E-1 (14 OF 19) **Geology 1980 / Summer 1984 / Summer 1985**

Roll 1 (1 of 2)

800804
Geology 1890 – OR/ 102-1 – Channel A
16 Runs – L-band / H-V / With STC
Negative

800808
Geology 1890 – OR/ 102-1 – Channel A
7 Runs – L-band / V-V / With STC
Negative

800810
Geology 1890 – OR/ 102-1 – Channel A
3 Runs – L-band / V-V / With STC
Negative

800811
Geology 1890 – OR/ 102-1 – Channel A
7 Runs – L-band / V-V / With STC
Negative

800911
Geology 1890 – OR/ 102-1 – Channel A
5 Runs – L-band / H-H / With STC – Runs 1-4 / V-H / With STC – Run 5
Negative

800918
Geology 1890 – OR/ 102-1 – Channel A
17 Runs – L-band / V-H / With STC
Negative

Roll 1 (2 of 2)

800804
Geology 1890 – OR/ 102-1 – Channel A
16 Runs – L-band / H-V / With STC
Positive

800808
Geology 1890 – OR/ 102-1 – Channel A
7 Runs – L-band / V-V / With STC
Positive

800810
Geology 1890 – OR/ 102-1 – Channel A
3 Runs – L-band / V-V / With STC
Positive

800811
Geology 1890 – OR/ 102-1 – Channel A
7 Runs – L-band / V-V / With STC
Positive

800911
Geology 1890 – OR/ 102-1 – Channel A
5 Runs – L-band / H-H / With STC – Runs 1-4 / V-H / With STC – Run 5
Positive

800918
Geology 1890 – OR/ 102-1 – Channel A
17 Runs – L-band / V-H / With STC
Positive

Roll 2

800804
Geology 1980 – Channel B
Mount St. Helens
Geology – 16 Runs – L-band / V-H / With STC
Positive

Roll 3

[Missing]

Roll 4
(1 of 2)

800804
Mount St. Helens
Geology 1980 – OR 102-1 – Channel B
Mount St. Helens Geology – 16 Runs – L-band / V-H / With STC
Positive

800808
Guatemala – Belize – Yucatan
Geology 1980 – OR 102-1 – Channel B
7 Runs – L-band / H-H / With STC
Positive

800810
Geology 1980 – OR 102-1 – Channel B
3 Runs – L-band / H-H / With STC
Positive

800811
Geology 1980 – OR 102-1 – Channel B
7 Runs – L-band / H-H / With STC
Positive

800911
Geology 1980 – OR 102-1 – Channel B
5 Runs – L-band / H-H / With STC
Positive

800918
Geology 1980 – OR 102-1 – Channel B
17 Runs – L-band / H-H / With STC
Positive

Roll 4 (2 of 2)	800804 Mount St. Helens Geology 1980 – OR 102-1 – Channel B Mount St. Helens Geology – 16 Runs – L-band / V-H / With STC Positive
	800808 Guatemala – Belize – Yucatan Geology 1980 – OR 102-1 – Channel B 7 Runs – L-band / H-H / With STC Positive
	800810 Geology 1980 – OR 102-1 – Channel B 3 Runs – L-band / H-H / With STC Positive
	800811 Geology 1980 – OR 102-1 – Channel B 7 Runs – L-band / H-H / With STC Positive
	800911 Geology 1980 – OR 102-1 – Channel B 5 Runs – L-band / H-H / With STC Positive
	800918 Geology 1980 – OR 102-1 – Channel B 17 Runs – L-band / H-H / With STC Positive
Roll 5	800808 Geology 1980 OR 2 (Out of Focus) – Channel B 7 Runs – No documentation Negative
Roll 6 (1 of 2)	800911 Geology 1980 – OR 102-2 – Channel A 5 Runs – L-band / H-H / With STC – Runs 1-4 / H-V / With STC – Run 5 Negative
	800918 Geology 1980 – OR 102-2 – Channel A 17 Runs – L-band / H-V / With STC Negative
Roll 6 (2 of 2)	800911 Geology 1980 – OR 102-2 – Channel A 5 Runs – L-band / H-H / With STC – Runs 1-4 / H-V / With STC – Run 5 Positive

800918
Geology 1980 – OR 102-2 – Channel A
17 Runs – L-band / H-V / With STC
Positive

Roll 7
(1 of 2)

800911
Geology 1980 – OR 102-2 – Channel B
5 Runs – L-band / H-H / With STC – Runs 1-4 / V-V / With STC – Run 5
Negative

800918
Geology 1980 – OR 102-2 – Channel B
17 Runs – L-band / H-V / With STC
Negative

Roll 7
(2 of 2)

800911
Geology 1980 – OR 102-2 – Channel B
5 Runs – L-band / H-H / With STC – Runs 1-4 / V-V / With STC – Run 5
Positive

800918
Geology 1980 – OR 102-2 – Channel B
17 Runs – L-band / H-V / With STC
Positive

Roll 8

[Missing]

Roll 9
(1 of 2)

840816
84 Summer Test Flights – OR 2 – Channel A – Position 2
Moffett-to-Moffett / Sensor Checkout – 5 Runs / H-H
Positive

840910-840911
84 Summer Test Flights – OR 2 – Channel A – Position 2
Moffett-Houston / Meteor Crater – Tucson – 15 Runs / H-H
Positive

840914
84 Summer Test Flights – OR 2 – Channel A – Position 2
Houston-McGuire / Jacks Forest – 7 Runs / H-H
Positive

840916
84 Summer Test Flights – OR 2 – Channel A – Position 2
McGuire-McGuire / Winchester – 8 Runs / H-H
Positive

840916-840917
84 Summer Test Flights – OR 2 – Channel A – Position 2
McGuire-McGuire / Blackwater – 12 Runs / H-H
Positive

840920-840921
84 Summer Test Flights – OR 2 – Channel A – Position 2
McGuire-Duluth / Sir-B / New England – 13 Runs / H-H
Positive

840926
84 Summer Test Flights – OR 2 – Channel A – Position 2
Northern California – 15 Runs / H-H
Positive

840928
84 Summer Test Flights – OR 2 – Channel A – Position 2
California-Nevada / Sir-B – 15 Runs / H-H
Positive

Roll 9
(2 of 2)

840816
84 Summer Test Flights – OR 2 – Channel A – Position 2
Moffett-to-Moffett / Sensor Checkout – 5 Runs / H-H
Positive

840910-840911
84 Summer Test Flights – OR 2 – Channel A – Position 2
Moffett-Houston / Meteor Crater – Tucson – 15 Runs / H-H
Positive

840914
84 Summer Test Flights – OR 2 – Channel A – Position 2
Houston-McGuire / Jacks Forest – 7 Runs / H-H
Positive

840916
84 Summer Test Flights – OR 2 – Channel A – Position 2
McGuire-McGuire / Winchester – 8 Runs / H-H
Positive

840916-840917
84 Summer Test Flights – OR 2 – Channel A – Position 2
McGuire-McGuire / Blackwater – 12 Runs / H-H
Positive

840920-840921
84 Summer Test Flights – OR 2 – Channel A – Position 2
McGuire-Duluth / Sir-B / New England –13 Runs / H-H
Positive

840926
84 Summer Test Flights – OR 2 – Channel A – Position 2
Northern California – 15 Runs / H-H
Positive

840928
84 Summer Test Flights – OR 2 – Channel A – Position 2
California-Nevada / Sir-B – 15 Runs / H-H
Positive

BOX E-2 (15 OF 19) **Geology 1980 / Summer 1984 / Summer 1985**

Roll 10 [Missing]

Roll 11 841017
84 Summer / Fall – OR 2 – Channel A
Moffett-Moffett / NOSC Tower / Raisin City, California / H-H
Positive

841031
84 Summer / Fall – OR 2 – Channel A
Moffett-Moffett / NOSC Tower, California / H-H
Positive

841104-841106
Moffett-Moffett / NOSC Tower and Los Angeles, California / Southern California / H-H
Positive

841107
84 Summer / Fall – OR 2 – Channel A
Moffett-Moffett / NOSC Tower / Monterey Bay, California / H-H
Positive

Roll 12 840920-840921
84 Summer / Fall – OR 2 – Channel A
McQuire-to-Deluth / SIR-B / Connecticut, Upstate New York / Ely Pines, Minnesota / H-H
Positive

840926
84 Summer / Fall – OR 2 – Channel A
Moffett-Moffett / Northern California / SIR-B / H-H
Positive

840928
84 Summer / Fall – OR 2 – Channel A
Moffett-Moffett / California / Nevada / SIR-B / H-H
Positive

841018-841019
84 Summer / Fall – OR 2 – Channel A
Moffett-Moffett / Wind and Snake Rivers, Wyoming and ID / Raisin City, California / H-H
Positive

Roll 13 850308
85 Spring Flight – Engineering Checkout #1 – OR 5 – Channel A
Moffett-to-Moffett / V-V
Negative [?]

Roll 14 850308
85 Spring Flight – Engineering Checkout #1 – OR 5 – Channel B
Moffett-to-Moffett / V-V
Negative [?]

Roll 15 850314
85 Spring Flight
OR 2 – Channel A / H-H
Negative

850314
85 Spring Flight
OR 5 – Channel A / V-V
Negative

850314
85 Spring Flight
OR 2 – Channel B / H-V
Negative

850314
85 Spring Flight
OR 5 – Channel B / V-H
Negative

Roll 16 850319
85 Spring Flight
OR 2 & 5 / Channels A & B / Positions 1 & 2 / Moffett-Moffett / First NOSC Tower Flight, California
Negative

Roll 17 850327
85 Spring Flight
OR 2 – Channel A / No documentation
Negative

Roll 18 850424
85 Spring Flight
OR 1 – Channel B / No documentation
Negative

850424
85 Spring Flight
OR 2 – Channel B / No documentation
Negative

Roll 19 850521
85 Spring Flight
OR 2 – Channel B / No Documentation
Negative

BOX E-3 (16 OF 19) **Geology 1980 / Summer 1984 / Summer 1985**

Roll 20 850607
85 Spring Flight
OR 2 – Channel B / No Documentation
Negative

850607
85 Spring Flight
OR 5 – Channel B / No Documentation
Negative

Roll 21 850610
85 Spring Flight
OR 5 – Channel A / No Documentation
Negative

Roll 22 850612-850614
85 Summer Flight – OR 2 – Channel B
Moffett-Omaha / Transit, Konza, Kansas / Omaha, New Jersey – Konza, Kansas / Ann Arbor, Michigan
Negative

850616
85 Summer Flight – OR 2 – Channel B
New Jersey-New Jersey / Wetlands and Forests, Maryland / New York / Vermont
Negative

850617-850618
85 Summer Flight – OR 2 – Channel B
New Jersey-Omaha / Transit, Traverse City, Michigan and Konza, Kansas / Omaha-Moffett Transit
Konza, Kansas
Negative

850621
85 Summer Flight – OR 2 – Channel B
Moffett-Moffett / Wind, Wyoming and Snake, Idaho / Rivers Geology
Negative

850627
85 Summer Flight – OR 2 – Channel B
Moffett-Moffett / CA / Nevada Geology
Negative

850713
85 Summer Flight – OR 2 – Channel B
New Jersey-New Jersey / Wetlands and Forests, Maryland and New England
Negative

Roll 23

850612-850614
85 Summer Flight – OR 5 – Channel B
Moffett-Omaha / Transit, Konza, Kansas / Omaha-New Jersey – Konza, Kansas / Ann Arbor, Michigan
Negative

850616
85 Summer Flight – OR 5 – Channel B
New Jersey-New Jersey / Wetlands and Forests, Maryland / New York / Vermont
Negative

850617-850618
85 Summer Flight – OR 5 – Channel B
New Jersey-Omaha / Transit, Traverse City, Michigan and Konza, Kansas / Omaha-Moffett Transit / Konza, Kansas
Negative

850621
85 Summer Flight – OR 5 – Channel B
Moffett-Moffett / Wind, Wyoming and Snake, Idaho / Rivers Geology
Negative

850627
85 Summer Flight – OR 5 – Channel B
Moffett-Moffett / CA / Nevada Geology
Negative

850713
85 Summer Flight – OR 5 – Channel B
New Jersey-New Jersey / Wetlands and Forests, Maryland and New England
Negative

Roll 24

850612
85 Summer Flight OR 2 & 5 – Channel B
Moffett Omaha – Transit, Konza, Kansas / C-band Only – Run 5, 6
Negative

850614
85 Summer Flight OR 2 & 5 – Channel B
Omaha-New Jersey – Transit, Konza, Kansas / Ann Arbor, Michigan/ C-band 20, 21
Negative

850616
85 Summer Flight OR 2 & 5 – Channel B
New Jersey-New Jersey / Wetlands and Forest, Maryland / New York / Vermont / C-band 20, 21, 23
Negative

850617-850618
85 Summer Flight OR 2 & 5 – Channel B
New Jersey-Omaha – Transit, Traverse City, Michigan and Konza, Kansas / Omaha-Moffett – Transit, Konza, Kansas / C-band 1, 17, 18, 19
Negative

850621
85 Summer Flight OR 2 & 5 – Channel B
Moffett-Moffett / Wind, Wyoming - Snake, Idaho / River Geology / C-band 1, 11, 12, 13, 15
Negative

850627
85 Summer Flight OR 2 & 5 – Channel B
Moffett-Moffett / CA / Nevada Geology / C-band 8
Negative

Roll 25
(1 of 4)

850616
85 Summer Flight – OR 5 – Channel A
New Jersey-New Jersey / Wetlands and Forests, Maryland / New York / Vermont
Positive

850621
85 Summer Flight – OR 5 – Channel A
Moffett-Moffett / Wind, Wyoming / Snake, Idaho / Rivers Geology
Positive

850627
85 Summer Flight – OR 5 – Channel A
Moffett-Moffett / California / Nevada Geology
Positive

Roll 25
(2 of 4)

850616
85 Summer Flight – OR 5 – Channel A
New Jersey-New Jersey / Wetlands and Forests, Maryland / New York / Vermont
Positive

850621
85 Summer Flight – OR 5 – Channel A
Moffett-Moffett / Wind, Wyoming / Snake, Idaho / Rivers Geology
Positive

850627
85 Summer Flight – OR 5 – Channel A
Moffett-Moffett / California / Nevada Geology
Positive

Roll 25
(3 of 4)

850616
85 Summer Flight – OR 5 – Channel A
New Jersey-New Jersey / Wetlands and Forests, Maryland / New York / Vermont
Positive

850621
85 Summer Flight – OR 5 – Channel A
Moffett-Moffett / Wind, Wyoming / Snake, Idaho / Rivers Geology
Positive

850627
85 Summer Flight – OR 5 – Channel A
Moffett-Moffett / California / Nevada Geology
Positive

Roll 25A
(4 of 4)

850616
85 Summer Flight – OR 5 – Channel A
New Jersey-New Jersey / Wetlands and Forests, Maryland / New York / Vermont
Negative

850621
85 Summer Flight – OR 5 – Channel A
Moffett-Moffett / Wind, Wyoming / Snake, Idaho / Rivers Geology
Negative

850627
85 Summer Flight – OR 5 – Channel A
Moffett-Moffett / California / Nevada Geology
Negative

Roll 26

850627 + 850710
85 Summer Flights – Channel A
OR 5 / Moffett-Moffett / California / Nevada Geology / Duluth-New Jersey – Transit Ely, Minnesota & Traverse, Michigan
Negative

850627 + 850710
85 Summer Flights – Channel A
OR 2 / Moffett-Moffett / California / Nevada Geology / Duluth-New Jersey – Transit Ely, Minnesota & Traverse, Michigan
Negative

850713
85 Summer Flights – Channel A
OR 5 / New Jersey-New Jersey / Wetlands and Forests, Maryland and New England
Negative

850713
85 Summer Flights – Channel A
OR 2 / New Jersey-New Jersey / Wetlands and Forests, Maryland and New England
Negative

BOX F-1 (17 OF 19) **Guatemala for Walter Brown – 1977, 1978, 1980**

Roll 1 (1 of 2)

771024
Hurricane II Special GG
Guatemala
Channel B – L-band H-H with STC – 5 Runs
Positive

771025
Hurricane II Special GG
Guatemala
Channel B – L-band H-H with STC – 8 Runs
Positive

771025
Hurricane II Special GG
Guatemala
Channel D – L-band H-H with STC – Extended swath – 8 Runs
Positive

771025
Hurricane II Special GG
Guatemala (including Tikal)
Channel D – L-band H-H with STC – 12 Runs
Positive

Roll 1 (2 of 2)

771024
Hurricane II Special GG
Guatemala
Channel B – L-band H-H with STC – 5 Runs
Positive

771025
Hurricane II Special GG
Guatemala
Channel B – L-band H-H with STC – 8 Runs
Positive

771025
Hurricane II Special GG
Guatemala
Channel D – L-band H-H with STC – Extended swath – 8 Runs
Positive

771025
Hurricane II Special GG
Guatemala (including Tikal)
Channel D – L-band H-H with STC – 12 Runs
Positive

Roll 2

770125
Guatemala – Special Roll – Channel B – OR-1
Guatemala
8 Runs – L-band H-H with STC
Negative

770125
Guatemala – Special Roll – Channel B – OR-1
Guatemala (including Tikal)
12 Runs – L-band H-H with STC
Negative

780414
Guatemala – Special Roll – Channel B – OR-1
Guatemala
Geology 78 / Archeology #1 / Tikal, Guatemala – 13 Runs – L-band H-H with STC
Negative

780417
Guatemala – Special Roll – Channel B – OR-1
Guatemala
Geology 78 / Archeology #2 / Tikal, Mirador, Guatemala – 7 Runs – L-band H-H with STC
Negative

780414
Guatemala – Special Roll – Channel B – OR-1
Guatemala
Geology 78 / Archeology #2 / Tikal, Guatemala – 5 Runs – L-band H-H with STC
Negative

780418
Guatemala – Special Roll – Channel B – OR-1
Guatemala
Geology 78 / Archeology #3 / Guatemala / Lake Isabela – 7 Runs – L-band H-H with STC
Negative

780418
Guatemala – Special Roll – Channel B – OR-1
Guatemala
Geology 78 / Archeology #3 / Guatemala / Lake Isabela – 5 Runs – L-band H-H with STC
Negative

780419
Guatemala – Special Roll – Channel B – OR-1
Guatemala
Geology 78 / Archeology #4 / Guatemala / Volcano Fuego – 3 Runs – L-band H-H with STC
Negative

780419
Guatemala – Special Roll – Channel B – OR-1
Guatemala
Geology 78 / Archeology #4 / Guatemala / Volcano Fuego – 8 Runs – L-band H-H with STC
Negative

780420
Guatemala – Special Roll – Channel B – OR-1
Guatemala
Geology 78 / Archeology #5 / Guatemala / Flores Airstrip, Tikal, Mirador – 8 Runs – L-band H-H with STC
Negative

Roll 3

770125
Guatemala – Special Roll 2 (1981 Correlations) – Channel D – OR-2
Guatemala
8 Runs – L-band H-H with STC
Negative

770125
Guatemala – Special Roll 2 (1981 Correlations) – Channel D – OR-2
Guatemala (including Tikal)
12 Runs – L-band H-H with STC
Negative

780414
Guatemala – Special Roll 2 (1981 Correlations) – Channel D – OR-2
Guatemala
Geology 78 / Archeology #1 / Tikal, Guatemala – 13 Runs – L-band H-H with STC
Negative

780417
Guatemala – Special Roll 2 (1981 Correlations) – Channel D – OR-2
Guatemala
Geology 78 / Archeology #2 / Tikal, Mirador, Guatemala – 7 Runs – L-band H-H with STC
Negative

780414
Guatemala – Special Roll 2 (1981 Correlations) – Channel D – OR-2
Guatemala
Geology 78 / Archeology #2 / Tikal, Guatemala – 5 Runs – L-band H-H with STC
Negative

780418
Guatemala – Special Roll 2 (1981 Correlations) – Channel D – OR-2
Guatemala
Geology 78 / Archeology #3 / Guatemala / Lake Isabela – 7 Runs – L-band H-H with STC
Negative

780418
Guatemala – Special Roll 2 (1981 Correlations) – Channel D – OR-2
Guatemala
Geology 78 / Archeology #3 / Guatemala / Lake Isabela – 5 Runs – L-band H-H with STC
Negative

780419
Guatemala – Special Roll 2 (1981 Correlations) – Channel D – OR-2
Guatemala
Geology 78 / Archeology #4 / Guatemala / Volcano Fuego – 3 Runs – L-band H-H with STC
Negative

780419
Guatemala – Special Roll 2 (1981 Correlations) – Channel D – OR-2
Guatemala
Geology 78 / Archeology #4 / Guatemala / Volcano Fuego – 8 Runs – L-band H-H with STC
Negative

780420
Guatemala – Special Roll 2 (1981 Correlations) – Channel D – OR-2
Guatemala
Geology 78 / Archeology #5 / Guatemala / Flores Airstrip, Tikal, Mirador – 8 Runs – L-band H-H with STC
Negative

Roll 4

780414
RRST Temporary Roll – Channel B (not in consecutive day order)
Guatemala
Geology 78 / Archeology #1 / Tikal, Guatemala – 13 Runs – L-band H-H with STC
Negative

780417
RRST Temporary Roll – Channel B (not in consecutive day order)
Guatemala
Geology 78 / Archeology #2 / Tikal, Mirador, Guatemala – 7 Runs – L-band H-H with STC
Negative

780419
RRST Temporary Roll – Channel B (not in consecutive day order)
Guatemala
Geology 78 / Archeology #4 / Guatemala / Volcano Fuego – 8 Runs – L-band H-H with STC
Negative

780418
RRST Temporary Roll – Channel B (not in consecutive day order)
Guatemala
Geology 78 / Archeology #3 / Guatemala / Lake Isabela – 5 Runs – L-band H-H with STC
Negative

780419
RRST Temporary Roll – Channel B (not in consecutive day order)
Guatemala
Geology 78 / Archeology #4 / Guatemala / Volcano Fuego – 3 Runs – L-band H-H with STC
Negative

780418
RRST Temporary Roll – Channel B (not in consecutive day order)
Guatemala
Geology 78 / Archeology #3 / Guatemala / Lake Isabela – 7 Runs – L-band H-H with STC
Negative

780417
RRST Temporary Roll – Channel B (not in consecutive day order)
Guatemala
Geology 78 / Archeology #2 / Tikal, Guatemala – 5 Runs – L-band H-H with STC
Negative

780414
RRST Temporary Roll – Channel B (not in consecutive day order)
Guatemala
Geology 78 / Archeology #2 / Tikal, Mirador, Guatemala – 7 Runs – L-band H-H with STC
Negative

Roll 5
(1 of 3)

780414
Guatemala – Channel B / DN / Recorrelated 0612/79
Guatemala
Geology 78 / Archeology #1 / Tikal, Guatemala – 13 Runs – L-band H-H with STC
Negative

780417
Guatemala – Channel B / DN / Recorrelated 0612/79
Guatemala
Geology 78 / Archeology #2 / Tikal, Mirador, Guatemala – 7 Runs – L-band H-H with STC
Negative

780414
Guatemala – Channel B / DN / Recorrelated 0612/79
Guatemala
Geology 78 / Archeology #2 / Tikal, Guatemala – 5 Runs – L-band H-H with STC
Negative

780418
Guatemala – Channel B / DN / Recorrelated 0612/79
Guatemala
Geology 78 / Archeology #3 / Guatemala / Lake Isabela – 7 Runs – L-band H-H with STC
Negative

780418
Guatemala – Channel B / DN / Recorrelated 0612/79
Guatemala
Geology 78 / Archeology #3 / Guatemala / Lake Isabela – 5 Runs – L-band H-H with STC
Negative

780419
Guatemala – Channel B / DN / Recorrelated 0612/79
Guatemala
Geology 78 / Archeology #4 / Guatemala / Volcano Fuego – 3 Runs – L-band H-H with STC
Negative

780419
Guatemala – Channel B / DN / Recorrelated 0612/79
Guatemala
Geology 78 / Archeology #4 / Guatemala / Volcano Fuego – 8 Runs – L-band H-H with STC
Negative

780420
Guatemala – Channel B / DN / Recorrelated 0612/79
Guatemala
Geology 78 / Archeology #5 / Guatemala / Flores Airstrip, Tikal, Mirador – 8 Runs – L-band H-H with STC
Negative

Roll 5
(2 of 3)

780414
Guatemala – Channel B / DN / Recorrelated 0612/79
Guatemala
Geology 78 / Archeology #1 / Tikal, Guatemala – 13 Runs – L-band H-H with STC
Positive

780417
Guatemala – Channel B / DN / Recorrelated 0612/79
Guatemala
Geology 78 / Archeology #2 / Tikal, Mirador, Guatemala – 7 Runs – L-band H-H with STC
Positive

780414
Guatemala – Channel B / DN / Recorrelated 0612/79
Guatemala
Geology 78 / Archeology #2 / Tikal, Guatemala – 5 Runs – L-band H-H with STC
Positive

780418
Guatemala – Channel B / DN / Recorrelated 0612/79
Guatemala
Geology 78 / Archeology #3 / Guatemala / Lake Isabela – 7 Runs – L-band H-H with STC
Positive

780418
Guatemala – Channel B / DN / Recorrelated 0612/79
Guatemala
Geology 78 / Archeology #3 / Guatemala / Lake Isabela – 5 Runs – L-band H-H with STC
Positive

780419
Guatemala – Channel B / DN / Recorrelated 0612/79
Guatemala
Geology 78 / Archeology #4 / Guatemala / Volcano Fuego – 3 Runs – L-band H-H with STC
Positive

780419
Guatemala – Channel B / DN / Recorrelated 0612/79
Guatemala
Geology 78 / Archeology #4 / Guatemala / Volcano Fuego – 8 Runs – L-band H-H with STC
Positive

780420
Guatemala – Channel B / DN / Recorrelated 0612/79
Guatemala
Geology 78 / Archeology #5 / Guatemala / Flores Airstrip, Tikal, Mirador – 8 Runs – L-band H-H with STC
Positive

Roll 5
(3 of 3)

780414
Guatemala – Channel B / DN / Recorrelated 0612/79
Guatemala
Geology 78 / Archeology #1 / Tikal, Guatemala – 13 Runs – L-band H-H with STC
Positive

780417
Guatemala – Channel B / DN / Recorrelated 0612/79
Guatemala
Geology 78 / Archeology #2 / Tikal, Mirador, Guatemala – 7 Runs – L-band H-H with STC
Positive

780414
Guatemala – Channel B / DN / Recorrelated 0612/79
Guatemala
Geology 78 / Archeology #2 / Tikal, Guatemala – 5 Runs – L-band H-H with STC
Positive

780418
Guatemala – Channel B / DN / Recorrelated 0612/79
Guatemala
Geology 78 / Archeology #3 / Guatemala / Lake Isabela – 7 Runs – L-band H-H with STC
Positive

780418
Guatemala – Channel B / DN / Recorrelated 0612/79
Guatemala
Geology 78 / Archeology #3 / Guatemala / Lake Isabela – 5 Runs – L-band H-H with STC
Positive

780419
Guatemala – Channel B / DN / Recorrelated 0612/79
Guatemala
Geology 78 / Archeology #4 / Guatemala / Volcano Fuego – 3 Runs – L-band H-H with STC
Positive

780419
Guatemala – Channel B / DN / Recorrelated 0612/79
Guatemala
Geology 78 / Archeology #4 / Guatemala / Volcano Fuego – 8 Runs – L-band H-H with STC
Positive

780420
Guatemala – Channel B / DN / Recorrelated 0612/79
Guatemala
Geology 78 / Archeology #5 / Guatemala / Flores Airstrip, Tikal, Mirador – 8 Runs – L-band H-H with STC
Positive

Roll 6

780414
Guatemala – Channel D / DN / Recorrelated 0612/79
Guatemala
Geology 78 / Archeology #1 / Tikal, Guatemala – 13 Runs – L-band H-H with STC
Negative

780417
Guatemala – Channel D / DN / Recorrelated 0612/79
Guatemala
Geology 78 / Archeology #2 / Tikal, Mirador, Guatemala – 7 Runs – L-band H-H with STC
Negative

780414
Guatemala – Channel D / DN / Recorrelated 0612/79
Guatemala
Geology 78 / Archeology #2 / Tikal, Guatemala – 5 Runs – L-band H-H with STC
Negative

780418
Guatemala – Channel D / DN / Recorrelated 0612/79
Guatemala
Geology 78 / Archeology #3 / Guatemala / Lake Isabela – 7 Runs – L-band H-H with STC
Negative

780418
Guatemala – Channel D / DN / Recorrelated 0612/79
Guatemala
Geology 78 / Archeology #3 / Guatemala / Lake Isabela – 5 Runs – L-band H-H with STC
Negative

780419
Guatemala – Channel D / DN / Recorrelated 0612/79
Guatemala
Geology 78 / Archeology #4 / Guatemala / Volcano Fuego – 3 Runs – L-band H-H with STC
Negative

780419
Guatemala – Channel D / DN / Recorrelated 0612/79
Guatemala
Geology 78 / Archeology #4 / Guatemala / Volcano Fuego – 8 Runs – L-band H-H with STC
Negative

780420
Guatemala – Channel D / DN / Recorrelated 0612/79
Guatemala
Geology 78 / Archeology #5 / Guatemala / Flores Airstrip, Tikal, Mirador – 8 Runs – L-band H-H with STC
Negative

BOX F-2 (18 OF 19) Guatemala for Walter Brown – 1977, 1978, 1980

Roll 7

780417
Guatemala – Channel C
Guatemala
Geology 78 / Archeology #2 / Tikal, Guatemala – 7 Runs – L-band H-H with STC
Negative

780417
Guatemala – Channel C
Guatemala
Geology 78 / Archeology #2 / Tikal, Guatemala – 5 Runs – L-band H-H with STC
Negative

780418
Guatemala – Channel C
Guatemala
Geology 78 / Archeology #3 / Guatemala / Lake Isabela – 7 Runs – L-band H-V with STC
Negative

780418
Guatemala – Channel C
Guatemala
Geology 78 / Archeology #3 / Guatemala / Lake Isabela – 5 Runs – L-band H-V with STC
Negative

780419
Guatemala – Channel C
Guatemala
Geology 78 / Archeology #4 / Guatemala / Volcano Fuego – 3 Runs – L-band H-V with STC
Negative

780419
Guatemala – Channel C
Guatemala
Geology 78 / Archeology #4 / Guatemala / Volcano Fuego – 8 Runs – L-band H-V with STC
Negative

780420
Guatemala – Channel C
Guatemala
Geology 78 / Archeology #5 / Guatemala / Flores Airstrip, Tikal, Mirador – 8 Runs – L-band H-V with STC
Negative

Roll 8

780419
Guatemala – Channel A – Recorrelated 06/13/79
Guatemala
Geology 78 / Archeology #4 / Guatemala / Volcano Fuego – 3 Runs – L-band H-V with STC
Negative

780419
Guatemala – Channel A – Recorrelated 06/13/79
Guatemala
Geology 78 / Archeology #4 / Guatemala / Volcano Fuego – 8 Runs – L-band H-V with STC
Negative

780419
Guatemala – Channel A – Recorrelated 06/13/79
Guatemala
Geology 78 / Archeology #5 / Guatemala / Flores Airstrip, Tikal, Mirador – 8 Runs – L-band H-V with STC
Negative

Roll 9 (1 of 2)	780418 Guatemala – Channel D Guatemala Geology 78 / Archeology #3 / Guatemala / Lake Isabela – 5 Runs – L-band H-V with STC Negative
	780419 Guatemala – Channel D Guatemala Geology 78 / Archeology #4 / Guatemala / Volcano Fuego – 8 Runs – L-band H-V with STC Negative
	780419 Guatemala – Channel D Guatemala Geology 78 / Archeology #4 / Guatemala / Volcano Fuego – 8 Runs – L-band H-V with STC Negative
Roll 9 (2 of 2)	780418 Guatemala – Channel D Guatemala Geology 78 / Archeology #3 / Guatemala / Lake Isabela – 5 Runs – L-band H-H with STC Positive
	780419 Guatemala – Channel D Guatemala Geology 78 / Archeology #4 / Guatemala / Volcano Fuego – 8 Runs – L-band H-V with STC Positive
	780419 Guatemala – Channel D Guatemala Geology 78 / Archeology #4 / Guatemala / Volcano Fuego – 8 Runs – L-band H-V with STC Positive
Roll 10 (1 of 2)	780414 Channel B Annotated – JPL Archeology #1 Guatemala Geology 78 / Archeology #1 / Tikal, Guatemala – 13 Runs – L-band H-H with STC Negative
Roll 10 (2 of 2)	780414 Channel B Annotated – JPL Archeology #1 Guatemala Geology 78 / Archeology #1 / Tikal, Guatemala – 13 Runs – L-band H-H with STC Positive
Roll 11	780418 Channel B – JPL Archeology #3 Guatemala Geology 78 / Archeology #3 / Guatemala / Lake Isabela – 5 Runs – L-band H-H with STC Positive

Roll 12

780419
Guatemala Miscellaneous
Guatemala
Geology 78 / Archeology #4 / Guatemala / Volcano Fuego / Channel B – 8 Runs – L-band H-H with STC
Positive Print

Roll 13

780420
Partial – N. Yucatan Coast to Guatemala – End Rio San Padro Mortir, Guatemala
Geology 78 / Archeology #5 / Guatemala / Flores Airstrip, Tikal, Mirador – 8 Runs – L-band H-H with STC
Positive Print

Roll 14

800801
Guatemala – Special Roll 3 (1981 Correlations) – Geology 1980
Channel A / OR-1 / Geology 1980 / Guatemala Archeology – 7 Runs – L-band H-V with STC
Negative

800801
Guatemala – Special Roll 3 (1981 Correlations) – Geology 1980
Guatemala
Channel B / OR-1 / Geology 1980 / Guatemala Archeology – 7 Runs– L-band H-V with STC
Negative

800801
Guatemala – Special Roll 3 (1981 Correlations) – Geology 1980
Guatemala
Channel A / OR-2 (Out of Focus) / Geology 1980 / Guatemala Archeology – L-band V-V with STC
Negative

800801
Guatemala – Special Roll 3 (1981 Correlations) – Geology 1980
Guatemala
Channel B / OR-2 (Out of Focus) / Geology 1980 / Guatemala Archeology – L-band H-V with STC
Negative

800801
Guatemala – Special Roll 3 (1981 Correlations) – Geology 1980
Guatemala
Channel A / OR-2 (Out of Focus) – L-band V-V with STC
Negative

800801
Guatemala – Special Roll 3 (1981 Correlations) – Geology 1980
Guatemala
Channel B / OR-2 (Out of Focus) – L-band H-V with STC
Negative

BOX G-1 **Extra Data (780520) / Winter 1979 / JSC X-band 1979-1981**
(19 of 19)

Roll 1
780520
Extra Data Channel D
JPL Geology – Pasadena / Santa Barbara -- 13 Runs
No Run IDs – L-band H-V with STC
Negative

Roll 2
790306-790307
Winter 79 Channel A
JPL / Santa Barbara / Helendale – 7 Runs / Los Angeles – 14 Runs
No Run IDs – L-band H-V with STC
Negative

Roll 3
790306-790307
Winter 79 Channel B
JPL / Santa Barbara / Helendale – 7 Runs / Los Angeles – 14 Runs
No Run IDs – L-band H-H with STC
Negative

Roll 4
790306-790306
Winter 79 Channel C
JPL / Santa Barbara / Helendale – 7 Runs
No Run IDs – L-band H-H with STC
Negative

Roll 5
790306-790306
Winter 79 Channel D
JPL / Santa Barbara / Helendale – 7 Runs
No Run IDs – L-band H-H with STC
Negative

Roll 6
790426-790426
JSC X-band
Site No. 265 – Mississippi Delta
Project 0A-0627 / Data Flight No. 2 / Roll No. 601 / Mission 400 / No Run IDs
Negative

Roll 7
790426-790426
JSC X-band
Site No. 265 – Mississippi Delta
Flight No. 3 / Project 0A-0627 / Data Flight No. 3 / Roll No. 602 / Mission 400 / No Run IDs
Negative

Roll 8
790427
JSC X-band Positive
Site No. 212 – Cayanosa, Texas
Flight No. 4 / Project 0A-0653R1 / Data Flight No. 18 / Mission 400 / No Run IDs
Negative

Roll 9
790502
JSC X-band
Site No. 030 – Tucson, Arizona
Flight No. 7 / Project 0A-0627 / Data Flight No. 1 / Roll No. 604 / Mission 400 / No Run IDs
Negative

Roll 10

790525
JSC X-band
Site No. 129 – Arkansas Basin
Flight No. 8 / Project 0A-0627 / Data Flight No. 4 / Roll No. 601 / Mission 402 / Aircraft 926
No Run IDs
Negative

Roll 11

790529
JSC X-band
Site No. 129 – Arkansas
Project 0A-0627 / Data Flight No. 4 & 5 / Roll No. 602 / Mission 402 / Aircraft 926
X-band H-H and H-V / Some Run IDs
Negative

Roll 12

790623
JSC X-band
Site No. 129 – Arkansas Basin
Project 0A-0627 / Data Flight FCF No. 2 / Roll No. 602 / Mission 404 / Aircraft 926
8 Runs – X-band H-H and H-V / Some Run IDs

Roll 13

790627
JSC X-band
Site No. 399
Flight No. 11 / Mission 404 / Roll 604 / Aircraft 926 – H-H and H-V / No Run IDs
Positive

790901
JSC X-band
Site No. 285
Flight No. 7 / Data Flight No. 20 / Mission 408 / Project 0A-0653R1 / Roll 607 / Aircraft 926
Patrick Draw – H-H, V-H, H-V, and V-V / No Run IDs
Positive

790906
JSC X-band
Site No. 379 – San Rafael
Flight No. 14 / Data Flight No. 11 & 13 / Mission 408 / Project 0A-0627 / Roll 614 / Aircraft 926 – H-H and H-V / No Run IDs
Positive

790907
JSC X-band
Site No. 379 – San Rafael
Flight No. 16 / Data Flight No. 11, 12, & 13 / Mission 408 / Project 0A-0627 / Roll 616 / Aircraft 926 – H-H and H-V / No Run IDs
Positive

790907
JSC X-band
Site No. 379 – San Rafael
Flight No. 17 / Data Flight No. 12 & 13 / Mission 408 / Project 0A-0627 / Roll 616 / Aircraft 926 – H-H and H-V / No Run IDs
Positive

Roll 14	790628 JSC X-band Site No. 177 – TVA: Tennessee / Kentucky Project 0A-0627 / Data Fight No. 7 / Mission 404 / Roll No. 605 / Aircraft 926 8 Runs – X-band H-H and H-V / Some Run IDs Positive
Roll 15 (1 of 4)	800707 JSC X-band Site No. 067 – Mount Saint Helens Project M-0058 / Data Flight 1 / Mission 424 / Modes 1&2 V-V, H-V, V-H, H-H / Some Run IDs Negative
Roll 15 (2 of 4)	800707 JSC X-band Site No. 067 – Mount Saint Helens Project M-0058 / Data Flight 1 / Mission 424 / Modes 1&2 V-V, H-V, V-H, H-H / Some Run IDs Negative
Roll 15 (3 of 4)	800707 JSC X-band Site No. 067 – Mount Saint Helens Project M-0058 / Data Flight 1 / Mission 424 / Modes 1&2 V-V, H-V, V-H, H-H / Some Run IDs Positive
Roll 15 (4 of 4)	800707 JSC X-band Site No. 067 – Mount Saint Helens Project M-0058 / Data Flight 1 / Mission 424 / Modes 1&2 V-V, H-V, V-H, H-H / Some Run IDs Positive
Roll 16	800707 St. Helens X-band Site No. 067 – Mount Saint Helens Mission 424 / Modes 1 & 2 – V-V, H-V, V-H, H-H / Some Run IDs Positive
Roll 17	810724 JSC X-band Site No. 063 – Newberry, OR / Mt. St. Helens, Washington Flight No. 8 / Project 0787R1 / Data Flight No. 14 / Mission 446 / Roll No. 604 Negative
	810725 JSC X-band Site No. 062 & 063 – Medicine Lake + Cinder Cone, California / Newberry, OR Flight No. 9 / Project 0787R1 / Data Flight No. 13 & 14 / Mission 446 / Roll No. 605 Negative

810726
JSC X-band
Site No. 033 – Craters of the Moon, Idaho
Flight No. 10 / Project 0787R1 / Data Flight No. 15 / Mission 446 / Roll No. 606
Negative

Roll 18

800911
JSC X-band
Site No. 254 – California Costal Area
Data Flight No. 6 / Project 0A-0787 / Mission 429 / Roll 604-A / Aircraft 926 / Kel-Baker / Algodones and Mohawk Dunes / H-H and H-V
Positive

Roll 19

800911
JSC X-band
Site No. 130 – Southern California
Data Flight No. 7 / Project 0A-0836 / Mission 429 / Roll 604-B / Kelso Dunes, Amboy, Bristol Lake, Cadiz Dunes, Pisguah [?]
Positive

Roll 20

810319
JSC X-band
Site No. 029 & 027 – Algodones and Mohawk Dunes
Data Flight No. 12 / Project 0A-0787R1 / Mission 438 / Roll 605 / Aircraft 926 / H-H and H-V
Positive

Roll 21

810319
JSC X-band
Site No. 029 & 027 – Algodones and Mohawk Dunes
Data Flight No. 12 / Project 0A-0787R1 / Mission 438 / Roll 605 / Aircraft 926 / H-H and H-V
Positive

Roll 22

810825
JSC X-band
Site No. 254 – Algodones Dunes, California
Data Flight No. 12 / Flight No. 12 / Project 0A-0787R1 / Mission 447 / Roll 605

810826
JSC X-band
Site No. 254 – Mohawk Dunes, Arizona
Data Flight No. 12 / Flight No. 13 / Project 0A-0787R1 / Mission 446 / Roll 606

810827
JSC X-band
Site No. 033 & 285 – Craters of the Moon, Idaho & Patrick Draw, Wyoming
Data Flight No. 15 / Flight No. 14 / Project 0A-0787R1 / Mission 447 / Roll 607