The Challenges and Opportunities For International Cooperative Radio Science; Experience with Mars Express and Venus Express Missions

Dwight P. Holmes[1] and Tommy Thompson.[2]
Jet Propulsion Laboratory, California Institute of Technology, Pasadena CA 91711, USA

Richard Simpson[3] and G. Leonard Tyler[4]
Stanford University, Palo Alto, CA, 94303, USA

Veronique Dehant[5] and Pascal Rosenblatt[6]
Royal Observatory of Belgium, Brussels, Belgium

Bernd Häusler[7]
Universität der Bundeswehr, München, Germany

Martin Pätzold[8]
Rheinisches Institut Für Umweltforshung Abteilung Planetenforschung, Universität zu Köln, Germany

Gene Goltz[9] and Daniel Kahan[10]
Jet Propulsion Laboratory, California Institute of Technology, Pasadena CA 91711, USA

Jose Valencia[11]
ITT Industries,Monrovia, CA, 91016

---

[1] TMS Manager, Mission Commitments Office, Jet Propulsion Laboratory 4800 Oak Grove Dr., Pasadena, CA , USA 91109 MS 126-238.
[2] Manager-Mars Express/NASA Project at Jet Propulsion Laboratory, 4800 Oak Grove Dr., Pasadena, CA, USA 91109, M/S 300-227.
[3] Research Scientist, Department of Electrical Engineering, Stanford University, Palo Alto, CA, 94303,USA MC9515
[4] Professor, Department of Electrical Engineering, Stanford University, Palo Alto, CA, 94303, USA MC 9515
[5] Section Head, 'Time, Earth Rotation, and Space Geodesy', Royal Observatory of Belgium, Avenue Circulaire, 3, B-1180 Brussels, Belgium
[6] Researcher 1st Assistant, Planetary Geodesy, Royal Observatory of Belgium, Avenue Circulaire, 3, B-1180 Brussels, Belgium
[7] Professor, Universität der Bundswehr, Muenchen, Wener-Heisenberg-Weg 39, 85577, Neubiberg, Germany
[8] Principal Scientist, Rheinisches Institut für Umweltforshung Abteilung Planetenforschung, Aachenerstr. 209, Köln, Germany
[9] Senior Engineer, Radio Science Systems Group, Jet Propulsion Laboratory 4800 Oak Grove Dr. Pasadena, CA 91109, USA MS 230-215
[10] Engineer, Radio Science Systems Group, Jet Propulsion Laboratory 4800 Oak Grove Dr., Pasadena, CA 91109, USA, MS 230-215
[11] Network Operations Project Engineer, Mission Planning and Engineering, ITT Industries, 1400 S. Shamrock Ave., Monrovia, CA 91015, USA B 1400-300

Radio Science is an opportunistic discipline in the sense that the communication link between a spacecraft and its supporting ground station can be used to probe the intervening media remotely. Radio science has recently expanded to greater, cooperative use of international assets. Mars Express and Venus Express are two such cooperative missions managed by the European Space Agency with broad international science participation supported by NASA's Deep Space Network (DSN) and ESA's tracking network for deep space missions (ESTRAK). This paper provides an overview of the constraints, opportunities, and lessons learned from international cross support of radio science, and it explores techniques for potentially optimizing the resultant data sets.

Nomenclature

DDOR	=	Delta Differenced One-way Range
DSN	=	Deep Space Network
dBm	=	Decibels reference to 1 milliwatt
ESA	=	European Space Agency
ESOC	=	European Space Operation Centre
ESTRACK	=	ESA Tracking Network
GM	=	Standard gravitational parameter
HGA1	=	High Gain Antenna 1 (for VEX)
HGA2	=	High Gain Antenna 2 (for VEX)
IFMS	=	Intermediate Frequency MODEM System
JPL	=	Jet Propulsion Laboratory
LHCP	=	Left Hand Circularly Polarized
MEX	=	Mars Express
MODEM	=	Modulator / Demodulator
MTP	=	Medium Term Plan
NASA	=	National Aeronautics and Space Administration
Quaternion	=	A mathematical extension of non-commutative algebra of complex numbers used in the calculation of three dimensional rotations.
RHCP	=	Right Hand Circularly Polarized
RSR	=	Radio Science Receiver
USO	=	Ultra Stable Oscillator
VEX	=	Venus Express
VLBI	=	Very Long Baseline Interferometry
WoL	=	Wheel off-Loading

I. Introduction

A. Brief Historical Background

Radio Science, as a discipline, has been taking advantage of the communications links on spacecraft almost since there were missions beyond Earth orbit. In fact, in a different form than discussed in this paper, Radio Science was being conducted from Earth orbit to gain a better understanding of the Earth's Ionosphere from the top side, as well as Electron content and Faraday effects. The very nature of Radio Science is to utilize those effects which perturb/affect radio propagation to, in fact, probe the medium itself.

NASA's Deep Space robotic missions have been using Radio Science to make in situ measurements since the early 1960s.[1] With the development of ESA's deep space network consisting of 35m antennas at New Norcia, Australia, and Cebreros, Spain[2], ESA has entered the field of acquiring radio science data with its own network. Similarly, ESA has implemented a radio science acquisition receiver based on the Intermediate Frequency MODEM (IFMS)[3] system which is used for the acquisition of telemetry data. The NASA radio science systems and the ESA radio science system are not compatible, both in the architecture of the receivers and the formatted sampled data output. It is up to the respective science teams to exchange data in an intermediate format for analysis. This is not to say that the teams cannot process the fundamental data sets if they so desire. The NASA system is published and documented as an External DSN Interface Standard[4]. The ESA system was developed under contract to BAE systems, which generated similar documentation for the both operations and output data formats[5].

Mars Express and Venus Express missions are the first ESA missions to exercise the acquisition of radio science data. From the beginning, there has been strong cooperation between respective science teams. They not only share resources but science investigators as well. Data analysis reviews, operations, and science planning are conducted across the teams at radio science team meetings several times per year. This level of cooperation has proven useful in several areas. The experience of the U.S. investigators has enabled the confirmation of results that European investigators have obtained with the ESA data. Conversely, experience with a newer radio science system at ESA deep space stations has expanded the potential data set for both Venus and Mars radio science observations.

B. Making Measurements Over Time

In making a case for continued radio science observations through international cooperation, it should be pointed out that radio science can be conducted relatively simply with a modest to no investment in the spacecraft, however, a modest investment greatly improves the data set. The major investment is in the ground system hardware at the tracking stations in which both NASA and ESA have committed resources. Secondly, the tracking station is a fixed asset and does not generally incur a per-Mission cost element except for operations. The opportunity lies in the fact that any mission can be used to make radio science in situ measurements for temperature and pressure of the neutral atmosphere and its constituent components, ionospheric data, etc. over numerous mission time scales. For example, each of the spacecraft at Mars, sponsored by NASA and ESA are collecting complimentary data over a time scale that is greater than any one mission could possibly accomplish. Radio science is the one discipline that can sample the planetary environment over time scales that provide insight into global changes that occur as long as an active spacecraft is present, without having to build specialized hardware for each spacecraft. International cooperation with radio science ensures sampling over time scales that are longer than any one mission or project.

II. Experience with MEX and VEX

A. International Cooperation

Radio Science Team operations within this international cooperative environment have experienced several challenges. The first and foremost is the way the teams are selected. The primary sponsoring agency makes selections of team members based on science proposals; however, supporting agency(s) must agree on the ground rules for funding their own science participants. As an example, the MEX teams received approval from ESA and NASA, and since NASA had a number of cooperative instruments on board the spacecraft it was a simple matter of developing and then funding a U.S. Mars Express project to manage the U.S. interests. However, the Venus Express experience was quite different. U.S. participation was selected by ESA based on submitted proposals, but NASA never authorized a U.S. Venus Express project, partly because the process did not include NASA from the very beginning. Without a funded project there was no way to develop or analyze the experiment data. NASA eventually funded U.S. participants at a minimal level, but there was still no project funding. The lack of a named U.S. project and the funding that goes along with it has caused a number of major problems. DSN support, although covered under a service-oriented aperture fee arrangement supported by NASA, only pays for tracking time and minimal engineering services. It does not cover scheduling the radio science support or the production of ancillary data products, and it does not pay for any mission services which lie outside data acquisition, such as communications circuits and testing or any navigation efforts. As a result, Venus Express radio science has suffered and so has NASA, because there has been no funding for archiving data products. Archived data products are the seed corn of future analysis, mission design, and basic currency of scientific research. The real lesson here is that one should never enter into a project starving. The systems and organizations in place to fund research generally do not get more generous over time. Table 1 provides a quick look at team participation.

MEX & VEX Radio Science Experiment Team Responsibilities
Table 1.

Institution	Atmosphere/ Ionosphere	Solar Corona	Bistatic RADAR	Gravity
Stanford University, Palo Alto California	MEX & VEX data verification and analysis	MEX & VEX data verification and analysis	MEX & VEX Principle Investigation	MEX & VEX data verification
Observatoire Royal, Bruxelles, Belgium				MEX & VEX
Universität der Bundeswehr, München, Germany	VEX with analysis support for MEX	VEX and MEX	MEX & VEX data analysis	
Rheinisches Institut für Umweltforshung Abteilung Planetenforschung, Universität zu Köln, Germany	MEX with analysis support for VEX	MEX and VEX	MEX & VEX data analysis	Phobos
University of Bonne, Bermany	MEX and VEX	MEX and VEX	Support analysis	
Jet Propulsion Laboratory, Pasadena, California / Deep Space Network	DSN Data capture and delivery	DSN Data capture and delivery	DSN Data capture and delivery	DSN Data capture and delivery
European Space Operations Centre / ESTRACK	ESTRACK Data capture and delivery	ESTRACK Data capture and delivery	No role	Capture & Deliver tracking data

B. Radio Science Planning

The spacecraft bus is a constrained resource. In any planetary mission, be it to explore Venus or Mars, the collection of instruments selected by the supporting agency is planned to meet a set of specific objectives, be it a search for water, future landing sights, or the evolution of the atmosphere. There are always numerous constraints for time, viewing angle, spacecraft orientation, and downlink data bandwidth. Each science operations working team must decide what is most important for any particular observation. Radio science is certainly no exception. In most cases, in order to make certain radio science observations, other systems which compete for spacecraft resources must be either turned off, or placed in record only mode. To be able to distinguish effects on the downlink signal caused by the medium, an unperturbed transmitter carrier signal is a requirement. It means that the cleanest carrier contains no modulation, either telemetry or ranging. This is a severe constraint when one considers that all the onboard instruments besides radio science need the telemetry "on" to transfer the data to the ground. However, there is an additional constraint for radio science, and that constraint is the instrument on the ground – the tracking station.

In the first half year of operation, the MEX mission success at getting radio science acquisitions up to the team's planned level of operation was a significant challenge. If the observation was not deleted by the mission planning team, the desired station became unavailable or suffered a failure. The initial loss rate for radio science acquisitions was on the order of 36% after mission planning system checks. The remainder had a cancellation/loss rate on the order of 14% after ESOC approval, with an additional loss of 32% due to failure of some kind. Of course, part of this could be attributed to growing pains which included events such as; sequence timing errors, the wrong sequence, wrong sample rates, etc. In all, the radio science occultation success rate was a dismal 18%. By 2006 the success rate had significantly improved. Figures 1 & 2, from the July 2006 VEX/MEX Radio Science Team meeting demonstrate the typical statistics for each of the Medium Term Plans with respect to radio science activity.

	successfully performed	cancelled by MPS	failed	comment
MTP21				
occultation	13	0	18	s/c in safe mode
target gravity	0	0	0	
global gravity	8	0	12	s/c in safe mode
Bistatic Radar	0	0	0	
sum	**21**	**0**	**30**	
percentage	**41.2%**	**0.0%**	**58.8%**	
MTP22				
occultation	56	1	0	
target gravity	2	0	0	
global gravity	14	0	5	
Bistatic Radar	2	0	0	
sum	**74**	**1**	**5**	
percentage	**92.5%**	**1.3%**	**6.3%**	
MTP23				
occultation	24	0	0	data missing on DDS
target gravity	0	0	0	large noise at S-band
global gravity	17	0	0	
Bistatic Radar	0	0	0	
sum	**41**	**0**	**0**	
percentage	**100.0%**	**0.0%**	**0.0%**	

Figure 1. Radio science observation statistics for MTP 21 through 23

	successfully performed	cancelled by MPS	failed	comment
MTP24				
occultation	19	0	2	
target gravity	0	0	0	
global gravity	26	0	0	
Phobos	1	0	0	450 km
Bistatic Radar	2	0	0	
sum	**48**	**0**	**2**	
percentage	**96.0%**	**0.0%**	**4.0%**	
MTP25				
occultation	14	0	0	
target gravity	3	0	0	
global gravity	22	9	0	low power
Phobos	0	0	0	
Bistatic Radar	2	0	0	
sum	**41**	**9**	**0**	
percentage	**82.0%**	**18.0%**	**0.0%**	
MTP26				
occultation	0	0	0	
target gravity	3	0	1	
global gravity	20	13	0	low power
Phobos	0	0	0	
Bistatic Radar	2	0	0	
sum	**25**	**13**	**1**	
percentage	**64.1%**	**33.3%**	**2.6%**	

Figure 2. Radio science observation statistics for MTP 24 through 26

C. Radio Occultation – Atmospheres, Ionospheres, and the Solar Corona

As the authors briefly pointed out in the introduction, with the spacecraft transponder as the source, perturbations of the telecom carrier signal, (i.e. changes in phase, frequency, polarization, and amplitude) are the data set for deriving scientific information. The object is to de-convolve the signal to establish the parameters of the medium that created the set of perturbations. It becomes obvious that in order to conduct a valid experiment, everything must be done to minimize "signal distortions" not created by the medium that the telecommunications signal passes through. In this context, telemetry is a signal distortion to the radio scientist.

The objective is to establish as clean a signal as possible with only "known" distortions that can be modeled out during the analysis phase. It has been a practice on many U.S. missions to include an ultra stable oscillator (USO) as the telecom reference signal in order to minimize frequency drift and reduce sideband noise. In general this oscillator is significantly more stable than the primary transponder auxiliary oscillator, by more than several orders of magnitude. Unfortunately, Mars Express did not implement a USO into the telecommunications subsystem onboard the spacecraft,, however, the Venus Express project did. During the commissioning phase of the VEX mission, the USO proved to be operating within its design goals. The Allan variance of the VEX USO was confirmed to be on the order of 5to6 E-13 over a 10-second interval.

As is generally the case in two-way operation, the spacecraft receiving subsystem is phase locked to an uplink from a ground station. Phase locking the uplink signal removes the Doppler prior to any receiver processing, thus allowing command and data upload to be captured by the transponder. The spacecraft is, in essence, an active signal repeater. It turns the signal around by translating it to a separate downlink frequency with a well- known turnaround ratio. For radio science, the closed-loop tracking system provides a reliable reference but it is not free from disturbance, and when the uplink signal goes away, the reference is gone. The picture is that one can make measurements using a closed-loop system at the ingress to a planetary occultation, taking into account all of the know perturbations on the signal. However, during occultation exit, on the other side of the planet, there is no uplink reference and the downlink signal is referenced to the significantly less stable local oscillator - which adds further unknowns to the signal quality.

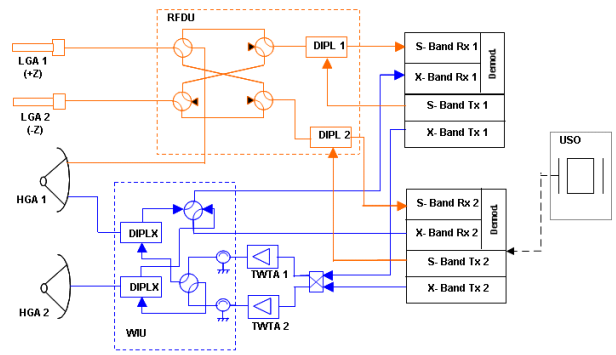

Fig 3. VEX TT&C Subsystem Block Diagram with USO
Courtesy of European Space Agency

Venus Express has used the USO successfully and has been able to get deep atmospheric sampling at both occultation ingress and egress utilizing the DSN 70-meter antennas. However, atmospheric and ionospheric occultation data are generally acquired on the MEX and VEX projects with ESA 35m ESTRACK stations. In fact ESA has been able to collect precision occultation data, capturing the signal during the complete occultation path. The hardware and software were adapted by ESA out of the IFMS. Compared with the NASA radio science receivers, thee are several differences in implementation, which we do not believe are significant to the science team. The major difference is in implementation. The DSN operates the radio science receivers, during an occultation pass by tuning the receivers with both the effects of the Doppler and the atmosphere modeled. In that way, the sampled signal can be contained within a fairly narrow sample bandwidth. On the order of 100 KHz. ESA operations of the radio science IFMS receiver, only models the Doppler. Therefore, wider bandwidths are required to capture signal dynamics and significantly more data. Recording channels bandwidths are on the order of 2 MHz. The larger bandwidth imposes greater processing constraints on the science team and could conceivably become an issue if raw data products are exchanged among the international colleagues. Figure 4. is a schematic example of an occultation of the VEX spacecraft by the planet Venus, with the radio signal bending through the atmosphere.

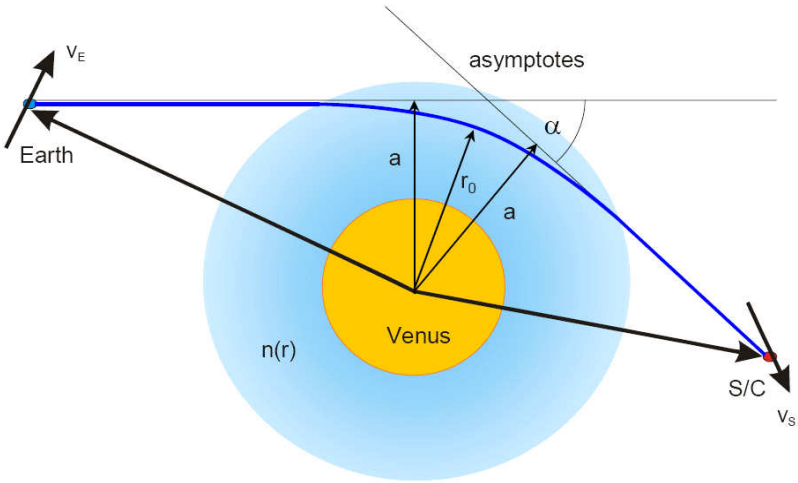

Figure 4. Schematic of a Venus Occultation Experiment

D. Bistatic Radar - Planetary Surface Characteristics

Bistatic radar is defined as a radar system in which the transmitter is physically separated from the receiver. In this case that physical distance is very large the distance from Mars to Earth in the MEX case, and the distance from Venus to Earth in the VEX case. Fundamentally, the spacecraft is the transmitter, already a part of the telecommunications subsystem, and a deep space ground station is the receiver. The experiment utilizes both of the available downlink frequencies at S and X band to make calculations of the surface properties. (Reference 6 is an excellent treatise on the subject for planetary exploration.) The return signal captured by the ground station is extremely weak, dispersed, and contains information in both circularly polarized components, although a single polarization was originally transmitted. The only ground stations with both the necessary instrumentation and weak signal capture capability are, DSN 70m deep space antennas. There are three of these antennas; one at each of three DSN complexes separated approximately 120 degrees in longitude around the Earth. The challenge was to tune and calibrate the RF feed systems for the bistatic experiment in order to enable the full power of the experimenter's signal processing and analysis techniques.

The 70m antennas are used for planetary radar as an adjunct to their ability to track spacecraft. These antennas were built with feed systems that included the distribution of both the right and left circularly polarized signals into the radio science receiving system. However, not all front ends are alike and not all feed systems are alike. What was important was to balance each polarization signal path with respect to contributed noise. A 70m station in normal operations for a tracking pass will select a downlink path, through couplers and switches which maximize the signal-to-noise ratio for telemetry reception. At the beginning of each pass the station had to be reconfigured so that dual polarization paths for each frequency could be calibrated and balanced. For the science team to get the true reflected signal power, the station path losses and loss differences had to be known precisely and the system noise temperature had to measured prior to the beginning of a pass, during a pass, and at the end of the pass. This took several months of testing each 70m station at each complex then generating a detailed set of calibration procedures. It has been a continuous challenge to get all of this to work for a bistatic radar experiment; but when it does, return echoes can be extracted out of the captured signal that are not visible in real time. Since this is a procedure that is not part of normal operations, it requires diligence to ensure the paths are configured correctly, and the noise measuring systems are applied correctly. In fact, the experimenter is generally present at the radio science subsystem control point to ensure all goes well during each pass. The opportunity for future operations in all of this might be that configurations that optimize the antennas for the collection of science data needs to be considered as part of the overall control architecture of a tracking station. The 70-meter antenna's fundamental job is to provide command, telemetry and tracking, but by its very nature and precision, it is an ideal instrument for science[1].

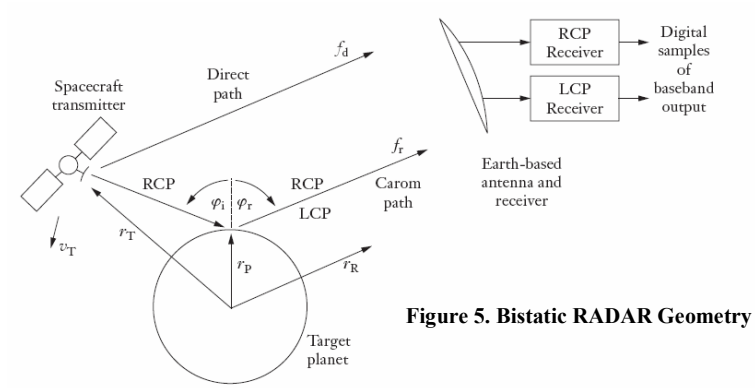

Figure 5. Bistatic RADAR Geometry

Bistatic radar experiments have been conducted at both Mars and Venus with great success[7]. The Mars Express bistatic experiments continue as spacecraft resources and target opportunities become available. Unfortunately, the Venus Express effort has met an untimely end. An anomaly in the S-band subsystem has caused a 15 dBm loss of S-band power on High Gain Antenna 1 (HGA1), making dual frequency experiments useless. Because of a spacecraft design consideration, S-band is not available on the backup high gain antenna (HGA2). (See Figure 3) In fact one pass was conducted with the degraded signal but post processing could not reveal any surface reflections. Without the dual frequency capability of simultaneous S and X band transmissions, the scientific value of further bistatic efforts is lost. Note that occultation data continue to be collected with the VEX X-band spacecraft signal.

III. Radio Science Data for Gravity Acceleration and Orbit Determination

Two-way Doppler shift measurements as well as ranging measurements of a spacecraft orbiting around Mars can be used to reconstruct the orbit of the spacecraft and its time and space variations during the mission. These data are further used to provide information on global properties of Mars.

The spacecraft undergoes gravitational attractions as well as non-gravitational forces. The most important effect on the spacecraft is the static gravitational attraction of Mars, of which the value has been determined from past missions. The gravitational attraction of Mars can be represented by a gravity potential field developed in spherical harmonics. The latest spherical harmonic model of Mars' gravity field, JGM95J, has been developed up to degree and order 95 (Konopliv et al., 2006)[8]. New spacecrafts further complete this gravity field and its time variations.

A. Gravity on Targets

When using restricted harmonics up to degree and order 50, it is possible to reconstruct the residual acceleration of the spacecraft above a target and, consequently, to get information on the local crust density, the lithospheric thickness, and possible internal loading. The large mass anomaly induced by the Tharsis region is one typical example studied with Mars Express (see Beuthe et al., 2006)[9]. During the nominal mission, MEX performed about 30 successful gravity passes at pericenter. The comparison of the new MEX gravity data with the existing gravity models showed that an average over a few MEX passes gives as good results as a gravity model based on a dense coverage at higher altitude (see Beuthe et al., 2006)[9]. With the objective of distinguishing density differences of 200 kg/m^3, it is necessary to obtain a large amount of data above a region. Precision on the data themselves must be high enough so that the signal would not be imbedded in the noise. Our experience is that it is better to obtain a high signal-to-noise level, a situation improved far from the solar conjunction even if the two frequencies are used to correct the plasma effect. The shortest distance from Earth to Mars has to be considered as well for a better noise level. The amplitude of the gravity acceleration itself as produced by the target is of most importance. The higher the gravity acceleration is, the higher the signal- to-noise ratio is.

B. Time Variable Gravity Field

The process of sublimation and condensation of CO_2 in icecaps and atmosphere involved one fourth of the atmosphere over the seasons. These very large mass changes at the global scale induce changes in the gravity field as well as changes in the length-of-day of Mars. There are changes in the first coefficients of the gravity field as well as on Mars' rotation as shown in Cazenave and Balmino (1981)[10], Chao and Rubincam (1990)[11], Yoder and Standish (1997)[12], Defraigne et al. (2000)[13], and Van den Acker et al. (2002)[14], and Karatekin et al. (2006)[15]. In order to derive the time variable gravity field coefficients from the radio science observations it is necessary to model MEX motion with all gravitational and non-gravitational effects on the spacecraft included. The Belgian team has determined an accurate orbit of MEX by using the software called GINS (Géodésie par Intégration Numérique Simultanée) that has been developed by the Centre National d'Etudes Spatiales (CNES) and further adapted at the Royal Observatory of Belgium (ROB) for planetary geodesy applications. In this software the equations of motion of the spacecraft are numerically integrated on the basis of a model of all the forces acting on the spacecraft. The software simultaneously computes the partial derivatives of the Doppler and ranging tracking observables with respect to several parameters of this model that need to be determined. Gravitational (the static and the time-variable parts) and non-gravitational forces (the radiation pressure and the atmospheric drag) have been taken into account in the force budget. The non-gravitational forces are determined from a macro-model of the spacecraft (each face of the bus and the solar arrays that are subject to the forces). For the atmospheric drag, one uses a model of the density of the Martian atmosphere at high altitude and adjusts (using a scaling factor) the model for its imperfections. For the radiation pressure, one uses spatial and temporal models of the albedo and thermal emission of Mars, in addition to the solar radiation pressure (Lemoine, 2002)[16] as well as the properties of the material used on each face of the spacecraft. The orientation of the bus with respect to an inertial frame is modeled on the basis of sets of "quaternions" provided by ESOC. Since the quaternions for the orientation of the solar arrays with respect to the bus were not available, it was difficult to estimate the non-gravitational forces without an additional constraint: the solar arrays have been supposed to be oriented toward the Sun given the orientation of the bus. In a future experiment it would be very valuable to obtain the quaternions of the solar panels in addition to those of the bus. In addition to the atmospheric drag and the radiation pressure effects, the maneuvers as well as the Wheel off-loading (WoL) events must be taken into account in the modeling. Such events produce changes in the velocity (or delta-V) of the spacecraft. The WoL usually occurs once per day and at high altitude phases of the orbit. These events are difficult to reconstruct if they are not tracked from the Earth. Because it is important to obtain them, if a high-accuracy orbit

for the spacecraft is wanted, the maneuvers and WoL events are tracked by the ground stations. This is not always possible as it depends on the availability of the ground stations shared by the different space missions. For Mars Express, this was, in fact, the main limitation of the orbit precision. The only way to correctly derive the gravitational field and its time variations from the Doppler and ranging data of a spacecraft is, indeed, to be able to properly model the non-gravitational changes in the orbit.

C. Phobos Flybys and Phobos Effects on MEX Orbit

The tracking data from Mars Express have also been used for getting information on Phobos mass from flybys of the spacecraft. These flybys have to be performed when the spacecraft is very close to the moon (less than 100-200 km) and enough tracking data around the flyby must be taken in order to be able to reconstruct the trajectory and assess the gravitational perturbation of Phobos. At present, we have only one flyby of Phobos at 460km. At this step and at such a distance, it must be mentioned that the relative position of the Earth is important for the precision on the reconstructed orbit: The Earth-Mars line-of-sight must maximize the sensitivity. It is also important to have information on the orbit from tracking on either side of the flyby event.

In parallel, the high eccentricity of MEX orbit provides a high sensitivity to the cumulative effects of Phobos. Indeed, Phobos , in addition to the planet Mars, exerts a gravity perturbation on the spacecraft's orbit. Phobos, and to a minor extent Deimos, induce a secular drift of the orbital elements of the spacecraft. This has allowed Konopliv et al. (2006)[8] to estimate the GM of Phobos and Deimos from the MGS and Odyssey data, although the sensitivity is not very high. The higher eccentricity orbit of the MEX orbit has allowed Rosenblatt et al. (2008)[17] to determine these GM with a better precision. An accurate MEX orbit determination has indeed been obtained by fitting tracking and ranging radio data from MEX and therewith, the GM of Phobos has been determined.

IV. Conclusion

Opportunities abound for radio science observations. By its very nature, it is an opportunistic discipline because specific resources to conduct radio science experiments do not have to be extensive. The ability to collect data on planetary environments over extended mission time-lines, can provide a wealth of information on trends, which a few samples over a short time cannot. However, this makes the discipline too easy to treat as a science afterthought. The configuration of the telecommunications system on board the spacecraft with radio science in mind can easily multiply its return. A USO on MEX could have captured both ingress and egress occultation periods. An S-band feed on HGA2 on the backup transponder for VEX could have prevented the loss of bistatic radar data that had shown great promise with it initial observations of Maxwell Monte. And finally, tracking stations are great observatory assets. The sensitivity and timing accuracy necessary for deep space tracking also makes them extremely valuable as an instrument for science. Unfortunately, national funding constraints keep the resources for radio science limited. Economically, one should consider the fact that the cost of an instrument on board a spacecraft is a "sunk" cost, and the instrument is lost forever at the conclusion of the mission. Instruments on the ground are accessible and available to many projects, and with equivalent investment can provide a continued return on investment.

Acknowledgments

The authors would like to thank the various international organizations listed in Table 1 for their fine support. We would also specially like to thank the operations and engineering teams within NASA's DSN and the Europeans Space Agency's Operations Center (ESOC), for without them the data could never have be taken. Within the US the Radio Science Systems Group for its continued dedication to validating and delivering the data. Finally the ESA MEX and VEX projects themselves for their support of this unique discipline. The work of the Belgian partners was financially supported by the Belgian PRODEX program managed by the European Space Agency in collaboration with the Belgian Federal Science Policy Office. Some of the research described in this paper was carried out at the Jet Propulsion Laboratory, California Institute of Technology, under a contract with the National Aeronautics and Space Administration.

References

1. N. A. Renzetti, A.L. Berman, *The Deep-Space Network – An Instrument for Radio Science Research,* NASA, Jet Propulsion Laboratory, California Institute of Technology, Pasadena California; JPL Pub 80—93, 15 February 1981
2. R. Martein and M. Warhaut, *ESA's 35-Meter Deep Space Antennas at New Norcia/Western Australia and Cebreros/Spain*, IEEEAC paper #1294, Version2, Updated December 3, 2003
3. R. Madde, T. Morely, M. Lanucara, R. Abello, M. Mercolino, J. DeVincente and G. Sessler *A Common receiver Architecture for ESA Radio Science and Delta DOR Support*, Proceedings of the IEEE,Vol 95, No. 11, November 2007
4. 820-013, Deep-Space Mission System (DSMS) External Interface Specification, JPL D-16765, *0159-Science- Radio Science Receiver Standard Formatted Data Unit (SFDU),* 28 February 2001
5. N. James, *IFMS ICD for IFMS ESU Datasets*, BAE Systems Advanced Technology Centre, West Hanningfield Road, Chelmsford, Essex, CM2 8HN, Great Britain, 18 January 2006.
6. R. A. Simpson, "Planetary Exploration," Chapter 5 in *Advances in Bistatic Radar,* edited by N. C. Willis and HGriffiths. Raleigh, North Carolina: SciTech Publishing, 650 p., 2007
7. R. A. Simpson, G. L. Tyler, Martin Paetzold, and Bern Hausler, 2006 "Determination of Local Surface Properties Using Mars Express Bistatic Radar" J. Geophysical Res., 111, doi: 10.1029/2005JE002580.
8. Konopliv A., Yoder C., Standish E.M., Yuan Dah-Ning, and Sjogren W.L., 2006, A global solution for the Mars static and seasonal gravity, Mars orientation, Phobos and Deimos masses, and Mars ephemeris, Icarus, 182(1), 23-50, 10.1016/j.icarus.2005.12.025.
9. Beuthe M., Rosenblatt P., Dehant V., Barriot J.-P., Pätzold M., Häusler B., Karatekin Ö., Le Maistre S., and Van Hoolst T., 2006, "Assessment of the Martian gravity field at short wavelength with Mars Express.", Geophys. Res. Letters, 33, L03203, DOI: 10.1029/2005GL024317.
10. Cazenave A. and Balmino G., 1981, Meteorological effects on the seasonal variations of the rotation of Mars, Geophys. Res. Letters, 8, 245-248.
11. Chao B.F. and Rubincam D.P., 1990, Variations of Mars gravitational field and rotation due to seasonal CO_2 exchange, J. Geophys. Res., 95, 14755-14760.
12. Yoder C.F. and Standish E.M., 1997, Martian moment of inertia from Viking lander range data, J. Geophys. Res., 102 (E2), 4065-4080
13. Defraigne P., de Viron O., Dehant V., Van Hoolst T., and Hourdin F., 2000, Mars rotation variations induced by atmospheric CO_2 and winds, J. Geophys. Res. (Planets), 105, E10, 24563-24570.
14. Van den Acker E., Van Hoolst T., de Viron O., Defraigne P., Dehant V., Forget F., and Hourdin F., 2002, Influence of the winds and of the CO_2 mass exchange between the atmosphere and the polar ice caps on Mars' orientation parameters, J. Geophys. Res., 10.1029/2000JE001539.
15. Karatekin Ö., Dehant V., and Van Hoolst T., 2006, "Martian global-scale CO2 exchange from time-variable gravity measurements.", J. Geophys. Res., 111, E06003, DOI: 10.1029/2005JE002591.
16. Lemoine F.G., Smith D.E., Rowlands D.D., Zuber M.T., Neumann G.A., Chinn D.S., and Pavlis D.E., 2001, An improved solution of the gravity field of Mars (GMM-2B) from Mars Global Surveyor, J. Geophys. Res., 106(E10), 23359-23376, DOI: 10.1029/2000JE001426.
17. Rosenblatt et al., 2008, Accurate Mars Express orbits to improve the determination of the mass and ephemeris of the Martian moons, Planet. Space Sci., doi: 10.1016/j.pss.2008.02.004.

The Challenges and Opportunities For International Cooperative Radio Science; Experience with Mars Express and Venus Express Missions

Dwight P. Holmes[1] and Tommy Thompson.[2]
Jet Propulsion Laboratory, California Institute of Technology, Pasadena CA 91711, USA

Richard Simpson[3] and G. Leonard Tyler[4]
Stanford University, Palo Alto, CA, 94303, USA

Veronique Dehant[5] and Pascal Rosenblatt[6]
Royal Observatory of Belgium, Brussels, Belgium

Bernd Häusler[7]
Universität der Bundeswehr, München, Germany

Martin Pätzold[8]
Rheinisches Institut Für Umweltforshung Abteilung Planetenforschung, Universität zu Köln, Germany

Gene Goltz[9] and Daniel Kahan[10]
Jet Propulsion Laboratory, California Institute of Technology, Pasadena CA 91711, USA

Jose Valencia[11]
ITT Industries,Monrovia, CA, 91016

---

[1] TMS Manager, Mission Commitments Office, Jet Propulsion Laboratory 4800 Oak Grove Dr., Pasadena, CA , USA 91109 MS 126-238.
[2] Manager-Mars Express/NASA Project at Jet Propulsion Laboratory, 4800 Oak Grove Dr., Pasadena, CA, USA 91109, M/S 300-227.
[3] Research Scientist, Department of Electrical Engineering, Stanford University, Palo Alto, CA, 94303,USA MC9515
[4] Professor, Department of Electrical Engineering, Stanford University, Palo Alto, CA, 94303, USA MC 9515
[5] Section Head, 'Time, Earth Rotation, and Space Geodesy', Royal Observatory of Belgium, Avenue Circulaire, 3, B-1180 Brussels, Belgium
[6] Researcher 1st Assistant, Planetary Geodesy, Royal Observatory of Belgium, Avenue Circulaire, 3, B-1180 Brussels, Belgium
[7] Professor, Universität der Bundswehr, Muenchen, Wener-Heisenberg-Weg 39, 85577, Neubiberg, Germany
[8] Principal Scientist, Rheinisches Institut für Umweltforshung Abteilung Planetenforschung, Aachenerstr. 209, Köln, Germany
[9] Senior Engineer, Radio Science Systems Group, Jet Propulsion Laboratory 4800 Oak Grove Dr. Pasadena, CA 91109, USA MS 230-215
[10] Engineer, Radio Science Systems Group, Jet Propulsion Laboratory 4800 Oak Grove Dr., Pasadena, CA 91109, USA, MS 230-215
[11] Network Operations Project Engineer, Mission Planning and Engineering, ITT Industries, 1400 S. Shamrock Ave., Monrovia, CA 91015, USA B 1400-300

Radio Science is an opportunistic discipline in the sense that the communication link between a spacecraft and its supporting ground station can be used to probe the intervening media remotely. Radio science has recently expanded to greater, cooperative use of international assets. Mars Express and Venus Express are two such cooperative missions managed by the European Space Agency with broad international science participation supported by NASA's Deep Space Network (DSN) and ESA's tracking network for deep space missions (ESTRAK). This paper provides an overview of the constraints, opportunities, and lessons learned from international cross support of radio science, and it explores techniques for potentially optimizing the resultant data sets.

Nomenclature

DDOR	=	Delta Differenced One-way Range
DSN	=	Deep Space Network
dBm	=	Decibels reference to 1 milliwatt
ESA	=	European Space Agency
ESOC	=	European Space Operation Centre
ESTRACK	=	ESA Tracking Network
GM	=	Standard gravitational parameter
HGA1	=	High Gain Antenna 1 (for VEX)
HGA2	=	High Gain Antenna 2 (for VEX)
IFMS	=	Intermediate Frequency MODEM System
JPL	=	Jet Propulsion Laboratory
LHCP	=	Left Hand Circularly Polarized
MEX	=	Mars Express
MODEM	=	Modulator / Demodulator
MTP	=	Medium Term Plan
NASA	=	National Aeronautics and Space Administration
Quaternion	=	A mathematical extension of non-commutative algebra of complex numbers used in the calculation of three dimensional rotations.
RHCP	=	Right Hand Circularly Polarized
RSR	=	Radio Science Receiver
USO	=	Ultra Stable Oscillator
VEX	=	Venus Express
VLBI	=	Very Long Baseline Interferometry
WoL	=	Wheel off-Loading

I. Introduction

A. Brief Historical Background

Radio Science, as a discipline, has been taking advantage of the communications links on spacecraft almost since there were missions beyond Earth orbit. In fact, in a different form than discussed in this paper, Radio Science was being conducted from Earth orbit to gain a better understanding of the Earth's Ionosphere from the top side, as well as Electron content and Faraday effects. The very nature of Radio Science is to utilize those effects which perturb/affect radio propagation to, in fact, probe the medium itself.

NASA's Deep Space robotic missions have been using Radio Science to make in situ measurements since the early 1960s.[1] With the development of ESA's deep space network consisting of 35m antennas at New Norcia, Australia, and Cebreros, Spain[2], ESA has entered the field of acquiring radio science data with its own network. Similarly, ESA has implemented a radio science acquisition receiver based on the Intermediate Frequency MODEM (IFMS)[3] system which is used for the acquisition of telemetry data. The NASA radio science systems and the ESA radio science system are not compatible, both in the architecture of the receivers and the formatted sampled data output. It is up to the respective science teams to exchange data in an intermediate format for analysis. This is not to say that the teams cannot process the fundamental data sets if they so desire. The NASA system is published and documented as an External DSN Interface Standard[4]. The ESA system was developed under contract to BAE systems, which generated similar documentation for the both operations and output data formats[5].

Mars Express and Venus Express missions are the first ESA missions to exercise the acquisition of radio science data. From the beginning, there has been strong cooperation between respective science teams. They not only share resources but science investigators as well. Data analysis reviews, operations, and science planning are conducted across the teams at radio science team meetings several times per year. This level of cooperation has proven useful in several areas. The experience of the U.S. investigators has enabled the confirmation of results that European investigators have obtained with the ESA data. Conversely, experience with a newer radio science system at ESA deep space stations has expanded the potential data set for both Venus and Mars radio science observations.

B. Making Measurements Over Time

In making a case for continued radio science observations through international cooperation, it should be pointed out that radio science can be conducted relatively simply with a modest to no investment in the spacecraft, however, a modest investment greatly improves the data set. The major investment is in the ground system hardware at the tracking stations in which both NASA and ESA have committed resources. Secondly, the tracking station is a fixed asset and does not generally incur a per-Mission cost element except for operations. The opportunity lies in the fact that any mission can be used to make radio science in situ measurements for temperature and pressure of the neutral atmosphere and its constituent components, ionospheric data, etc. over numerous mission time scales. For example, each of the spacecraft at Mars, sponsored by NASA and ESA are collecting complimentary data over a time scale that is greater than any one mission could possibly accomplish. Radio science is the one discipline that can sample the planetary environment over time scales that provide insight into global changes that occur as long as an active spacecraft is present, without having to build specialized hardware for each spacecraft. International cooperation with radio science ensures sampling over time scales that are longer than any one mission or project.

II. Experience with MEX and VEX

A. International Cooperation

Radio Science Team operations within this international cooperative environment have experienced several challenges. The first and foremost is the way the teams are selected. The primary sponsoring agency makes selections of team members based on science proposals; however, supporting agency(s) must agree on the ground rules for funding their own science participants. As an example, the MEX teams received approval from ESA and NASA, and since NASA had a number of cooperative instruments on board the spacecraft it was a simple matter of developing and then funding a U.S. Mars Express project to manage the U.S. interests. However, the Venus Express experience was quite different. U.S. participation was selected by ESA based on submitted proposals, but NASA never authorized a U.S. Venus Express project, partly because the process did not include NASA from the very beginning. Without a funded project there was no way to develop or analyze the experiment data. NASA eventually funded U.S. participants at a minimal level, but there was still no project funding. The lack of a named U.S. project and the funding that goes along with it has caused a number of major problems. DSN support, although covered under a service-oriented aperture fee arrangement supported by NASA, only pays for tracking time and minimal engineering services. It does not cover scheduling the radio science support or the production of ancillary data products, and it does not pay for any mission services which lie outside data acquisition, such as communications circuits and testing or any navigation efforts. As a result, Venus Express radio science has suffered and so has NASA, because there has been no funding for archiving data products. Archived data products are the seed corn of future analysis, mission design, and basic currency of scientific research. The real lesson here is that one should never enter into a project starving. The systems and organizations in place to fund research generally do not get more generous over time. Table 1 provides a quick look at team participation.

MEX & VEX Radio Science Experiment Team Responsibilities
Table 1.

Institution	Atmosphere/ Ionosphere	Solar Corona	Bistatic RADAR	Gravity
Stanford University, Palo Alto California	MEX & VEX data verification and analysis	MEX & VEX data verification and analysis	MEX & VEX Principle Investigation	MEX & VEX data verification
Observatoire Royal, Bruxelles, Belgium				MEX & VEX
Universität der Bundeswehr, München, Germany	VEX with analysis support for MEX	VEX and MEX	MEX & VEX data analysis	
Rheinisches Institut für Umweltforshung Abteilung Planetenforschung, Universität zu Köln, Germany	MEX with analysis support for VEX	MEX and VEX	MEX & VEX data analysis	Phobos
University of Bonne, Bermany	MEX and VEX	MEX and VEX	Support analysis	
Jet Propulsion Laboratory, Pasadena, California / Deep Space Network	DSN Data capture and delivery	DSN Data capture and delivery	DSN Data capture and delivery	DSN Data capture and delivery
European Space Operations Centre / ESTRACK	ESTRACK Data capture and delivery	ESTRACK Data capture and delivery	No role	Capture & Deliver tracking data

B. Radio Science Planning

The spacecraft bus is a constrained resource. In any planetary mission, be it to explore Venus or Mars, the collection of instruments selected by the supporting agency is planned to meet a set of specific objectives, be it a search for water, future landing sights, or the evolution of the atmosphere. There are always numerous constraints for time, viewing angle, spacecraft orientation, and downlink data bandwidth. Each science operations working team must decide what is most important for any particular observation. Radio science is certainly no exception. In most cases, in order to make certain radio science observations, other systems which compete for spacecraft resources must be either turned off, or placed in record only mode. To be able to distinguish effects on the downlink signal caused by the medium, an unperturbed transmitter carrier signal is a requirement. It means that the cleanest carrier contains no modulation, either telemetry or ranging. This is a severe constraint when one considers that all the onboard instruments besides radio science need the telemetry "on" to transfer the data to the ground. However, there is an additional constraint for radio science, and that constraint is the instrument on the ground – the tracking station.

In the first half year of operation, the MEX mission success at getting radio science acquisitions up to the team's planned level of operation was a significant challenge. If the observation was not deleted by the mission planning team, the desired station became unavailable or suffered a failure. The initial loss rate for radio science acquisitions was on the order of 36% after mission planning system checks. The remainder had a cancellation/loss rate on the order of 14% after ESOC approval, with an additional loss of 32% due to failure of some kind. Of course, part of this could be attributed to growing pains which included events such as; sequence timing errors, the wrong sequence, wrong sample rates, etc. In all, the radio science occultation success rate was a dismal 18%. By 2006 the success rate had significantly improved. Figures 1 & 2, from the July 2006 VEX/MEX Radio Science Team meeting demonstrate the typical statistics for each of the Medium Term Plans with respect to radio science activity.

	successfully performed	cancelled by MPS	failed	comment
MTP21				
occultation	13	0	18	s/c in safe mode
target gravity	0	0	0	
global gravity	8	0	12	s/c in safe mode
Bistatic Radar	0	0	0	
sum	**21**	**0**	**30**	
percentage	**41.2%**	**0.0%**	**58.8%**	
MTP22				
occultation	56	1	0	
target gravity	2	0	0	
global gravity	14	0	5	
Bistatic Radar	2	0	0	
sum	**74**	**1**	**5**	
percentage	**92.5%**	**1.3%**	**6.3%**	
MTP23				
occultation	24	0	0	data missing on DDS
target gravity	0	0	0	large noise at S-band
global gravity	17	0	0	
Bistatic Radar	0	0	0	
sum	**41**	**0**	**0**	
percentage	**100.0%**	**0.0%**	**0.0%**	

Figure 1. Radio science observation statistics for MTP 21 through 23

	successfully performed	cancelled by MPS	failed	comment
MTP24				
occultation	19	0	2	
target gravity	0	0	0	
global gravity	26	0	0	
Phobos	1	0	0	450 km
Bistatic Radar	2	0	0	
sum	**48**	**0**	**2**	
percentage	**96.0%**	**0.0%**	**4.0%**	
MTP25				
occultation	14	0	0	
target gravity	3	0	0	
global gravity	22	9	0	low power
Phobos	0	0	0	
Bistatic Radar	2	0	0	
sum	**41**	**9**	**0**	
percentage	**82.0%**	**18.0%**	**0.0%**	
MTP26				
occultation	0	0	0	
target gravity	3	0	1	
global gravity	20	13	0	low power
Phobos	0	0	0	
Bistatic Radar	2	0	0	
sum	**25**	**13**	**1**	
percentage	**64.1%**	**33.3%**	**2.6%**	

Figure 2. Radio science observation statistics for MTP 24 through 26

C. Radio Occultation – Atmospheres, Ionospheres, and the Solar Corona

As the authors briefly pointed out in the introduction, with the spacecraft transponder as the source, perturbations of the telecom carrier signal, (i.e. changes in phase, frequency, polarization, and amplitude) are the data set for deriving scientific information. The object is to de-convolve the signal to establish the parameters of the medium that created the set of perturbations. It becomes obvious that in order to conduct a valid experiment, everything must be done to minimize "signal distortions" not created by the medium that the telecommunications signal passes through. In this context, telemetry is a signal distortion to the radio scientist.

The objective is to establish as clean a signal as possible with only "known" distortions that can be modeled out during the analysis phase. It has been a practice on many U.S. missions to include an ultra stable oscillator (USO) as the telecom reference signal in order to minimize frequency drift and reduce sideband noise. In general this oscillator is significantly more stable than the primary transponder auxiliary oscillator, by more than several orders of magnitude. Unfortunately, Mars Express did not implement a USO into the telecommunications subsystem onboard the spacecraft,, however, the Venus Express project did. During the commissioning phase of the VEX mission, the USO proved to be operating within its design goals. The Allan variance of the VEX USO was confirmed to be on the order of 5to6 E-13 over a 10-second interval.

As is generally the case in two-way operation, the spacecraft receiving subsystem is phase locked to an uplink from a ground station. Phase locking the uplink signal removes the Doppler prior to any receiver processing, thus allowing command and data upload to be captured by the transponder. The spacecraft is, in essence, an active signal repeater. It turns the signal around by translating it to a separate downlink frequency with a well- known turnaround ratio. For radio science, the closed-loop tracking system provides a reliable reference but it is not free from disturbance, and when the uplink signal goes away, the reference is gone. The picture is that one can make measurements using a closed-loop system at the ingress to a planetary occultation, taking into account all of the know perturbations on the signal. However, during occultation exit, on the other side of the planet, there is no uplink reference and the downlink signal is referenced to the significantly less stable local oscillator - which adds further unknowns to the signal quality.

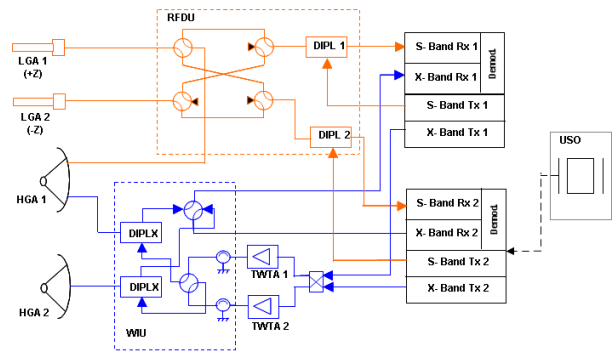

Fig 3. VEX TT&C Subsystem Block Diagram with USO
Courtesy of European Space Agency

Venus Express has used the USO successfully and has been able to get deep atmospheric sampling at both occultation ingress and egress utilizing the DSN 70-meter antennas. However, atmospheric and ionospheric occultation data are generally acquired on the MEX and VEX projects with ESA 35m ESTRACK stations. In fact ESA has been able to collect precision occultation data, capturing the signal during the complete occultation path. The hardware and software were adapted by ESA out of the IFMS. Compared with the NASA radio science receivers, thee are several differences in implementation, which we do not believe are significant to the science team. The major difference is in implementation. The DSN operates the radio science receivers, during an occultation pass by tuning the receivers with both the effects of the Doppler and the atmosphere modeled. In that way, the sampled signal can be contained within a fairly narrow sample bandwidth. On the order of 100 KHz. ESA operations of the radio science IFMS receiver, only models the Doppler. Therefore, wider bandwidths are required to capture signal dynamics and significantly more data. Recording channels bandwidths are on the order of 2 MHz. The larger bandwidth imposes greater processing constraints on the science team and could conceivably become an issue if raw data products are exchanged among the international colleagues. Figure 4. is a schematic example of an occultation of the VEX spacecraft by the planet Venus, with the radio signal bending through the atmosphere.

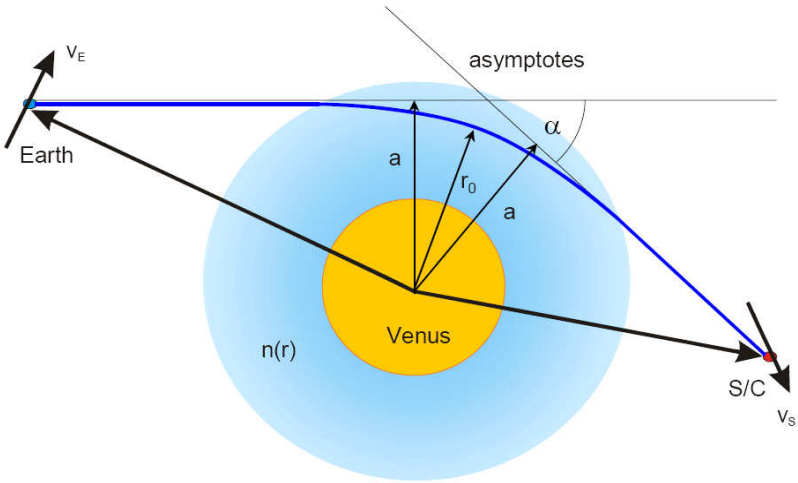

Figure 4. Schematic of a Venus Occultation Experiment

D. Bistatic Radar - Planetary Surface Characteristics

Bistatic radar is defined as a radar system in which the transmitter is physically separated from the receiver. In this case that physical distance is very large the distance from Mars to Earth in the MEX case, and the distance from Venus to Earth in the VEX case. Fundamentally, the spacecraft is the transmitter, already a part of the telecommunications subsystem, and a deep space ground station is the receiver. The experiment utilizes both of the available downlink frequencies at S and X band to make calculations of the surface properties. (Reference 6 is an excellent treatise on the subject for planetary exploration.) The return signal captured by the ground station is extremely weak, dispersed, and contains information in both circularly polarized components, although a single polarization was originally transmitted. The only ground stations with both the necessary instrumentation and weak signal capture capability are, DSN 70m deep space antennas. There are three of these antennas; one at each of three DSN complexes separated approximately 120 degrees in longitude around the Earth. The challenge was to tune and calibrate the RF feed systems for the bistatic experiment in order to enable the full power of the experimenter's signal processing and analysis techniques.

The 70m antennas are used for planetary radar as an adjunct to their ability to track spacecraft. These antennas were built with feed systems that included the distribution of both the right and left circularly polarized signals into the radio science receiving system. However, not all front ends are alike and not all feed systems are alike. What was important was to balance each polarization signal path with respect to contributed noise. A 70m station in normal operations for a tracking pass will select a downlink path, through couplers and switches which maximize the signal-to-noise ratio for telemetry reception. At the beginning of each pass the station had to be reconfigured so that dual polarization paths for each frequency could be calibrated and balanced. For the science team to get the true reflected signal power, the station path losses and loss differences had to be known precisely and the system noise temperature had to measured prior to the beginning of a pass, during a pass, and at the end of the pass. This took several months of testing each 70m station at each complex then generating a detailed set of calibration procedures. It has been a continuous challenge to get all of this to work for a bistatic radar experiment; but when it does, return echoes can be extracted out of the captured signal that are not visible in real time. Since this is a procedure that is not part of normal operations, it requires diligence to ensure the paths are configured correctly, and the noise measuring systems are applied correctly. In fact, the experimenter is generally present at the radio science subsystem control point to ensure all goes well during each pass. The opportunity for future operations in all of this might be that configurations that optimize the antennas for the collection of science data needs to be considered as part of the overall control architecture of a tracking station. The 70-meter antenna's fundamental job is to provide command, telemetry and tracking, but by its very nature and precision, it is an ideal instrument for science[1].

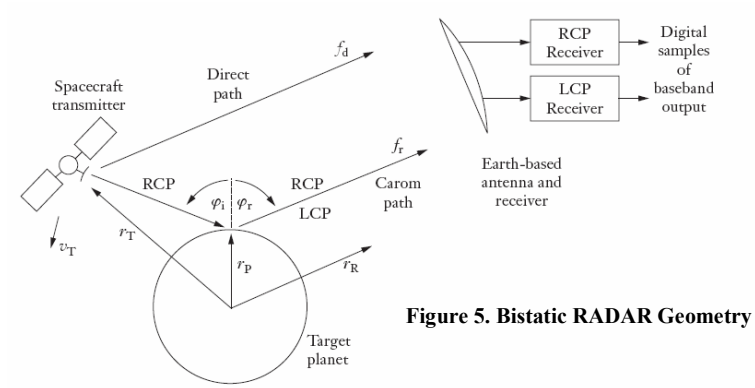

Figure 5. Bistatic RADAR Geometry

Bistatic radar experiments have been conducted at both Mars and Venus with great success[7]. The Mars Express bistatic experiments continue as spacecraft resources and target opportunities become available. Unfortunately, the Venus Express effort has met an untimely end. An anomaly in the S-band subsystem has caused a 15 dBm loss of S-band power on High Gain Antenna 1 (HGA1), making dual frequency experiments useless. Because of a spacecraft design consideration, S-band is not available on the backup high gain antenna (HGA2). (See Figure 3) In fact one pass was conducted with the degraded signal but post processing could not reveal any surface reflections. Without the dual frequency capability of simultaneous S and X band transmissions, the scientific value of further bistatic efforts is lost. Note that occultation data continue to be collected with the VEX X-band spacecraft signal.

III. Radio Science Data for Gravity Acceleration and Orbit Determination

Two-way Doppler shift measurements as well as ranging measurements of a spacecraft orbiting around Mars can be used to reconstruct the orbit of the spacecraft and its time and space variations during the mission. These data are further used to provide information on global properties of Mars.

The spacecraft undergoes gravitational attractions as well as non-gravitational forces. The most important effect on the spacecraft is the static gravitational attraction of Mars, of which the value has been determined from past missions. The gravitational attraction of Mars can be represented by a gravity potential field developed in spherical harmonics. The latest spherical harmonic model of Mars' gravity field, JGM95J, has been developed up to degree and order 95 (Konopliv et al., 2006)[8]. New spacecrafts further complete this gravity field and its time variations.

A. Gravity on Targets

When using restricted harmonics up to degree and order 50, it is possible to reconstruct the residual acceleration of the spacecraft above a target and, consequently, to get information on the local crust density, the lithospheric thickness, and possible internal loading. The large mass anomaly induced by the Tharsis region is one typical example studied with Mars Express (see Beuthe et al., 2006)[9]. During the nominal mission, MEX performed about 30 successful gravity passes at pericenter. The comparison of the new MEX gravity data with the existing gravity models showed that an average over a few MEX passes gives as good results as a gravity model based on a dense coverage at higher altitude (see Beuthe et al., 2006)[9]. With the objective of distinguishing density differences of 200 kg/m^3, it is necessary to obtain a large amount of data above a region. Precision on the data themselves must be high enough so that the signal would not be imbedded in the noise. Our experience is that it is better to obtain a high signal-to-noise level, a situation improved far from the solar conjunction even if the two frequencies are used to correct the plasma effect. The shortest distance from Earth to Mars has to be considered as well for a better noise level. The amplitude of the gravity acceleration itself as produced by the target is of most importance. The higher the gravity acceleration is, the higher the signal- to-noise ratio is.

B. Time Variable Gravity Field

The process of sublimation and condensation of CO_2 in icecaps and atmosphere involved one fourth of the atmosphere over the seasons. These very large mass changes at the global scale induce changes in the gravity field as well as changes in the length-of-day of Mars. There are changes in the first coefficients of the gravity field as well as on Mars' rotation as shown in Cazenave and Balmino (1981)[10], Chao and Rubincam (1990)[11], Yoder and Standish (1997)[12], Defraigne et al. (2000)[13], and Van den Acker et al. (2002)[14], and Karatekin et al. (2006)[15]. In order to derive the time variable gravity field coefficients from the radio science observations it is necessary to model MEX motion with all gravitational and non-gravitational effects on the spacecraft included. The Belgian team has determined an accurate orbit of MEX by using the software called GINS (Géodésie par Intégration Numérique Simultanée) that has been developed by the Centre National d'Etudes Spatiales (CNES) and further adapted at the Royal Observatory of Belgium (ROB) for planetary geodesy applications. In this software the equations of motion of the spacecraft are numerically integrated on the basis of a model of all the forces acting on the spacecraft. The software simultaneously computes the partial derivatives of the Doppler and ranging tracking observables with respect to several parameters of this model that need to be determined. Gravitational (the static and the time-variable parts) and non-gravitational forces (the radiation pressure and the atmospheric drag) have been taken into account in the force budget. The non-gravitational forces are determined from a macro-model of the spacecraft (each face of the bus and the solar arrays that are subject to the forces). For the atmospheric drag, one uses a model of the density of the Martian atmosphere at high altitude and adjusts (using a scaling factor) the model for its imperfections. For the radiation pressure, one uses spatial and temporal models of the albedo and thermal emission of Mars, in addition to the solar radiation pressure (Lemoine, 2002)[16] as well as the properties of the material used on each face of the spacecraft. The orientation of the bus with respect to an inertial frame is modeled on the basis of sets of "quaternions" provided by ESOC. Since the quaternions for the orientation of the solar arrays with respect to the bus were not available, it was difficult to estimate the non-gravitational forces without an additional constraint: the solar arrays have been supposed to be oriented toward the Sun given the orientation of the bus. In a future experiment it would be very valuable to obtain the quaternions of the solar panels in addition to those of the bus. In addition to the atmospheric drag and the radiation pressure effects, the maneuvers as well as the Wheel off-loading (WoL) events must be taken into account in the modeling. Such events produce changes in the velocity (or delta-V) of the spacecraft. The WoL usually occurs once per day and at high altitude phases of the orbit. These events are difficult to reconstruct if they are not tracked from the Earth. Because it is important to obtain them, if a high-accuracy orbit

for the spacecraft is wanted, the maneuvers and WoL events are tracked by the ground stations. This is not always possible as it depends on the availability of the ground stations shared by the different space missions. For Mars Express, this was, in fact, the main limitation of the orbit precision. The only way to correctly derive the gravitational field and its time variations from the Doppler and ranging data of a spacecraft is, indeed, to be able to properly model the non-gravitational changes in the orbit.

C. Phobos Flybys and Phobos Effects on MEX Orbit

The tracking data from Mars Express have also been used for getting information on Phobos mass from flybys of the spacecraft. These flybys have to be performed when the spacecraft is very close to the moon (less than 100-200 km) and enough tracking data around the flyby must be taken in order to be able to reconstruct the trajectory and assess the gravitational perturbation of Phobos. At present, we have only one flyby of Phobos at 460km. At this step and at such a distance, it must be mentioned that the relative position of the Earth is important for the precision on the reconstructed orbit: The Earth-Mars line-of-sight must maximize the sensitivity. It is also important to have information on the orbit from tracking on either side of the flyby event.

In parallel, the high eccentricity of MEX orbit provides a high sensitivity to the cumulative effects of Phobos. Indeed, Phobos , in addition to the planet Mars, exerts a gravity perturbation on the spacecraft's orbit. Phobos, and to a minor extent Deimos, induce a secular drift of the orbital elements of the spacecraft. This has allowed Konopliv et al. (2006)[8] to estimate the GM of Phobos and Deimos from the MGS and Odyssey data, although the sensitivity is not very high. The higher eccentricity orbit of the MEX orbit has allowed Rosenblatt et al. (2008)[17] to determine these GM with a better precision. An accurate MEX orbit determination has indeed been obtained by fitting tracking and ranging radio data from MEX and therewith, the GM of Phobos has been determined.

IV. Conclusion

Opportunities abound for radio science observations. By its very nature, it is an opportunistic discipline because specific resources to conduct radio science experiments do not have to be extensive. The ability to collect data on planetary environments over extended mission time-lines, can provide a wealth of information on trends, which a few samples over a short time cannot. However, this makes the discipline too easy to treat as a science afterthought. The configuration of the telecommunications system on board the spacecraft with radio science in mind can easily multiply its return. A USO on MEX could have captured both ingress and egress occultation periods. An S-band feed on HGA2 on the backup transponder for VEX could have prevented the loss of bistatic radar data that had shown great promise with it initial observations of Maxwell Monte. And finally, tracking stations are great observatory assets. The sensitivity and timing accuracy necessary for deep space tracking also makes them extremely valuable as an instrument for science. Unfortunately, national funding constraints keep the resources for radio science limited. Economically, one should consider the fact that the cost of an instrument on board a spacecraft is a "sunk" cost, and the instrument is lost forever at the conclusion of the mission. Instruments on the ground are accessible and available to many projects, and with equivalent investment can provide a continued return on investment.

Acknowledgments

The authors would like to thank the various international organizations listed in Table 1 for their fine support. We would also specially like to thank the operations and engineering teams within NASA's DSN and the Europeans Space Agency's Operations Center (ESOC), for without them the data could never have be taken. Within the US the Radio Science Systems Group for its continued dedication to validating and delivering the data. Finally the ESA MEX and VEX projects themselves for their support of this unique discipline. The work of the Belgian partners was financially supported by the Belgian PRODEX program managed by the European Space Agency in collaboration with the Belgian Federal Science Policy Office. Some of the research described in this paper was carried out at the Jet Propulsion Laboratory, California Institute of Technology, under a contract with the National Aeronautics and Space Administration.

References

1. N. A. Renzetti, A.L. Berman, *The Deep-Space Network – An Instrument for Radio Science Research,* NASA, Jet Propulsion Laboratory, California Institute of Technology, Pasadena California; JPL Pub 80—93, 15 February 1981
2. R. Martein and M. Warhaut, *ESA's 35-Meter Deep Space Antennas at New Norcia/Western Australia and Cebreros/Spain*, IEEEAC paper #1294, Version2, Updated December 3, 2003
3. R. Madde, T. Morely, M. Lanucara, R. Abello, M. Mercolino, J. DeVincente and G. Sessler *A Common receiver Architecture for ESA Radio Science and Delta DOR Support*, Proceedings of the IEEE,Vol 95, No. 11, November 2007
4. 820-013, Deep-Space Mission System (DSMS) External Interface Specification, JPL D-16765, *0159-Science- Radio Science Receiver Standard Formatted Data Unit (SFDU),* 28 February 2001
5. N. James, *IFMS ICD for IFMS ESU Datasets*, BAE Systems Advanced Technology Centre, West Hanningfield Road, Chelmsford, Essex, CM2 8HN, Great Britain, 18 January 2006.
6. R. A. Simpson, "Planetary Exploration," Chapter 5 in *Advances in Bistatic Radar,* edited by N. C. Willis and HGriffiths. Raleigh, North Carolina: SciTech Publishing, 650 p., 2007
7. R. A. Simpson, G. L. Tyler, Martin Paetzold, and Bern Hausler, 2006 "Determination of Local Surface Properties Using Mars Express Bistatic Radar" J. Geophysical Res., 111, doi: 10.1029/2005JE002580.
8. Konopliv A., Yoder C., Standish E.M., Yuan Dah-Ning, and Sjogren W.L., 2006, A global solution for the Mars static and seasonal gravity, Mars orientation, Phobos and Deimos masses, and Mars ephemeris, Icarus, 182(1), 23-50, 10.1016/j.icarus.2005.12.025.
9. Beuthe M., Rosenblatt P., Dehant V., Barriot J.-P., Pätzold M., Häusler B., Karatekin Ö., Le Maistre S., and Van Hoolst T., 2006, "Assessment of the Martian gravity field at short wavelength with Mars Express.", Geophys. Res. Letters, 33, L03203, DOI: 10.1029/2005GL024317.
10. Cazenave A. and Balmino G., 1981, Meteorological effects on the seasonal variations of the rotation of Mars, Geophys. Res. Letters, 8, 245-248.
11. Chao B.F. and Rubincam D.P., 1990, Variations of Mars gravitational field and rotation due to seasonal CO_2 exchange, J. Geophys. Res., 95, 14755-14760.
12. Yoder C.F. and Standish E.M., 1997, Martian moment of inertia from Viking lander range data, J. Geophys. Res., 102 (E2), 4065-4080
13. Defraigne P., de Viron O., Dehant V., Van Hoolst T., and Hourdin F., 2000, Mars rotation variations induced by atmospheric CO_2 and winds, J. Geophys. Res. (Planets), 105, E10, 24563-24570.
14. Van den Acker E., Van Hoolst T., de Viron O., Defraigne P., Dehant V., Forget F., and Hourdin F., 2002, Influence of the winds and of the CO_2 mass exchange between the atmosphere and the polar ice caps on Mars' orientation parameters, J. Geophys. Res., 10.1029/2000JE001539.
15. Karatekin Ö., Dehant V., and Van Hoolst T., 2006, "Martian global-scale CO2 exchange from time-variable gravity measurements.", J. Geophys. Res., 111, E06003, DOI: 10.1029/2005JE002591.
16. Lemoine F.G., Smith D.E., Rowlands D.D., Zuber M.T., Neumann G.A., Chinn D.S., and Pavlis D.E., 2001, An improved solution of the gravity field of Mars (GMM-2B) from Mars Global Surveyor, J. Geophys. Res., 106(E10), 23359-23376, DOI: 10.1029/2000JE001426.
17. Rosenblatt et al., 2008, Accurate Mars Express orbits to improve the determination of the mass and ephemeris of the Martian moons, Planet. Space Sci., doi: 10.1016/j.pss.2008.02.004.